REGULAR MEETING OF THE LADY LAKE TOWN COMMISSION

DATE: **Monday, May 16, 2016**
TIME: **6:00 p.m.**
PLACE: **Town Hall Commission Chambers**
409 Fennell Blvd., Lady Lake, Florida

ALL INTERESTED PERSONS ARE CORDIALLY INVITED TO ATTEND THIS PUBLIC MEETING

AGENDA*

A. CALL TO ORDER: Mayor Ruth Kussard

B. PROCEDURAL: *Citizens are encouraged to participate in the Town of Lady Lake meetings. Speakers will be limited to three (3) minutes. Additional time may be granted by the Mayor. Citizen groups are asked to name a spokesperson and the Mayor, at his/her discretion, may allow longer than three minutes. Upon being recognized by the Mayor, please approach the dais, state your name and address, and speak into the microphone. The order of agenda items may be changed if deemed appropriate by the Town Commission. Please be respectful of others and put your cell phone on silent mode.*

C. PLEDGE OF ALLEGIANCE: Mayor Ruth Kussard

D. INVOCATION[1]: Pastor Keith Johnson, Chapel of Christian Faith

E. ROLL CALL

F. PUBLIC COMMENTS[2]

G. PROCLAMATION:

1. Proclaiming May 27th & 28th, 2016 as "Poppy Days" in the Town of Lady Lake (Mayor Kussard/Carol Pirone-Udell - American Legion Auxiliary Unit 347) (Pg. 4)

H. CONSENT[3]:

2. Minutes – May 2, 2016 – Commission Workshop Meeting (Pg. 5)
   – May 2, 2016 – Regular Commission Meeting

3. Consideration for Approval of a "Food for Fines" Program Sponsored by the Lake County Library System from May 16-28, 2016 (Marsha Brinson) (Pg. 29)

I. OLD BUSINESS

J. NEW BUSINESS:

4. Consideration of the SPRG of Florida Lady Lake Outpatient Clinical Building Major Site Plan - Phase I – MJSP 03/16-002 – A Development Proposing a 26,540-Square-Foot Multi-Specialty Medical Facility to be Constructed Along Rolling Acres Road on a +/- 9.77-Acre Parcel – Located at 539 Rolling Acres Road (Thad Carroll) (Pg. 33)

5. Consideration of Contract Award to Construct the Final Phase of Wastewater Treatment Plant No. 2 Aeration Improvements (Bid No. 2016-0002) (C.T. Eagle) (Pg. 120)

K. TOWN ATTORNEY'S REPORT:

6. Resolution No. 2016-104 – First/Final Reading – Declaration of Qualifying Dates for the Office of Town Commissioner for Wards Two and Four for the November 8, 2016 General Election, and Authorization to Request that the Lake County Supervisor of Elections Conduct the Election (Nancy Slaton) (Pg. 124)

7. Ordinance No. 2016-11 – Second/Final Reading – Annexation – The Villages of Lake-Sumter, Inc., John and Patricia Porto, and Pamela A. Barsness – from Lake County Medium Urban Density to Lady Lake Manufactured Home High Density for Five Lots Consisting of Approximately 0.64 +/- Acres of Land, Located in Orange Blossom Gardens Unit, 1, 3 and 3.1b. (Thad Carroll) (Pg. 126)

8. Ordinance No. 2016-12 – Second/Final Reading – Small Scale Future Land Use Comprehensive Plan Amendment – The Villages of Lake-Sumter, Inc., John and Patricia Porto, and Pamela A. Barsness – from Lake County Medium Urban Density to Lady Lake Manufactured Home High Density for Five Lots Consisting of Approximately 0.64 +/- Acres of Land, Located in Orange Blossom Gardens Unit, 1, 3 and 3.1b. (Thad Carroll) (Pg. 168)

9. Ordinance No. 2016-13 – Second/Final Reading – Rezoning – The Villages of Lake-Sumter, Inc., John and Patricia Porto, and Pamela A. Barsness – Rezoning from Lake County Residential Medium (RM) to Lady Lake Mixed Residential Medium Density (MX-8) for Five (5) Lots of Approximately 0.64 +/- Acres – Located within Located Within Orange Blossom Gardens Units 1, 3, And 3.1b. (Thad Carroll) (Pg. 223)

10. Ordinance No. 2016-17 – First Reading – Revisions to the Land Development Regulations Chapter 17, Sign Regulations; Amending Sections 17-2. - Permitting Requirements, 17-3. - General Requirements, 17-4. - Permanent Signs, and 17-5. Temporary Signs (Thad Carroll) (Pg. 260)

L. TOWN MANAGER'S REPORT:

M. MAYOR/COMMISSIONER'S REPORT:

N. PUBLIC COMMENTS[4]

O. ADJOURN

***Back up for agenda items is available on the Town's website at www.ladylake.org or contact the Town Clerk at (352) 751-1571.**

This public hearing is being conducted in a handicapped accessible location. Any handicapped person requiring an interpreter for the hearing impaired or the visually impaired should contact the Clerk's Office at least two (2) days prior to the meeting and an interpreter will be provided. To access a Telecommunication Device for Deaf Persons (TDD), please call (352) 751-1565. Any handicapped person requiring special accommodations at this meeting should contact the Clerk's Office at least two (2) days prior to the meeting.

Advice to the Public: If a person decides to appeal a decision made with respect to any matter considered at the above meeting or hearing, he may need a verbatim record of the proceedings including the testimony and evidence, a record of which is not provided by the Town of Lady Lake. (F.S. 286-0105)

Please be advised that one or more members of any other Town Board or Committee may be in attendance of this meeting.

NS/Word/Town Clerk/Agendas - Commission Meeting – 05-16-2016

---

[1] *Any invocation that may be offered before the official start of the Commission meeting shall be the voluntary offering of a private citizen, to and for the benefit of the Commission. The views or beliefs expressed by the invocation speaker have not been previously reviewed or approved by the Commission, and the Commission is not allowed by law to endorse the religious beliefs or views of this, or any other speaker.*

[2] *This section is reserved for members of the public to bring up matters of concern or comments. It is not limited to items on the agenda and it is open to any concern or comments that the public may have.*

[3] *All items listed under consent are considered routine by the Town Commission and will be enacted by one motion. There will be no separate discussion of these items unless a Town Commissioner so requests, in which event the item will be removed from the consent agenda and considered in its normal sequence.*

[4] *This section is reserved for members of the public to bring up matters of concern or comments. It is not limited to items on the agenda and it is open to any concern or comments that the public may have.*

G-1

Proclamation

Whereas: The poppy, as a memorial flower for the American war dead, is a tradition which began in the years following the First World War; and

Whereas: Veterans returning to their homes in this country after World War I remembered the wild poppies which lined the devastated battlefields of France and Flanders Field; and

Whereas: The poppy is a symbol of hope for all veterans who served this great country through military service; and

Whereas: The American Legion Auxiliary adapted the poppy as its memorial flower to pay tribute to the war dead and aid the living veterans and their families; and

Now, Therefore, I, Ruth Kussard, Mayor of the Town of Lady Lake, Florida, do hereby proclaim the dates of **May 27th and May 28th, 2016** as

"Poppy Days"

and urge all citizens to pay tribute to those who have made the ultimate sacrifice in the name of freedom by wearing the Memorial Poppy on these days.

In Witness Whereof, I have hereunto set my hand and caused the Official Seal of the Town of Lady Lake to be affixed this 16th day of May, 2016.

Ruth Kussard

Ruth Kussard, Mayor

ATTEST:

Kristen Kollgaard

Kristen Kollgaard, Town Clerk

H-2

MINUTES OF THE SPECIAL WORKSHOP MEETING
OF THE LADY LAKE TOWN COMMISSION
LADY LAKE, FLORIDA
May 2, 2016

The Special Workshop Meeting of the Lady Lake Town Commission was held in the Commission Chambers at Lady Lake Town Hall, 409 Fennell Blvd., Lady Lake, Florida with Mayor Ruth Kussard presiding. The meeting convened at 4:30 p.m.

1. CALL TO ORDER

2. ROLL CALL:

Tony Holden, Commissioner Ward 2
Dan Vincent, Commissioner Ward 3
Paul Hannan, Commissioner Ward 4
Jim Richards, Commissioner Ward 5
Ruth Kussard, Mayor/Commissioner Ward 1

STAFF MEMBERS PRESENT: Kris Kollgaard, Town Manager John Pearl, I.T. Director; C.T. Eagle, Public Works Director; Pam Winegardner, Finance Director; and Nancy Slaton, Deputy Town Clerk

3. Discussion/Consideration of a Fiber Wide Area Network (FiberWAN) (John Pearl)

I.T. Director John Pearl began by stating that he is not suggesting that this concept is certain to be the right way forward for the Town. He stated the desired outcome of this workshop is to answer or promise to answer any questions asked by the Commission, and to receive a decision on whether to bring a strategic broadband plan proposal (by Magellan) before a future Commission meeting.

Mr. Pearl stated his outline of important points for discussion at this workshop include the benefits of a FiberWAN, an incremental approach to municipal fiber network construction, avoiding debt to finance, and municipal broadband design and technical plan deliverables. He began by reviewing the benefits:

1. Expanded innovation opportunities, providing positive economic and social impact to the local economy.

Mayor Kussard asked whether the SCADA system that is in place now will utilize this, and if it will only be available right now to Town properties, not commercial areas or residents. She asked if there are problems with the current SCADA system.

Mr. Pearl replied that the concept is to replace the current RF (radio frequency) SCADA system with a fiber system. He stated there are no current problems, but this ties into his second point:

2. Improved connectivity, capability, reliability and security of current Town-wide area and SCADA networks. An estimated 20 to 40% improvement in SCADA network reliability and significant improvements in Town Hall WAN performance, ability to reduce and simplify current configuration. Improved reliability and capability of the current Town-wide area and SCADA networks.

DRAFT

Mr. Pearl noted that he is not stating that this alone justifies the expense, although there would be improvements as it would not be subject to atmospheric issues such as lighting, sun spots, etc.

Town Manager Kris Kollgaard clarified that this network is not replacing the current SCADA system.

Mr. Pearl explained that the current SCADA system gives the ability to control and read the telemetry data coming from the Town's water and wastewater plants, and lift stations; giving real time data and allowing staff to monitor the conditions at these facilities. He stated the current system is adequate and uses the Town's area-wide network.

Mayor Kussard asked if the Town were to proceed with laying the fiber optics, would it also need to hook up with an internet provider at an additional cost.

Mr. Pearl replied that there would be phases and an initial phase of the proposal is a municipal WAN, which would serve to connect all of the Town's facilities and SCADA, allowing the Town to reduce the amount of commercial services it currently contracts with as well as additional benefits. He stated it would be municipal internet connection only (a dark fiber deployment), with no ability to sell internet services to others.

Mayor Kussard asked if the Town would have this right away if it put the fiber in the ground.

Mr. Pearl replied that if the proposal was done by Magellan, it would outline the segments that the Town does not currently have. He stated he anticipates that it would follow all the water infrastructure as closely as possible to avoid additional expense. He stated the reason this came forth at this time is the anticipation of the upcoming major road projects which would allow cost saving opportunities if the Town chooses to do so.

Mayor Kussard stated that the proposed widening of US Hwy 27/441 is not scheduled until 2019. She asked how it would work if the proposal is to take five years to pay for the project if it is done, since the widening is proposed in three years.

Ms. Kollgaard asked if the five years is for phase one or all the phases.

Mr. Pearl replied that the proposal is five years for phase one. He stated there are two philosophies for building a FiberWAN; pay for it all at once and build it, or be patient and build as you can afford it with the long view in mind.

Mayor Kussard asked about the estimated costs of this project, and Mr. Pearl reviewed the costs and scenarios of the phases.

Mayor Kussard stated that Leesburg sells its FiberWAN internet services to customers and it is very expensive.

Commissioner Hannan commented that it would probably be more expensive for the Town to do it as Leesburg owns their own utility.

Mr. Pearl stated it is the opinion of many of his peers that Leesburg is overpriced because they have no competition for their services. He stated he received a quote for a 20-year lease

DRAFT

for a dark fiber pairing between public works and Town Hall at $262,000, and it was already in the ground.

Commissioner Vincent stated he would like to see the Town put the conduit down at the very least, if not to include the fiber in the ground, to take advantage of the digging during the road widening. He stated the rents for the fiber is very high and new development may take advantage of this, such as a big medical facility.

Mr. Pearl commented that Leesburg has 185 miles of fiber in the ground and they have a lot of operational costs, which may be why it is so expensive. He stated it is an expensive concept, but the Town's deployment would be very compact and operational costs would be much less.

Ms. Kollgaard clarified that the Town would not be able to resell services until phase two.

Mr. Pearl stated that the cost savings between putting in a 12 strand fiber and a 288 strand fiber is $2.50/ft. He stated this is why most suggest overbuilding at this negligible cost.

Ms. Kollgaard asked if there is a cost estimate for phase two.

Mr. Pearl replied that he does not have one, although he could review plans of other municipalities who have entered into phase two to try and see where there might be a conceptual overlap. He stated he does not know what phase two would look like as it is speculative at this time, and this proposal is in anticipation of growth and diversification.

Mayor Kussard stated that everyone seems to be using wireless (WiFi), and asked if it will continue.

Mr. Pearl replied that WiFi speeds are increasing and he sees it as a complimentary piece to a broadband network with anticipated growth in wireless technology needing fast bandwidth.

Commissioner Richards stated that he would like to see more of the business plan of the Leesburg model since they have been in business 13 years with their FiberWAN network. He stated he likes to pay as you go and does not like to speculate more than a little bit.

Commissioner Hannan stated his biggest concern is putting all this money out without knowing when there will be payback - perhaps five to fifteen years later, and whether the Town would borrow it or use what is available. He stated the Town is currently in good financial shape, and the RF network is working fine.

Mayor Kussard stated the Town would not borrow money for this, but would phase it over five years if the plan were approved.

Mr. Pearl stated the current system is adequate for current technology, but the Town does not have adequate infrastructure for things such as video surveillance systems.

Dan Bard, audience member, asked how much phase one will cost.

Mayor Kussard replied that the estimated cost for conduit alone would be $497,984.19, or $99,596.84 per year split over five years. If the Town chose to install conduit and fiber, the

DRAFT

estimated cost is $896,371.55, or $179,274.51 per year over five years; with the other option coming in at just under $2,000,000.

Mr. Pearl stated that was the estimated costs if infrastructure is in place and it would have to be dug under, after the road was completed.

Commissioner Vincent stated he feels the Town should take advantage of the road widening and should not let this opportunity go by.

Commissioner Richards stated he would like to see a cost benefit analysis before making a decision.

Commissioner Hannan asked if there is a possibility of having a commercial business like Brighthouse or Comcast pay for this as it would benefit them as much as the Town. He asked if some sales could be made with phase one.

Mr. Pearl replied that he can ask.

Commission Richards stated there may be a possibility for partnering with someone along with a guaranteed contract, and they could sell off the rest.

Ms. Kollgaard stated they would almost have to partner for the whole project, as no one would partner without sales being involved.

Mayor Kussard commented that the Town is almost debt free at this time and she would not approve any type of loan for this project.

Commissioner Richards stated there would be some paybacks in phase one in avoided costs such as the $20,000 a year for internet and phone services. He stated there appears there would be some improved efficiency for SCADA as well.

Public Works Director C.T. Eagle commented that the SCADA system is adequate and stable for the most part, except when atmospheric conditions interfere. He stated that if the equipment gets zapped, it could cost anywhere from $50 to $2,000. He stated that Public Works staff love redundancy and many municipalities across the county have utilized fiber connecting the SCADA system telemetry, and he would like to see it as well. He mentioned that the utility portion only could be impact fee eligible. Mr. Eagle stated that increased bandwidth with fiber optics would be good, and would be necessary to tie in security systems, etc.

Commissioner Hannan commented that the Town would be creating another utility if they started selling it.

Mr. Pearl stated there are at least 20 accepted business models for how to do this.

Commissioner Hannan asked if this worked out well with a commercial partner, would the rates likely be raised.

Mr. Pearl replied that when the business models go live, the rates of commercial vendors normally drop to be competitive. He stated this has bankrupted some municipalities who

DRAFT

speculated on elaborate payback, with Dunnellon being an example. He stated if the Town decided to build a municipal WAN, and overbuilt it, it would position the Town to begin entertaining potential business models in five years. Mr. Pearl stated he cannot answer questions or quantify how much income can be generated, as the current top ten employers are contracted nationally.

Mayor Kussard asked Mr. Eagle how long ago the Town got the SCADA system and how much it cost.

Mr. Eagle replied that the SCADA system was installed shortly after 2008 and was expensive. He stated it would remain if this project was put in place, but would connect to FiberWAN instead of RF.

Mr. Pearl stated that if the Commission believes that bandwidth demands for the Town and community will continue an aggressive upswing, and access to fast bandwidth may be a competitive differentiator for businesses, then this project is how to address that concern; put in access to fast bandwidth infrastructure slowly over time.

Mayor Kussard stated the Town would still have to pay for internet services even if fiber optics were put in.

Mr. Pearl replied that this is not the case; several options are available. The best option is that the Town could trade fiber with the technical services group in The Villages at Hwy 466 and get across The Villages to Wildwood to a pairing location there which would allow the ability to re-sell internet at that point. Different business models would then need to be entertained, either directly as a utility, or through a third party partnership, etc. He stated Winter Haven is a good example. They have recently partnered with a third party two tier provider and have begun re-selling internet services, with $10,000 to $12,000 revenue being generated each month. Mr. Pearl stated this is after 12 years without debt, taking it slow. He stated Clermont has been putting conduit in the ground for eight years and took the long view as well. He stated it is his opinion that not putting conduit in the ground during road or utility projects is an opportunity lost.

Mayor Kussard asked when the Town would begin this if it was approved.

Mr. Pearl replied that his hope would be for the Town to consult with this company, Magellan, to get a professional plan done and consider the best options in the plan. He stated he is not sure how the timing with a road project would sequence best, although it would need to be worked out with the FDOT.

Ms. Kollgaard asked the cost for Magellan to complete the plan.

Mr. Pearl replied it would cost $20,000 to have the plan done.

Commissioner Hannan asked how many businesses may consider buying broadband from the Town if this was done.

Commissioner Richards asked how many are buying from Leesburg.

DRAFT

Mr. Pearl replied that Leesburg has shared some information, but not their capacity. Leesburg has the school system and contributes six figures to the general fund each year. He stated Leesburg has been in the green since the second year of their project, and has some revenue from the E-Rate program for the schools and libraries which is a federal program.

Commissioner Hannan commented again that he feels only high end medical facilities would be interested in purchasing this service, but not mom and pop stores.

Mr. Pearl agreed with him on this issue, stating there is a general trend upward for bandwidth consumption for audio and video services for new stores coming in, as well as medical offices, etc. He stated this project would provide a competitive environment to drive the cost down.

Mayor Kussard stated she would like more information, especially from the Leesburg model, before making a decision if the other Commissioners agree.

Mr. Bard asked when would the Town be getting payback for the taxpayers' money spent if this was put in over a five-year plan. He mentioned that taxes might be raised.

Mr. Pearl replied that if the Town could connect during the first year, redundant costs of approximately $20,000 per year could be saved.

Ms. Kollgaard stated that raising taxes has not been mentioned and agreed that taxpayers would most likely say no if it was put to vote. She stated that staff will do a cost analysis and will try to obtain more information regarding the Leesburg model, and another workshop will be held as a decision on this does not have to be made right away.

4. ADJOURN: There being no further discussion; the meeting was adjourned at 5:24 p.m.

Kristen Kollgaard, Town Clerk

Ruth Kussard, Mayor

Minutes transcribed by Nancy Slaton, Deputy Town Clerk

DRAFT

MINUTES OF THE REGULAR MEETING
OF THE LADY LAKE TOWN COMMISSION
LADY LAKE, FLORIDA

May 2, 2016

The regular meeting of the Lady Lake Town Commission was held in the Commission Chambers at Lady Lake Town Hall, 409 Fennell Blvd., Lady Lake, Florida with Mayor Ruth Kussard presiding. The meeting convened at 6:00 p.m.

A. CALL TO ORDER: Mayor Ruth Kussard

B. PROCEDURE: *Citizens are encouraged to participate in the Town of Lady Lake meetings. Speakers will be limited to three (3) minutes. Additional time may be granted by the Mayor. Citizen groups are asked to name a spokesperson and the Mayor, at his/her discretion, may allow longer than three minutes. Upon being recognized by the Mayor, please approach the dais, state your name and address, and speak into the microphone. The order of agenda items may be changed if deemed appropriate by the Town Commission. Please be respectful of others and put your cell phone on silent mode.*

C. PLEDGE OF ALLEGIANCE

D. INVOCATION: Reverend Gary Cantrell, New Covenant Church

E. ROLL CALL: Tony Holden, Commissioner Ward 2
Dan Vincent, Commissioner Ward 3
Paul Hannan, Commissioner Ward 4
Jim Richards, Commissioner Ward 5
Ruth Kussard, Mayor/Commissioner Ward 1

STAFF MEMBERS PRESENT: Kris Kollgaard, Town Manager; Derek Schroth, Town Attorney; Thad Carroll, Growth Management Director; C. T. Eagle, Public Works Director; John Pearl, I. T. Director; Chief Chris McKinstry, Captain Jason Brough, Retired Officer Jimmy Thomas, and Jan Miller, Police Department; Pam Winegardner, Finance Director; Julia Harris, Administrative Assistant to Town Manager; and Nancy Slaton, Deputy Town Clerk

F. PUBLIC COMMENTS: Mayor Kussard asked if there were any comments at this time.

- Lanny Husebo introduced himself as representing the medical surgical facility proposed to be developed on Rolling Acres Road. He stated they are in the process of talking with the county regarding the problems with the road, as well as with Town staff. He showed a rendering of the modern, state of the art facility that is proposed.

G. PROCLAMATION:

1. <u>Proclaiming the Month of May 2016 as Law Enforcement Appreciation Month (Mayor Kussard/Chief Chris McKinstry)</u>

Mayor Ruth Kussard read the proclamation proclaiming the month of May 2016 as Law Enforcement Appreciation Month and presented it to Police Chief Chris McKinstry.

H. PRESENTATION:

2. Retirement of Officer Jimmy Thomas (Chief Chris McKinstry)

Police Chief Chris McKinstry reported that Officer Jimmy Thomas has retired from the Lady Lake Police force. He read a statement regarding everyone's affection for and appreciation of his hard work over the years, and presented Mr. Thomas with a display case that included his police badge, I.D. card and service weapon as a retirement gift from the Town and as an expression of gratitude for his service.

I. CONSENT:

Mayor Kussard asked if there were any questions or comments on the Consent items, and hearing none, asked for a motion.

3. Minutes – April 18, 2016 – Special Commission Workshop Meeting
– April 18, 2016 – Special (Conceptual Workshop) Commission Meeting
– April 18, 2016 – Special Commission Meeting
– April 18, 2016 – Regular Commission Meeting

Upon a motion by Commissioner Richards and a second by Commissioner Holden, the Commission approved Consent Item #I-3 by a vote of 5 to 0.

J. OLD BUSINESS:

4. Consideration of Lumen Park LLC's Request to Hold a TEFRA Hearing Along with a Resolution of Support (Kris Kollgaard)

Town Manager Kris Kollgaard gave the background summary for this agenda item (on file in the Clerk's office). She stated that the Town Attorney has been researching this issue with the Commission's approval (received at the April 18, 2016 Commission meeting), and she asked him to discuss the information received for the Commission's consideration at this meeting.

Town Attorney Derek Schroth stated he forwarded the email to the Commissioners that showed the bond attorney had been retained and paid for by the applicant. The bond attorney asserted there would be no liability for the Town and they could advertise that the bonds were Town approved, as there is no prohibition against that, but perhaps the applicant could agree not to do that if there was concern. Mr. Schroth stated the reason the bonds were turned down by the county is because the amount of the bonds was reduced to as low as $25,0000 and needed to be at least $100,000 by their regulations. Additional language for the protection of the Town was added to the resolution by the bond attorney as well. Mr. Schroth stated this matter is at the Commission's discretion, although he was told if there was no bond approval, the project may not go through as they need this financing to proceed.

Commissioner Richards asked if the applicant could explain why it is necessary for the Town to approve the bonds.

Ms. Kollgaard stated the TEFRA hearing is a requirement by the IRS.

Mr. Schroth added that there needs to be some form of government approval for the applicant to get their exemption status for tax-free exempt municipal bonds.

DRAFT

Darren Azdell of OutsideIn Architecture agreed that there is a portion of that bond entitlement that is tax-free exempt bonds, which will keep the interest rates lower. It allows the applicant to have a facility that markets to a lower income not currently being served in the community and insures that 20% of the units will be set aside for low income users.

Mayor Kussard asked what bond denominations will be issued. She asked why the amount for the project increased from $44,000,000 to $46,000,000.

Mr. Azdell replied the bond denominations will be as low as $25,000 and any burden will be taken by the Capital Trust Agency for any risk. He also stated they adjusted the unit counts and wanted to adjust the size of their structure now to create a buffer, as they cannot go back and ask for more after the fact.

Mayor Kussard asked if the applicant has a Plan B if they do not sell their bonds. She stated she checked out the agencies involved such as Omega, Greenbriar, and Capital Trust Agency over the weekend and they have projects in the works that are impressive.

Mr. Azdell replied they have a purchaser who will purchase the bonds if they are not purchased locally, and they have expressed strong interest in this project, as well as other projects that they have done. He stated another benefit is that there is a certain amount of tax bonds set aside for the community, and the Capital Trust Agency purchased bonds last year, and these will be used rather than taking from the pool of bonds for this year.

Commissioner Richards commented that he now understands the request to the Town for tax exempt bonds for the building as it will be for the public good to make it cheaper overall.

Mr. Azdell stressed that this is a for-profit facility that will pay taxes.

The attorney for the applicant clarified that what they are requesting is permission to publish the notice to hold a TEFRA hearing and have that TEFRA hearing at the Commission's first meeting in June. She stated the Commission would then approve or deny the bonds for purpose of TEFRA only, based on the public's response.

Mayor Kussard asked what would happen if the public reacted unfavorably.

The attorney replied it would be up to the Commission's discretion as the IRS does not require that the jurisdiction disapprove the project for TEFRA purposes if there is negative public response, they only require that there be a public hearing. Meeting minutes are submitted to the IRS when the bonds close to prove this has happened.

Ms. Kollgaard clarified that this is done by resolution and that the resolution should be prepared for the first meeting in June as well.

Mr. Azdell stated they will be available if there are any other questions regarding this.

Upon a motion by Commissioner Richards and a second by Commissioner Vincent, the Commission approved Lumen Park LLC's Request to Hold a TEFRA Hearing Along with a Resolution of Support by a vote of 5 to 0.

5. <u>Selection of the Advertisement for the Special Conference Issue of "Quality Cities" for the 2016 Florida League of Cities Conference (Kris Kollgaard)</u>

Town Manager Kris Kollgaard gave the background summary for this agenda item (on file in the Clerk's office). She stated that at the April 18th meeting, the Town Commission approved placing a quarter page ad in the special conference issue of "Quality Cities". Staff has prepared four ads for the Commission's review and selection.

Commissioner Hannan asked that the word "the" be removed before "Town of Lady Lake". He read a prepared statement regarding the benefits the Florida League of Cities provides to the Town. He challenged the Commission to increase the ad to a half page ad.

Commissioner Richards stated that the Town is a paid member of the Florida League of Cities and also pays to be in the Mayor's League. He stated the Town is supportive and also pays to send people to the conferences. This ad will be in a booklet circulated at the conference and he stated he is happy with a quarter page ad. He picked #1 of the four ad examples.

It was the consensus of the Commission to go with Ad #1 as a quarter page ad.

K. NEW BUSINESS:

6. Consideration of Partnering with the Lady Lake Driving Range for the Parking Lot Project and Consideration of Moving Forward with the Design Engineering Services (Kris Kollgaard)

Town Manager Kris Kollgaard gave the background summary for this agenda item (on file in the Clerk's office). She stated that staff has met with Bob Johnson of the Lady Lake Driving Range and discussed their request to have the parking lot paved at the Driving Range. Staff submitted the attached proposal for their consideration and they have approved it. The terms proposed, if the Commissions approves, would be the following:

- The Town will pay for the engineering design services for the parking lot improvements for an estimated cost of $13,535.00.
- We would split the cost of construction 60/40 (Town 60%).
- We will renew the lease for another 10 years upon completion of the paving of the parking lot.
- The Town and the American Legion will enter into a contract (prepared by the Town's Attorney) that will basically state that if the Town should break the lease, then the Town would give the American Legion a pro-rated refund for the remaining years left on the lease. Example: If the American Legion (with the 60/40 split) were to pay $48,000 for their share, and after five years the lease was broken by the Town, the Town would refund the American Legion $24,000, which would be the pro-rated amount for the remaining five years of the lease:
  - $48,000 divided by 10 (years) = $4,800 yearly
  - $4,800 x 5 (years)=$24,000
- If the American Legion's total cost is over $50,000, the Town would consider working with the American Legion on a payment plan.
- Staff will work with the American Legion/Lion's Club to make sure that they have input on this project.

Ms. Kollgaard stated that at this time, if the Commission would like to move forward with this project, staff is requesting approval to begin the first step which is to have the engineering done. The firm of Neel-Schaffer, Inc. has submitted a quote for the engineering in the amount of $13,535.00 under their continuing service contract with the Town.

DRAFT

Commissioner Hannan asked if the Town could break the lease at any time.

Ms. Kollgaard replied that it can break the lease with notice. She stated that the current ten-year lease also has a review period every five years.

Commissioner Richards confirmed that the funds for the design engineering will come out of the contingency fund.

Upon a motion by Commissioner Holden and a second by Commissioner Richards, the Commission approved the Terms Proposed to Partner with the Lady Lake Driving Range on the Parking Lot Project by a vote of 5 to 0.

Upon a motion by Commissioner Holden and a second by Commissioner Vincent, the Commission approved to have the Engineering Design Services completed by Neel-Schaffer in the amount of $13,535.00 for the paving of the Driving Range parking lot by a vote of 5 to 0.

L. TOWN ATTORNEY'S REPORT:

7. Ordinance No. 2016-11 – First Reading – Annexation – The Villages of Lake-Sumter, Inc., John and Patricia Porto, and Pamela A. Barsness – from Lake County Medium Urban Density to Lady Lake Manufactured Home High Density for Five Lots Consisting of Approximately 0.64 +/- Acres of Land, Located in Orange Blossom Gardens Unit, 1, 3 and 3.1b. (Thad Carroll)

Town Attorney Derek Schroth read the ordinance by title only.

Growth Management Director Thad Carroll gave the background summary for this agenda item (on file in the Clerk's office). He stated that the applicant, Martin L. Dzuro, on behalf of the Villages of Lake-Sumter, Inc., John and Patricia Porto, and Pamela A. Barsness, has filed applications to annex properties consisting of five lots located north of Griffin Avenue and northeast of North Highway 27/441 within the Orange Blossom Garden Subdivisions Units 1, 3, and 3.1B. The annexation application involves 0.64 +/- acres of property from unincorporated Lake County into the Town of Lady Lake.

Mr. Carroll stated the five lots are spread out along different roads and include the following addresses:

- 1026 Aloha Way
- 803 Aloha Way
- 811 Truman Avenue
- 815 Royal Palm Avenue
- 817 Royal Palm Avenue

He stated staff recommends approval of this ordinance. A map and an aerial view of the properties was shown, as were photos of the posting of each property.

The subject properties lie in Section 06, Township 18 South, Range 24 East, in Lake County, Florida. Appropriate legal descriptions, a location map, and a sketch of the property have been included with the submitted application. All lots will be served by the Village Center Community Development District Central Water and Sewer System, as well as the District's Fire Department.

DRAFT

In accordance with the provisions of Florida Statute 171.205, and the Interlocal Service Boundary Agreement executed September 4, 2013 between Lake County, Florida and the Town of Lady Lake, Florida, the Town may annex property into the Town which are non-contiguous to the existing municipal boundary. The proposed properties under this application exist as non-contiguous lots.

The annexation application was received on Monday, February 29, 2016, and has been reviewed and determined to be complete, satisfying the necessary criteria as required for annexation under statutory requirements. The application was found to meet the requirements of the Land Development Regulations (LDRs) as well as the adopted Comprehensive Plan, and is ready for transmittal to the Town Commission.

Mr. Carroll reported that notices to inform the surrounding property owners (70) within 150 feet of the properties proposed by annexation request were mailed Thursday, March 24, 2016, and the properties were posted the same date. There have been no objections or letters of support received on this application.

Mr. Carroll reported that the Technical Review Committee (TRC) members individually reviewed application for Ordinance No. 2016-11, and determined the application to be complete and ready for transmittal to the Planning and Zoning Board. At the April 11, 2016 meeting, the Planning and Zoning Board recommended approval of Ordinance No. 2016-11 by a vote of 3-0. The Town Commission is scheduled to consider Ordinance No. 2016-11 for second/final reading on Monday, May 16, 2016 at 6:00 p.m. He stated Martin Dzuro is present to answer any questions.

Mayor Kussard asked if anyone had any questions or comments, and hearing none, asked for a motion.

Upon a motion by Commissioner Hannan and seconded by Commissioner Holden, the Commission approved the first reading of Ordinance No. 2016-11 by the following roll call vote:

HOLDEN	***YES***
VINCENT	***YES***
HANNAN	***YES***
RICHARDS	***YES***
KUSSARD	***YES***

8. <u>Ordinance No. 2016-12 – First Reading – Small Scale Future Land Use Comprehensive Plan Amendment – The Villages of Lake-Sumter, Inc., John and Patricia Porto, and Pamela A. Barsness – from Lake County Medium Urban Density to Lady Lake Manufactured Home High Density for Five Lots Consisting of Approximately 0.64 +/- Acres of Land, Located in Orange Blossom Gardens Unit, 1, 3 and 3.1b. (Thad Carroll)</u>

Town Attorney Derek Schroth read the ordinance by title only.

Growth Management Director Thad Carroll gave the background summary for this agenda item (on file in the Clerk's office). He stated that the applicant, Martin L. Dzuro, on behalf of The Villages of Lake-Sumter, Inc., John and Patricia Porto, and Pamela A. Barsness, has filed applications to amend the future land use comprehensive plan for properties consisting of five lots located north of Griffin Avenue and northeast of North Highway 27/441 within the Orange Blossom Garden Subdivisions Units 1, 3, and 3.1B. The application involves 0.64 +/- acres of property from unincorporated Lake County into the Town of Lady Lake. Staff recommends approval of this ordinance. The proposed properties are as follows:

- 1026 Aloha Way
- 803 Aloha Way
- 811 Truman Avenue
- 815 Royal Palm Avenue
- 817 Royal Palm Avenue

The Small Scale Future Land Use Map Amendment application was received on Monday, February 29, 2016, and has been reviewed and determined to be complete, satisfying the necessary criteria as required to meet the requirements of the Land Development Regulations (LDRs) as well as the adopted Comprehensive Plan, and is ready for transmittal to the Town Commission.

A map and an aerial view of the properties was shown, as were photos of the posting of the properties.

Mr. Carroll reported that notices to inform the surrounding property owners (70) within 150' of the property of the proposed annexation were mailed on Thursday, March 24, 2016, and the properties were posted this same date.

Concurrency Determination Statement - The Villages has removed existing manufactured homes on three (3) of the lots in a historic section of the Villages known as Orange Blossom Gardens to construct a similar size conventional built home on each lot (the two homes on Aloha Way have yet to be removed). There will be no increase in utility services, traffic, population, or recreation use.

Mr. Carroll reviewed the impact on Town services as follows:

Potable Water – No impact, lots are served by the Village Center Community Development District Central Water System.

Sewer – No impact, lots are served by the Village Center Community Development District Central Sewer System.

Schools – Not factored for project – no foreseen impact of students as the project is located within an active adult retirement community.

Transportation – No impact, the existing home will be replaced with a new home. There will be no change in average daily trip generation.

Parks & Recreation – The small scale future land use amendment will not cause P&R Level of Service to be exceeded since the project is for the replacement of existing homes. Additionally, the Villages provides its residents with all Park and Recreation Amenities.

Stormwater – Project will be required to adhere to SJRWMD guidelines and of Town of Lady Lake Floodplain Management Ordinance for parcels within Special Flood Hazard Areas.

Applications have been reviewed and determined to be complete. The applicant has submitted all appropriate material in compliance with the Land Development Regulations (LDRs) and the application is ready for transmittal to the Town Commission. Additionally, the applications were reviewed and determined to be in compliance with the directives of the adopted Comprehensive Plan in accordance with the sought designation. A Concurrency Determination Statement has also been included as part of the Small Scale Comprehensive Plan Amendment Application, which the applicant submitted to explain expected impacts on Town Services.

DRAFT

The subject properties involve approximately 0.64 ± acres lie in Section 06, Township 18 South, Range 24 East in Lake County, Florida. The Future Land Use of the adjacent properties is as follows:

Future Land Use

Subject Properties	Lake County Medium Urban Density
Future Land Use of Adjacent Properties	
West	Lake County Medium Urban Density
East	Lake County – Medium Urban Density
North	Lake County Medium Urban Density
South	Lake County Medium Urban Density

Comments:

1) Annexation and Rezoning Applications have been submitted concurrently with this Small Scale Future Land Use Amendment Application.
2) In accordance with the Interlocal Agreement for Building Permits & Inspections Section 2).A)., executed on June 23, 2015, if The Villages has applied for annexation, then the Town can issue building permits located within the unincorporated area.
3) Project will be required to adhere to St. John's River Water Management District guidelines and the Town of Lady Lake Floodplain Management Ordinance for parcels within Special Flood Hazard Areas.

Mr. Carroll reported that the Technical Review Committee (TRC) members individually reviewed application for Ordinance No. 2016-12, and determined the application to be complete and ready for transmittal to the Planning and Zoning Board. At the April 11, 2016 meeting, the Planning and Zoning Board recommended approval of Ordinance No. 2016-12 by a vote of 3-0. The Local Planning Agency considered this ordinance at an earlier meeting today and voted 5-0 for approval. The Town Commission is scheduled to consider Ordinance No. 2016-12 for second/final reading on Monday, May 16, 2016 at 6:00 p.m. He stated Martin Dzuro is present to answer any questions.

Mayor Kussard asked if anyone had any questions or comments, and hearing none, asked for a motion.

Upon a motion by Commissioner Holden and seconded by Commissioner Richards, the Commission approved the first reading of Ordinance No. 2016-12 by the following roll call vote:

HOLDEN	***YES***
VINCENT	***YES***
HANNAN	***YES***
RICHARDS	***YES***
KUSSARD	***YES***

9. Ordinance No. 2016-13 – First Reading – Rezoning – The Villages of Lake-Sumter, Inc., John and Patricia Porto, and Pamela A. Barsness – Rezoning from Lake County Residential Medium (RM) to Lady Lake Mixed Residential Medium Density (MX-8) for Five (5) Lots of Approximately 0.64 +/- Acres – Located within Located Within Orange Blossom Gardens Units 1, 3, And 3.1b. (Thad Carroll)

Town Attorney Derek Schroth read the ordinance by title only.

DRAFT

Growth Management Director Thad Carroll gave the background summary for this agenda item (on file in the Clerk's office). He stated that the applicant, Martin L. Dzuro, on behalf of The Villages of Lake-Sumter, Inc., John and Patricia Porto, and Pamela A. Barsness, has filed an application to rezone properties consisting of five lots located north of Griffin Avenue and northeast of North Highway 27/441 within the Orange Blossom Garden Subdivisions Units 1, 3, and 3.1B. The application involves rezoning 0.64 +/- acres of property from Lake County Residential Medium (RM) to Lady Lake Mixed Residential Medium Density (MX-8). The MX-8 designation is consistent with the other lots in the Villages which are presently in the Town of Lady Lake's jurisdiction. Staff recommends approval of this ordinance. The proposed properties are as follows:

- 1026 Aloha Way
- 803 Aloha Way
- 811 Truman Avenue
- 815 Royal Palm Avenue
- 817 Royal Palm Avenue

The Rezoning application was received on Monday, February 29, 2016, and has been reviewed and determined to be complete, satisfying the necessary criteria as required to meet the requirements of the Land Development Regulations (LDRs) as well as the adopted Comprehensive Plan, and is ready for transmittal to the Town Commission.

Mr. Carroll reported that notices to inform the surrounding property owners (70) within 150' of the property of the proposed annexation were mailed on Thursday, March 24, 2016, and the properties were posted this same date.

The current zoning map was shown. The subject properties lie in Section 06, Township 18 South, Range 24 East, in Lake County, Florida. Appropriate legal descriptions and survey information have been included with the submitted application. The zoning designation of the subject properties and adjacent properties are as follows:

Zoning

Subject Property	Lake County Residential Medium (RM)
Zoning of Adjacent Properties	
West	Lake County Residential Medium (RM)
East	Lake County Residential Medium (RM)
North	Lake County Residential Medium (RM)
South	Lake County Residential Medium (RM)

Mr. Carroll reported that the Technical Review Committee (TRC) members individually reviewed application for Ordinance No. 2016-13, and determined the application to be complete and ready for transmittal to the Planning and Zoning Board. At the April 11, 2016 meeting, the Planning and Zoning Board recommended approval of Ordinance No. 2016-13 by a vote of 3-0. The Town Commission is scheduled to consider Ordinance No. 2016-13 for second/final reading on Monday, May 16, 2016 at 6:00 p.m. He stated Martin Dzuro is present to answer any questions.

Mayor Kussard asked if anyone had any questions or comments, and hearing none, asked for a motion.

Upon a motion by Commissioner Vincent and seconded by Commissioner Richards, the Commission approved the first reading of Ordinance No. 2016-13 by the following roll call vote:

DRAFT

HOLDEN	*YES*
VINCENT	*YES*
HANNAN	*YES*
RICHARDS	*YES*
KUSSARD	*YES*

10. Ordinance No. 2016-14 – First Reading – Large Scale Future Land Use Comprehensive Plan Amendment – Lady Lake Inc. – from Lady Lake Mixed Residential Medium Density (MR-MD) to Lady Lake Commercial Tourist (CT) for Property Being 29.43 ± Acres of Land – Located At 609 Highway 466, Being North of Highway 466, West of North Clay Avenue, and East of Rolling Acres Road (Thad Carroll)

Town Attorney Derek Schroth read the ordinance by title only.

Growth Management Director Thad Carroll gave the background summary for this agenda item (on file in the Clerk's office). He stated that the applicant, Bret Jones, P.A., has filed an application on behalf of Lady Lake, Inc., to amend the Future Land Use designation of property (AK# 1120829) located at 609 Highway 466, being north of Highway 466, west of North Clay Avenue, and east of Rolling Acres Road, which includes 29.43± acres within Town of Lady Lake limits, from Mixed Residential Medium Density (MR-MD) to Commercial Tourist (CT). He stated this property is also referenced as Recreation Plantation. The present use of the property is as a storage area and the proposed use is for a 232-unit RV park site with amenities. Staff's recommendation is for approval.

A map and an aerial view of the property was shown, as were photos of the postings.

The Large Scale Future Land Use Map Amendment application was received on February 22, 2016, and has been reviewed and determined to be complete satisfying the necessary criteria as required to meet the requirements of the Land Development Regulations (LDRs) as well as the adopted Comprehensive Plan, and is ready for transmittal to the Town Commission.

The conceptual bubble plan submitted by Riddle Newman Engineering, Inc., highlights the proposed park facility and included the general area of where the amenities will be placed in the park, as well as the street network and water retention area.

Mr. Carroll reviewed the impact on Town services as follows:

Potable Water –

- Potable Water Systems – CUP allocation of 1.18 million gpd (2016)
- Current water systems usage – 697,461 gpd
- Demand Contingent on Occupants of Development (482,539 gpd available)
- Estimated consumption 28,000 gpd

Sewer – The applicant has proposed to utilize the existing onsite sewer plant; no additional impact to the Town of Lady Lake (pending waiver to not connect).

Schools – Not factored for project – no foreseen impact of students.

Transportation – Traffic Analysis indicates a that the proposed Future Land Use designation of CT – RV Park, will generate 125 fewer a.m. peak hour trips and 164 fewer p.m. peak hour trips than the current MR-MD Designation assuming maximum potential under the Future Land Use Classification.

Parks & Recreation – Addition in population will not cause P&R Level of Service to be exceeded.

Stormwater – Project will be required to adhere to SJRWMD guidelines.

Mr. Carroll reported that notices to inform the surrounding property owners (17) within 150' of the property of the proposed amendment were mailed on Monday, March 28, 2016 and the property was posted this same date. He stated that staff has had contact with four people expressing concern regarding traffic in this area, including two attending the Planning and Zoning Board meeting, and two inquiries by email. He stated that in this instance, the proposed future land use results in a reduction of both a.m. and p.m. trips. An email was received this afternoon from Pam Richmond confirming the reduction of p.m. peak hour trips.

Applications have been reviewed and determined to be complete. The applicant has submitted all appropriate material in compliance with the Land Development Regulations (LDRs) and the application is ready for transmittal to the Town Commission. Additionally, the applications were reviewed and determined to be in compliance with the directives of the adopted Comprehensive Plan in accordance with the sought designation. A justification statement has also been included as part of the Large Scale Comprehensive Plan Amendment Application, which the applicant submitted for justifying why the future land use should be amended for the development proposed.

The subject property involving approximately 29.43 ± acres lies in Section 17, Township 18, Range 24 in Lake County, Florida. The Future Land Use of the adjacent properties is as follows:

Future Land Use

Subject Property	Lady Lake – Mixed Residential - Medium Density (MR-MD) - Up to 8 du/ac
Future Land Use of Adjacent Properties	
West	Lady Lake - Commercial Tourist (CT)
East	Lake County – Urban Low Density, Lady Lake Mixed Residential Low Density (MR-LD) and Commercial General – Retail Sales and Services (RET)
North	Lake County – Urban Low Density, Lady Lake – Religious Facilities (RF)
South	Lady Lake – Multi-Family Low-Rise 12 dwelling units per acre (MF-LR)

Mr. Carroll reviewed the comments on this application as follows:

1. Rezoning and Special Exception Use Applications have been submitted concurrently with this Large Scale Future Land Use Amendment Application.
2. Applicant must submit a site plan for the proposed 232-Unit RV Park site if the Town Commission approves the comprehensive plan amendment, rezoning, and Special Exception Use applications to allow the RV Park.
3. Town of Lady Lake Commercial Design Standards outlined in Chapter 20 of the LDRs must be adhered to prior to any design of site plans for the proposed buildings associated with this development.
4. Connection to Town Water Utility will be required to service this RV Park Site.
5. Mitigation may be necessary for site plan approval to address concurrency deficiencies associated with the impacts of this project.

Mr. Carroll reported that the Technical Review Committee (TRC) members individually reviewed application for Ordinance No. 2016-14 and determined the application to be complete and ready for

transmittal to the Planning and Zoning Board. At the April 11, 2016 meeting, the Planning and Zoning Board recommended approval of Ordinance No. 2016-14 by a vote of 3-0. The Local Planning Agency considered this ordinance at an earlier meeting and voted 5-0 for approval. The Town Commission will be scheduled to consider Ordinance No. 2016-14 for second/final reading after the Florida Department of Economic Opportunity (DEO) has reviewed the transmitted amendment.

Mr. Carroll stated that Mr. Grant Gore and his attorney are present if there are any questions.

Mayor Kussard commented that there is currently only one ingress/egress on Hwy 466, with another access to be added on Clay Avenue where there is none currently. She asked where it will be located on Clay Avenue.

Mr. Carroll replied that it will be created as a result of the development application after the approvals are in place and will be reviewed on the conceptual plan with the rezoning application.

- Buddy Johnson of the Villages Church of Christ stated he sent an email to the Commissioners and the Town Manager expressing his concern about the traffic issues in the area. He stated he respects the figures presented in the traffic report which will result in fewer vehicles on the roadway, and suggested that the new access road be put on Oak Street rather than Clay Avenue.

- Tim Lundy, representing the Boy Scout Troop 244 in Lady Lake, commented that Recreation Plantation and Mr. Gore have provided support to the troop in letting them use the property, and financial support, as well. He stated they would not be as successful as they are without his contribution.

Mayor Kussard asked if anyone else had any questions or comments, and hearing none, asked for a motion.

Upon a motion by Commissioner Holden and seconded by Commissioner Richards, the Commission approved the first reading of Ordinance No. 2016-14 by the following roll call vote:

HOLDEN	***YES***
VINCENT	***YES***
HANNAN	***YES***
RICHARDS	***YES***
KUSSARD	***YES***

11. <u>Ordinance No. 2016-15 – First Reading – Rezoning – Lady Lake Inc. – Rezoning From Lady Lake Mixed Residential Medium Density (MX-8) to Lady Lake Commercial Tourist (CT); Property Being 29.43 ± Acres of Land – Located At 609 Highway 466, Being North of Highway 466, West of North Clay Avenue, and East of Rolling Acres Road (Thad Carroll)</u>

Town Attorney Derek Schroth read the ordinance by title only.

Growth Management Director Thad Carroll gave the background summary for this agenda item (on file in the Clerk's office). He stated that the applicant, Bret Jones, P.A., has filed an application on behalf of Lady Lake, Inc., to amend the Future Land Use designation of property (AK# 1120829) Located at 609 Highway 466, being north of Highway 466, west of North Clay Avenue, and east of Rolling Acres Road, which includes 29.43± acres within Town of Lady Lake limits, from Mixed Residential Medium Density (MX-8) to Commercial Tourist (CT). The proposed use of the property will be a 232 lot recreational vehicle park with amenities, and staff recommends approval.

The conceptual plan details the applicant's proposal; in addition, a Special Exception use will be required for the RV Park uses.

A map and aerial view of the property, and a conceptual drawing of the intended layout of the 232 lots with amenities of the property was shown, as were photos of the posting. Mr. Carroll noted that the proposed access on Clay Avenue is shown coming out roughly halfway down the property line, and appears to be a divided boulevard entrance with an in and out.

The Rezoning application was received on February 22, 2016, and has been reviewed and determined to be complete, satisfying the necessary criteria as required to meet the requirements of the Land Development Regulations (LDRs) as well as the adopted Comprehensive Plan, and is ready for transmittal to the Town Commission.

Mr. Carroll reported that notices to inform the surrounding property owners (17) within 150' of the property of the proposed amendment were mailed on Monday, March 28, 2016, and the property was posted this same date.

The subject property lies in Section 17, Township 18, Range 24 in Lake County, Florida. Appropriate legal descriptions, and conceptual plan have been included with the submitted application. The zoning designation of the subject property and adjacent properties are as follows:

Zoning

Subject Property	Lady Lake– Mixed Residential Medium Density (MX-8)
Zoning of Adjacent Properties	
West	Lady Lake - Commercial Tourist (CT)
East	Lady Lake- Heavy Commercial (HC) and Mixed Single Family Low Density (MX-5); Lake County – Agriculture
North	Lady Lake – Public Facilities District (PFD), Lake County – Agriculture
South	Lady Lake – Multi-Family 12 dwelling Units per acre (MF-12)

Mr. Carroll reported that the Technical Review Committee (TRC) members individually reviewed application for Ordinance No. 2016-15 and determined the application to be complete and ready for transmittal to the Planning and Zoning Board. At the April 11, 2016 meeting, the Planning and Zoning Board recommended approval of Ordinance No. 2016-15 by a vote of 3-0. The Town Commission will be scheduled to consider Ordinance No. 2016-15 for second/final reading after the Florida Department of Economic Opportunity (DEO) has reviewed the transmitted Large-Scale Comprehensive Plan Amendment.

Mr. Carroll stated that Mr. Gore and Allison Strange are present if there are any questions.

Mayor Kussard asked if there will need to be an increase in ERUs as the applicant is requesting to use their existing sewer plant for the proposed increase of 232 lots.

Mr. Carroll replied that this item will be considered with the subsequent application.

Mayor Kussard asked if anyone else had any questions or comments, and hearing none, asked for a motion.

Upon a motion by Commissioner Richards and seconded by Commissioner Holden, the Commission approved the first reading of Ordinance No. 2016-15 by the following roll call vote:

HOLDEN	*YES*
VINCENT	*YES*
HANNAN	*YES*
RICHARDS	*YES*
KUSSARD	*YES*

12. Ordinance No. 2016-16 – First Reading – Special Exception Use (SEU) – Lady Lake Inc. – Requesting to Incorporate the Recreational Vehicle (RV) Park Land Use Within the Commercial Tourist (CT) Zoning Classification; Property Being 29.43 ± Acres of Land – Located At 609 Highway 466, Being North of Highway 466, West of North Clay Avenue, and East of Rolling Acres Road (Thad Carroll)

Town Attorney Derek Schroth read the ordinance by title only.

Growth Management Director Thad Carroll gave the background summary for this agenda item (on file in the Clerk's office). He stated that the applicant, Bret Jones, P.A. has submitted a Special Exception Use (SEU) application on behalf of Lady Lake, Inc. to incorporate the Commercial Tourist land use as permitted under existing parcel located at 609 Highway 466 (Alternate Key 1120829. In accordance with the Town of Lady Lake Land Development Regulations, Chapter 5, Section 5-4, k).2).B), upon approval of a Special Exception Use application, a Recreational Vehicle (RV) Park can be established within the Commercial Tourist Zoning District. He stated that staff recommends approval.

The property is currently being utilized as a storage area for the adjacent RV park currently in existence. Future land use plan amendment and rezoning applications have been submitted concurrently to change the land use and zoning from Mixed Residential Medium Density (MX-8) to Commercial Tourist (CT) to allow for the proposed 232-unit RV Park. The conceptual plan highlights a complete facility to include clubhouse, pool, and pickle ball courts. The projected density for the plan is approximately 8 units/acre.

Mr. Carroll reviewed the list of amenities the applicant shall be allowed to include, but is not limited to, as follows:

1. office;
2. guard house/gate;
3. post office/postal area;
4. manager's residence;
5. clubhouse;
6. bathhouse;
7. laundromat;
8. pool;
9. jacuzzi;
10. tennis/pickle ball courts;
11. horseshoes;
12. shuffleboard;
13. bocce ball;
14. equipment sheds;
15. tiki hut/snack bar
16. vending area
17. softball or multi-purpose sports field
18. dog walk/park; and
19. restaurant

DRAFT

Mr. Carroll stated that items the Commission should consider before proceeding are as follows:

5. The land owner shall be permitted to utilize the existing sewer plant that currently services the existing Recreation Plantation development.

Mr. Carroll stated this item can be withdrawn at this time as it is typically considered at the site plan process, but was submitted as part of the application at this time.

19. Buffer Type "B" shall be provided along the boundary of Oak Street and Clay Avenue. Buffer Type "A" shall be provided along the southerly boundary abutting the MF-12 zoned apartment complex.

Mr. Carroll noted that Oakleaf Village Apartments are along the south boundary and a ten-foot boundary is required. The other two right-of-ways require a 20 ft. buffer as per the Land Development Regulations. He stated the conceptual drawing puts forth a ten-foot buffer on Clay Avenue and Oak Street, and is a conflict present within the conceptual plan and the ordinance. A rendering of the conceptual plan was shown.

As per the Town's Land Development Regulations a *Recreational vehicle park (or RV park)* is defined as a parcel of land under single ownership, where sites are offered for rent for the temporary placement of recreational vehicles being used for travel, recreation or vacation purposes.

The subject property involving approximately 29.43 ± acres lies in Section 17, Township 18, Range 24 in Lake County, Florida. The Future Land Use of the adjacent properties is as follows:

Future Land Use

Subject Property	Lady Lake – Mixed Residential - Medium Density (MR-MD) - Up to 8 du/ac
Future Land Use of Adjacent Properties	
West	Lady Lake - Commercial Tourist (CT)
East	Lake County – Urban Low Density, Lady Lake Mixed Residential Low Density (MR-LD) and Commercial General – Retail Sales and Services (RET)
North	Lake County – Urban Low Density, Lady Lake – Religious Facilities (RF)
South	Lady Lake – Multi-Family Low-Rise 12 dwelling units per acre (MF-LR)

Zoning

Subject Property	Lady Lake– Mixed Residential Medium Density (MX-8)
Zoning of Adjacent Properties	
West	Lady Lake - Commercial Tourist (CT)
East	Lady Lake- Heavy Commercial (HC) and Mixed Single Family Low Density (MX-5); Lake County – Agriculture
North	Lady Lake– Public Facilities District (PFD), Lake County – Agriculture
South	Lady Lake – Multi-Family 12 dwelling Units per acre (MF-12)

Comments:

DRAFT

1) The applicant has properly addressed the review criteria for Special Exception Uses as outlined in the Land Development Regulations, Chapter 6, Section 2, (e), (2). The application is complete and meets the requirements for submittal to the Town Commission per the requirements of the Land Development Regulations.
2) Applicant must submit a site plan for the proposed 232-Unit RV Park site if the Town Commission approves the comprehensive plan amendment, rezoning, and Special Exception Use applications to allow the RV Park.
3) Town of Lady Lake Commercial Design Standards outlined in Chapter 20 of the LDRs must be adhered to prior to any design of site plans for the proposed buildings associated with this development. Connection to Town Utilities will be required to service this RV Park Site. Additionally, all necessary regulatory agency permits will be required to be submitted during the site plan process, and required mitigation will be assessed during site plan process to address concurrency deficiencies associated with the impacts of this project.

Chapter 6, Section 2, (e), (2) Review Criteria. When reviewing an application for a special exception the Town Commission shall consider the following requirements and criteria, including but not limited to:

A) Traffic generation and access for the proposed use shall not adversely impact adjoining properties and the general public safety.
B) Off-street parking, loading and service areas shall be provided and located such that there is no adverse impact on adjoining properties, beyond that generally experienced in the district.
C) Required yards, screening or buffering, and landscaping shall be consistent with the district in general and the specific needs of the abutting land uses.
D) Size, location or number of special exception uses in the area shall be limited so as to maintain the overall character of the district as intended by this Code.
E) Architectural and signage treatments shall comply with the general provisions applicable to permitted uses in the district, to the greatest extent possible, and be sensitive to surrounding development.
F) The availability of utilities services (such as water, sewer, and solid waste) and recreational facilities.

The application has been reviewed and been determined to be complete. In accordance with all supporting appropriate material, the application is deemed in compliance with the Land Development Regulations (LDRs).

Mr. Carroll reported that notices to inform the surrounding property owners (17) within 150' of the property of the proposed amendment were mailed on Monday, March 28, 2016, and the property was posted this same date.

Mr. Carroll reported the Technical Review Committee (TRC) members individually reviewed application for Ordinance No. 2016-16 and provided comments on April 21, 2016, and determined the application to be complete and ready for transmittal to the Town Commission. He stated he did field some questions from department heads and their concerns will be brought up during the site plan process if and when filed. The Planning and Zoning Board does not review Special Exception Use applications. The Town Commission is scheduled to consider Ordinance No. 2016-16 for second/final reading after the Florida Department of Economic Opportunity (DEO) has reviewed the transmitted future land use map amendment (Ord. 2016-14) for this project.

Mr. Carroll stated that Mr. Gore and Allison Strange are present if there are any questions.

Commissioner Richards asked if Recreation Plantation's sewer plant has the capacity for this

expansion of 232 lots. He also stated he has not heard of any complaints regarding odor from the plant or anything regarding DEP permits.

Allison Strange with Bret Jones, P.A., replied that the sewer plant does have capacity. She stated they had a study done on the plant itself, and using the state's proposed figures for an anticipated sewer plant, they would be under capacity. Using historical figures, given the park has been active for 20-30 years, they are well under (about 60%) capacity, even assuming the additional 232 units. Ms. Strange stated they have received no complaints about odor, and as this property is adjacent to the sewer plant, she is certain Mr. Gore would not proceed with this proposal if he had customers concerned about it.

Mayor Kussard commented that with the addition of the 232 units, additional ERUs are required, and with that, the LDRs specify they must hook up to Town sewer or get a waiver to use their existing sewer plant. She asked that #19 be pulled off of this ordinance and have it brought forward during the site plan.

Ms. Strange replied that they were aware these items would be considered at site plan, but wanted the Commissioners to be aware of their plans so they would not be surprised by anything. She stated they are waiting on information from the historical data to address the ERUs as well. Ms. Strange stated they would also like to pull the buffers off (#5) and address it with staff during the site plan process.

Mayor Kussard stated the amenities include the possibility of a restaurant; she asked if it would be a resident-only restaurant or one open to the public, because there would be traffic concerns if it was open to the public.

Ms. Strange replied that most of the amenities are an expansion of what is currently in place and are intended for residents.

Town Manager Kris Kollgaard suggested revising the ordinance to state specifically that the restaurant would be for Recreation Plantation residents only, not for the public.

Ms. Strange agreed and stated it may be part of the site plan process also. She again thanked staff and counsel.

Mayor Kussard asked if anyone else had any questions or comments, and hearing none, asked for a motion.

Upon a motion by Commissioner Richards and seconded by Commissioner Hannan, the Commission approved the first reading of Ordinance No. 2016-16, to be amended as discussed, by the following roll call vote:

HOLDEN	***YES***
VINCENT	***YES***
HANNAN	***YES***
RICHARDS	***YES***
KUSSARD	***YES***

M. TOWN MANAGER'S REPORT:

Town Manager Kris Kollgaard reported that Steve Roth with the Specialty Orthopedic Center sent her an email regarding their plan to have a meeting with the residents. They would like to use the

DRAFT

Commission Chambers for a public meeting on Tuesday, May 10th at 6 p.m. to allow residents to come in and discuss the project and any concerns they may have with it. She stated this will be publically noticed in case one or more Commissioners chooses to attend.

Ms. Kollgaard reported that Doug McCoy of Waste Management sent her examples of flyers that they will be distributing, including one for Eustis that was passed around to the Commissioners for viewing. She stated they will make a new flyer which will have specific information regarding Lady Lake on it.

Ms. Kollgaard reported that the tree trimming door hangers have been delivered to The Villages. She asked that the Commissioners let her know how many they would like to hand out to their homeowners' associations such as Water Oak.

Ms. Kollgaard stated that she was recently handed information regarding the University of Florida's Water School - Prepare for the Future event at The Villages Sumter Service Center, and the hand-out is available if the Commissioners or anyone from the public would like to attend.

Ms. Kollgaard reminded the Mayor and Commissioners that the Kiwanis Prayer Breakfast is scheduled at La Hacienda tomorrow morning at 8 a.m. if they plan on attending.

N. MAYOR/COMMISSIONER'S REPORT:

Mayor Kussard reported she attended the unveiling of the marker that was installed at the Lady Lake Historical Society Museum this past Saturday. She stated it is very beautiful and it is important that everyone remember their history.

O. PUBLIC COMMENTS:

Mayor Kussard asked if there were any further questions or comments. There were no comments.

P. ADJOURN: The meeting was adjourned at 7:08 p.m.

Kristen Kollgaard, Town Clerk

Ruth Kussard, Mayor

Minutes transcribed by Nancy Slaton, Deputy Town Clerk

DRAFT

H-3

TOWN COMMISSION AGENDA ITEM

REQUESTED COMMISSION MEETING DATE: May 16, 2016

SUBJECT: Consideration for approval of a "Food for Fines" program sponsored by the Lake County Library System from May 16-28, 2016
DEPARTMENT: Library

STAFF RECOMMENDED MOTION: Approval of "Food for Fines" sponsored by the Lake County Library System from May 16-28.

SUMMARY: Summer is a critical time for libraries serving children and families through our Summer Reading Programs, which impacts thousands of children. Studies have shown that children who take part in library programs reduce the impact of "summer slide" and return to school with a reading level at, or above, when they finished the previous spring.

Library fines can be a hindrance to children trying to check materials out for the summer. The goal is to help in clearing fines off of children's cards so they can fully participate in summer reading programs. Library cards are blocked when fines exceed a specific dollar amount - $10.00 for all branch libraries and most member libraries, $5.00 at Fruitland Park Library.

This will also benefit area aid organizations that identify summer as an urgent time of need for food donations. All food items collected at the Lady Lake Library would stay in Lady Lake.

The Lady Lake Public Library sponsored a "Food for Fines" for the month of December 2015. It was very successful: nine large boxes and several bags of food were donated to the Christian Food Pantry in Lady Lake, many families had records cleared and are now able to use the library, smaller fines were forgiven and lost materials were recovered.

FISCAL IMPACT: None

[ ] Capital Budget
[ ] Operating
[ ] Other

ATTACHMENTS: [ ] Ordinance [ ] Resolution [ ] Budget Resolution

[ ] Other

[X] Support Documents

DEPARTMENT HEAD **Submitted** Marsha Brunem **Date** 5/9/16

HR	**Approved as to Form** 5-10-16	**Date**
FINANCE DEPARTMENT	**Approved as to Budget Requirements**	**Date**
TOWN MANAGER FWICK	**Approved Agenda Item for:** 5-16-16	**Date**

COMMISSION ACTION:

[ ] Approved as Recommended **[ ] Disapproved** **[ ] Tabled Indefinitely**

[ ] Continued to Date Certain **[ ] Approved with Modification**

Food for Library Fine Forgiveness

What

A food donation drive. Donated food items will be credited toward reducing library fines.

When

May 16 – 28, 2016.

Where

All libraries in the Lake County Library System.

How

Each individual library will identify an aid organization in their community which accepts food donations for distribution.

- This program would not apply to library items that are lost, damaged or have been sent to a collection agency.
- Each unopened, unexpired food item with a printed expiration date would equate to $1 forgiven for library overdue fines.
- Some libraries would accept personal hygiene and baby products.
- The item(s) with the fine must be returned or renewed for the fines to be forgiven.
- Food items could be brought to any library in the Lake County Library System.
- Individuals could donate food items to help pay fines for children in need.

Why

Aid organizations have identified summer as the critical time when they need food donations. They receive plenty during the holidays. There are many families with children who normally receive food through schools. During the summer months, these families rely on local food pantries that often run out of supplies to distribute.

Summer is also a critical time for libraries serving children and families through our Summer Reading Program which impacts thousands. Studies have shown that students who participate in library programs during summer months reduce the impact of "summer slide." Students in these programs typically return to school in the fall with a reading level at, or slightly above, when they finished the previous spring.

Our goal is to help in clearing fines off children's cards so they can fully participate in the summer reading program. Library cards are blocked when fines exceed a specific dollar amount - $10.00 for all branch libraries and most member libraries, $5.00 at Fruitland Park Library.

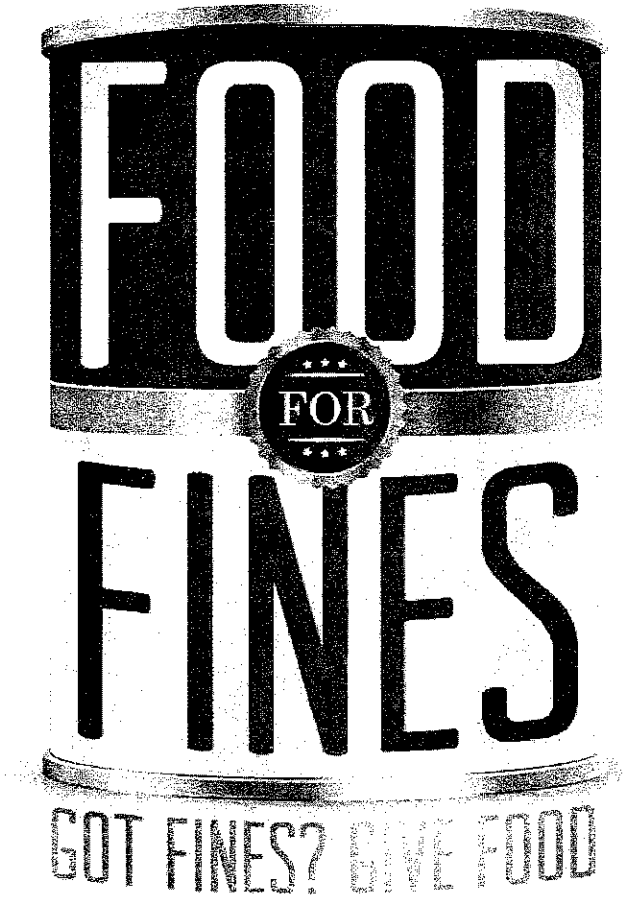

May 16-28, 2016

Get $1 of library overdue fines forgiven with each nonperishable, unexpired food item at any of the 15 Lake County libraries.

Does not apply to items that are lost, damaged or have been sent to a collection agency.

Check with your local library for further details.

All food will be donated to local food banks.

LAKE COUNTY
Library System

J-4

TOWN COMMISSION AGENDA ITEM

REQUESTED COMMISSION MEETING DATE: May 16, 2016

SUBJECT: **Consideration of the Lady Lake Outpatient Major Site Plan-Phase I – MJSP 03/16-002 – For a development proposing a 26,540-square-foot multi-specialty medical facility to be constructed along Rolling Acres Road on a 9.77+/- acre parcel at 539 Rolling Acres Road (Alternate Key 1279488).**

DEPARTMENT: **GROWTH MANAGEMENT**

RECOMMENDED MOTION:

Staff recommends advancing the site plan as presented since site specifications, as required per Town of Lady Lake Land Development Regulations, have been applied to the best extent practicable, *with the following waivers:*

- **Chapter 10, Section 10-3. b).B).4).- Waiver request for the North Elevation regarding Buffer width and plant material reduction**
- **Chapter 10, Section 10-3. b).B).3).- Waiver request for the South Elevation regarding Buffer width and plant material reduction**

SUMMARY:

George Huddleston with Littlejohn Engineering Associates, Inc., has submitted a site plan application for a 9.77 +/- acre parcel located at 539 Rolling Acres Road. The applicant proposes the construction of a 26,540-Square-foot building for a Multi-Specialty Clinic Facility. The property is zoned Industrial, which permits the proposed medical office/clinic use. The Future Land Use Map designation for the site is Industrial (I). This particular piece of property is located just south of the Villages Industrial Center and north of the Citizen's First Bank Processing Center and the Fort Knox Storage Facility. This is one of the few remaining undeveloped properties on that section of Rolling Acres Road north of Highway 466. The property is expected to be developed in two (2) phases.

The site plan was reviewed to determine if it is in compliance with the Land Development Regulations (LDRs) including parking, setbacks, landscaping, engineering, environmental protection and commercial design standards. The applications were

determined to be in compliance with the Land Development Regulations (LDRs) and the Comprehensive Plan.

The engineering plans submitted, consisting of thirty-three (33) sheets, are drawn on 24"x36" sheets and certified by Christopher S. Grammier, Professional Engineer with Littlejohn, are dated May 9, 2016. Landscaping and Irrigation plans submitted, consisting of eight (8) sheets and certified by Jay R. Hood, Registered Landscape Architect with Littlejohn, are dated May 9, 2016. Reviews were completed for the Town by Town staff, Neel-Schaffer Engineering, Daniel Hickey with the Villages Fire Department, and Building Official Dallas Foss. Attached are following items in the packet:

1. Site Plan Review completed by Growth Management on 04/28/2016 (Satisfied).
2. Review No. 2 for the general site development completed by Neel-Schaffer Engineering, dated 04/27/2016 (Satisfied)
3. Review by Fire Inspector Daniel Hickey dated 04/19/2016 (Satisfied)
4. Review by Building Official Dallas Foss dated 04/26/2016 (Satisfied)
5. St. Johns Water Management District Permit No. 145706-1 dated 04/22/2016 (Satisfied).

Commercial Design Standards

Attached are the site plan and façade elevations for the Specialty Orthopedic Center:

In accordance with the Land Development Regulations, **Chapter 20, Section 20-3C).3).A)**., new buildings should adopt one of the four recommended architectural styles: Frame Vernacular, Craftsman/Bungalow, Mediterranean, or Mission.

The Specialty Orthopedic Center Facility exhibits a Modern Architectural Design style featuring white cement plaster, metal wall panels, split face concrete block, glass doors and windows throughout the different exterior wall elevations of the building.

- ✓ Primary entrance oriented towards the public right-of-way featuring a Portico
- ✓ Substantial architectural elements that projects/recesses from the building
- ✓ Facades includes changes in place, arcades, change in compatible material, changes in texture, doors and windows
- ✓ Primary façade features public entrances, roof treatments, awnings, and landscaping
- ✓ Secondary and rear entrances include architectural embellishments such as awnings and landscaping
- ✓ All glazing is transparent
- ✓ Rooftops consists of steeped parapets of different colored material

Tree Requirements:

In accordance with Chapter 10-Landscape and Tree Protection, the site is required to provide 931.2 tree caliper inches based on its 5.82-acre site development area (160"x 5.82 acres). Please see the landscaping tree proposal breakdown:

Existing Trees to remain	271.0 tree caliper inches
Proposed Canopy & Understory Trees	735.5 tree caliper inches
Total tree caliper inches	1006.5 tree caliper inches

The applicant is providing more than the required on-site tree caliper inches.

Notes:

- A 65" history oak tree is proposed to be preserved and no historic trees are proposed to be removed for this development.

The applicant is pursuing the following ***landscaping waivers:***

- In accordance to **Chapter 10, Section 10-3. b).B).4).**, the *North* Elevation requires "Class D" Landscaping Buffer-Forty (40) feet minimum width with eight (8) canopy trees, six (6) understory trees and a continuous hedge or an approved fence or wall.

  The applicant is required to provide *56 canopy trees* and *35 understory trees.*

  Request: The applicant is requesting a waiver for 13 canopy trees and to reduce the buffer width from 40 feet to 20 feet.

  Justification: Buffer width reduction has been requested due to modern building layout to meet commercial design standards and to accommodate parking spaces needed for Phase I.

- In accordance to **Chapter 10, Section 10-3. b).B).3).**, the *South* Elevation requires "Class C" Landscaping Buffer- Thirty (30) feet minimum width with six (6) canopy trees, four (4) understory trees and a continuous hedge or an approved fence or wall.

  The applicant is required to provide *42 canopy trees* and *28 understory trees.*

  Request: The applicant is requesting a waiver for 7 canopy trees, 2 understory trees and to reduce the buffer width from 30 feet to 20 feet.

  Justification: Buffer width reduction has been requested due to modern building layout to meet commercial design standards and to accommodate parking spaces needed for Phase I.

Comments:

As stated, the applicant is proposing a medical office/clinic; such a use would regularly require only a Landscaping Buffer Class "A" along the boundaries if assigned under the Heavy Commercial (HC) zoning district, in which this proposed use would be permitted. However, due to the property having an Industrial Zoning designation, the project is required to provide Landscaping Buffer Class D for the north elevation and Landscaping Buffer Class C for the South elevation; which are 40 feet and 30 feet in width respectively, and require extensive plant material.

Overall, the plan material that has been proposed on-site for approximately 700 lineal feet would be the equivalent of Landscaping Buffer Class C; which is far beyond what is currently featured on adjacent and surrounding sites.

Public Meetings:

The **Technical Review Committee** members individually reviewed the application on Friday, April 8, 2016, and provided outstanding comments regarding the Site Plan application.

The **Parks, Recreation and Tree Advisory Committee** reviewed the application on Wednesday, April 13, 2016, and recommended approval with a 5-0 vote.

At the **Special Conceptual Town Commission Workshop** held on Monday, April 18, 2016, at 5:15 p.m., the Town Commission voted 3-2 to move forward with site plan application for final consideration.

FISCAL IMPACT: $_____

[ ] Capital Budget
[ ] Operating
[ ] Other

ATTACHMENTS: [ ] Ordinance(s) [ ] Resolution [ ] Budget Resolution

[X] Other – Site Plan Documents

[ ] Support Documents/Contracts Available for Review in Manager's Office

---

DEPARTMENT HEAD	**Submitted** 5/10/16	**Date**
FINANCE DEPARTMENT	**Approved as to Budget Requirements**	**Date**
TOWN ATTORNEY	**Approved as to Form and Legality**	**Date**
TOWN MANAGER Furick	**Approved Agenda Item for:** 5-16-16	**Date**

BOARD ACTION: [ ] Approved as Recommended [ ] Disapproved

[ ] Tabled Indefinitely [ ] Continued to Date Certain [ ] Approved w/Modification

TOWN OF LADY LAKE
APPLICATION FOR SITE PLAN REVIEW

RECEIVED
MAR 22 2016
GROWTH MANAGEMENT DEPT.
TOWN LADY LAKE

1. Applicant's Name: Littlejohn (George Huddleston, PE)

   Telephone/Email: (407) 975-1273 ; ghuddleston@leainc.com

   Applicant is: Owner ___ Developer ___ Lessee ___ Agent _X_ Optionee ___

2. Owner's Name: Surgical Practice Resource Group of Florida (Steve Roth, COO)

   Address: 913 Venture Avenue, Suite #1, Leesburg, FL, 34748

   Telephone/Email: (352) 801-7992 ; sroth@sprgroup.com

3. Engineer's Name: Littlejohn (Chris Grammier, PE)

   Address: 1615 Edgewater Drive, Suite 200, Orlando, FL, 32804

   Telephone/Email: (407) 975-1273 ; cgrammier@leainc.com

   Reg. Number: PE 69919 (Firm Certification # 28050)

4. Architect's Name: Studio+ (Rachel Thomas)

   Address: 2211 E. 7th Avenue, Tampa, Florida, 33605

   Telephone/Email: (813) 625-2142 ; RachelT@studioplusarch.com

   Registration Number: AA26002372

5. Landscape Architect: Littlejohn (Jay Hood, PLA)

   Address: 1615 Edgewater Drive, Suite 200, Orlando, FL, 32804

   Telephone/Email: (407) 975-1273 ; jhood@leainc.com

   Registration Number: LA0001277 (Firm Certification # 28050)

6. Project Name: Specialty Orthopedic Clinic

   Physical Location/Address: 539 Rolling Acres Road

11. The property is located in the vicinity of the following streets:

    On the east side of Rolling Acres Road, north of Oak Street & south of US 27. Specifically, the site is immediately north of the Citizen's First Bank / Fort Knox Self Storage development.

8. Area of property 425,760 Square Feet 9.774 Acres

9. The exact legal description of the property as shown on the Tax Receipt or the Warranty Deed, or attach a separate sheet to the application form:

   The north ½ of the North ½ of the Southwest ¼ of the Northwest ¼ in Section 17, Township 18 South, Range 24 East, Lake County, Florida, less the West 40 feet.

10. The property is currently zoned: Industrial

11. Briefly describe the proposed project: A proposed medical [orthopedic] clinic

    If for storage, what type of material will be stored? N/A

12. Have any development reviews and/or approvals been granted to this property?
    Yes ___ No X If yes, list the type, date and result:

    N/A

13. Has any Variance been granted concerning this property? Yes ___ No X
    If yes, list the Case Number and briefly describe the nature of the Variance.

    N/A

14. The plans shall be drawn on 24" x 36" sheets as a minimum, at the largest scale feasible. The plans or any portion thereof involving engineering, shall be certified by a professional engineer or landscape architect as required by SJRWMD. The following information must be included on the site plan:

    General Information

    X a. Name of project.

    X b. General statement of intended use of site.

    X c. Legal description of the property and size of parcel in acres or square feet.

    X d. Name and address of owner.

__X__ e. Name, address and phone number of owner's agent.

__X__ f. Name, address, signature and registration of the professionals preparing the plans.

__X__ g. Date, north arrow and scale shall be designated and where appropriate, the same scale shall be used on all sheets.

__X__ h. Vicinity map showing relationship of proposed development to the surrounding streets and thoroughfares, shall be at a scale no smaller than one inch equals five thousand two hundred eighty feet (1" = 5,280' or 1" = Mile).

__X__ i. Linear dimensions of the site.

__X__ j. Existing topography with a maximum of one (1) foot contour intervals for the proposed site.

__X__ k. Finished grading elevations.

__X__ l. Zoning of the site and of all adjacent parcels.

__X__ m. All existing and proposed building restriction lines (i.e., highway setback lines, easements, covenants, rights-of-way and building setback lines).

__X__ n. Percent of open space of site.

__X__ o. Location of proposed signs.

Building and Structure

__X__ a. Existing and proposed structures.

__X__ b. Intended use.

__X__ c. Number of stories.

__X__ d. Height of building(s).

__N/A__ e. Number of dwelling units and density.

__X__ f. Projected number of employees, if applicable.

__N/A__ g. If restaurant, show number of seats and occupancy load.

__X__ h. Square footage for proposed development, i.e., gross square footage, nonstorage area, square footage of each story, gross square footage of sales area, etc.

__[1]__ i. Photograph or sketch of proposed sign with dimensions and material type.

Street, Sidewalks, Driveways, Parking Areas and Loading Spaces

__X__ a. Engineering plans and specifications for streets, alleys, sidewalks and driveways to include soil borings, if necessary.

__X__ b. All parking spaces delineated.

__X__ c. Number of parking spaces.

__X__ d. Number and location of handicapped spaces.

__X__ e. Number of square feet of paved parking and driveway area.

__X__ f. Surface materials and cross-section of proposed paved areas.

__X__ g. Fire lanes per the Standard Fire Prevention Code adopted in the Building and Fire Codes chapter.

__X__ h. Description/location of proposed driveway(s) and median cut(s).

__X__ i. Internal traffic control circulation plan, including directional arrows and signs to direct traffic flow, as necessary.

__X__ j. Location of traffic-control signs and signalization devices, if required.

__X__ k. Number and location of required loading spaces.

__X__ i. Number and location of required bicycle spaces.

Drainage and Stormwater

__X__ a. Soil classifications, cross-sections and details of proposed retention/detention ponds, swales, berms, etc., as required by SJRWMD.

__X__ b. Size, material and location of stormwater structures and pipes.

[1] This will be provided at a later date, as the signage vendor has not been contracted at this time.

__X__ c. Indicate flood elevation for 100-year flood and any other information required in Environmental Regulations chapter.

Proposed Water, Sewer and Solid Waste Facilities

__X__ a. Size, material, specifications and location of water mains, valves, services and fire hydrants.

__X__ b. Size, material, specifications and location of sanitary sewer lines and laterals with submittal of a profile, if necessary.

__X__ c. Size and location of septic tank and drainfield, if applicable.

__N/A__ d. Grease separation system, if applicable: Size, location and materials.

__X__ e. Location(s) and access provisions for refuse service, including pad, screening, fencing and landscaping, if applicable.

Landscaping

__X__ a. Landscaping plan and provisions for maintenance including size, type and location of all landscaping, screens, walls, fences and buffers per the requirements in the Landscaping and Tree Protection chapter. If water efficient landscaping is used, the information required in that chapter should be included.

__X__ b. Irrigation system plan.

Environmental Protection

__X__ a. Natural features such as waterbodies, wetlands, native vegetative communities, etc., as required in the Environmental Regulations chapter.

__N/A__ b. Conservation easements per the requirements.

__X__ c. Provisions for the adequate control of erosion and sediment, including the location and description of the methods to be utilized during and after all phases of clearing, grading and construction.

ADDITIONAL INFORMATION TO BE PROVIDED

__[2]__ a. Summary report of all concurrency data needed as noted in Chapter 4 of the Lady Lake Land Development Regulations.

---

[2] Concurrency data has been provided within this submittal. Any additional information will be coordinated with staff provided accordingly.

TOWN OF LADY LAKE
APPLICATION FOR SITE PLAN REVIEW
Page 6

__X__ b. Drainage calculations as required in the Stormwater Management chapter.

__X__ c. Fire flow calculations, if applicable.

__X__ d. Lift station calculations, where required.

_N/A_ e. Copy of HRS permit, where required.

__[3]__ f. A construction cost estimate prepared by the engineer of record, which shall delineate any proposed improvements to be maintained by the Town.

__X__ g. Environmental assessment per the requirements, if applicable.

__X__ h. Any additional data, maps, plans or statements, as may be required, which is commensurate with the intent and purpose of the Code.

Signature of Applicant

PLEASE SUBMIT APPLICATION TO THE GROWTH DEVELOPMENT DEPARTMENT ACCOMPANIED BY EIGHT (8) COPIES OF THE SITE PLAN AND FOUR (4) 11 X 17 (SIGNED AND SEALED IF REQUIRED), APPROPRIATE REVIEW FEES, PROOF OF OWNERSHIP AND ALL APPLICABLE INFORMATION AND DOCUMENTATION AS REQUIRED BY LADY LAKE ORDINANCE 94-08, LAND DEVELOPMENT REGULATIONS, ADOPTED AUGUST 15, 1994.

Office Use:
Date Application Received: 03/22/2016 Received by: W Thom

Fees Paid:
Site Development Plan - Minor
Site Development Plan - Major up to 100,000 sq. ft. $4000.00
Site Development Plan - Major 100,001 sq. ft. and up
Commercial Design Standard Review 1975.00

[3] This will be deferred to a later time (prior to permit issuance) to allow for coordination with staff.

OWNER'S AFFIDAVIT

STATE OF FLORIDA
COUNTY OF LAKE

Before me, the undersigned authority, personally appeared Stephen E. Roth, who being by me first duly sworn on oath, deposes and says:

(1) That he/she is the duly authorized officer of Surgical Practice Resource Group of Florida, Inc., which is the fee-simple owner of the property described on page one of this application

(2) That he/she desires approval for:

Specialty Orthopedic Clinic

(3) That he/she has appointed Littlejohn Engineering Associates, Inc. (Littlejohn) to act as agent in his/her behalf to accomplish the above. The Owner is required to complete the APPLICANT'S AFFIDAVIT of this application if no agent is appointed to act in his/her stead.

Affiant (Owner's Signature)

The foregoing instrument was acknowledged before me this 21st day of March, 2016, by Stephen E. Roth, who is personally known to me or who has produced _____ as identification and who did (did not) take an oath.

Notary Public

Debra A. Isler
COMMISSION # EE 200270
EXPIRES: MAY 20, 2016
WWW.AARONNOTARY.com

NOTE

All applications shall be signed by the owner of the property, or some person duly authorized by the owner to sign. This authority authorizing a person other than the owner to sign must be attached.

APPLICANT'S AFFIDAVIT

STATE OF FLORIDA
COUNTY OF LAKE

Before me, the undersigned authority, personally appeared George B. Huddleston, III (Littlejohn), who being by me first duly sworn on oath, deposes and says:

(1) That he/she affirms and certifies that he/she understands and will comply with all ordinances, regulations, and provisions of the Town of Lady Lake, Florida, and that all statements and diagrams submitted herewith are true and accurate to the best of his/her knowledge and belief, and further, that this application and attachments shall become part of the Official Records of the Town of Lady Lake, Florida, and are not returnable.

(2) That he desires approval for:

Specialty Orthopedic Clinic

(3) That the submittal requirements for the application have been completed and attached hereto as part of this application.

Affiant (Applicant's Signature)

The foregoing instrument was acknowledged before me this 21st day of March, 2016, by George Huddleston who is personally known to me or who has produced _____ as identification and who did (did not) take an oath.

Notary Public

Stacie E. Woods
NOTARY PUBLIC
STATE OF FLORIDA
Comm# FF154479
Expires 8/29/2018

PROPERTY RECORD CARD

General Information

Owner Name:	SURGICAL PRACTICE RESOURCE GROUP OF FLORIDA INC	**Alternate Key:**	1279488
Mailing Address:	913 VENTURE AVE #1 LEESBURG, FL 34748 *Update Mailing Address*	**Parcel Number:**	17-18-24-000200001100
		Millage Group and City:	F0LL (Lady Lake)
		Total Millage Rate:	18.23370
		Trash/Recycling /Water/Info:	*My Public Services Map*
Property Location:	539 ROLLING ACRES RD LADY LAKE FL 32159 *Update Property Location*	**Property Name:**	-- *Submit Property Name*
		School Locator:	*School and Bus Map*
Property Description:	N 1/4 OF SW 1/4 OF NW 1/4--LESS W 40 FT-- | ORB 4689 PG 996 |		

Land Data

Line	Land Use	Frontage	Depth	Notes	No. Units	Type	Class Value	Land Value
1	VACANT COMMERCIAL (1000)	0	0		9.7	AC	$0.00	$756,600.00

Miscellaneous Improvements

No.	Type	No. Units	Unit Type	Year	Depreciated Value
0002	BARN (BRN)	1440	SF	1982	$7,534.00

Sales History

Book/Page	Sale Date	Instrument	Qualified/Unqualified	Vacant/Improved	Sale Price
659 / 1926	1/1/1978	Misc Deed/Document	Qualified	Vacant	$17,000.00
865 / 436	1/1/1986	Warranty Deed	Unqualified	Vacant	$1.00
1223 / 176	4/1/1993	Warranty Deed	Qualified	Improved	$55,000.00
1490 / 790	8/1/1996	Warranty Deed	Unqualified	Improved	$15,000.00
1751 / 69	9/8/1999	Quit Claim Deed	Unqualified	Improved	$0.00
1751 / 73	9/8/1999	Warranty Deed	Qualified	Improved	$197,000.00
1758 / 1693	9/27/1999	Quit Claim Deed	Unqualified	Improved	$0.00
4689 / 996	10/6/2015	Warranty Deed	Qualified	Vacant	$900,000.00

Click here to search for mortgages, liens, and other legal documents.

Values and Estimated Ad Valorem Taxes

Tax Authority	Market Value	Assessed Value	Taxable Value	Millage	Estimated Taxes
LAKE COUNTY BCC GENERAL FUND	$764,134	$764,134	$764,134	5.30510	$4,053.81
LAKE COUNTY MSTU AMBULANCE	$764,134	$764,134	$764,134	0.46290	$353.72

SCHOOL BOARD STATE	$764,134	$764,134	$764,134	5.69700	$4,353.27
SCHOOL BOARD LOCAL	$764,134	$764,134	$764,134	1.50000	$1,146.20
TOWN OF LADY LAKE	$764,134	$764,134	$764,134	3.55100	$2,713.44
ST JOHNS RIVER FL WATER MGMT DIST	$764,134	$764,134	$764,134	0.30230	$231.00
LAKE COUNTY VOTED DEBT SERVICE	$764,134	$764,134	$764,134	0.16000	$122.26
LAKE COUNTY WATER AUTHORITY	$764,134	$764,134	$764,134	0.25540	$195.16
NORTH LAKE HOSPITAL DIST	$764,134	$764,134	$764,134	1.00000	$764.13
				Total: 18.2337	**Total:** $13,932.99

Exemptions Information

This property is benefitting from the following exemptions with a checkmark √

First Homestead Exemption (up to $25,000)	Learn More View the Law
Additional Homestead Exemption (up to an additional $25,000)	Learn More View the Law
Limited Income Senior Exemption (applied to county millage - up to $50,000)	Learn More View the Law
Limited Income Senior Exemption (applied to city millage - up to $25,000)	Learn More View the Law
Limited Income Senior 25 Year Residency (county millage only-exemption amount varies)	Learn More View the Law
Widow / Widower Exemption (up to $500)	Learn More View the Law
Blind Exemption (up to $500)	Learn More View the Law
Disability Exemption (up to $500)	Learn More View the Law
Total Disability Exemption (amount varies)	Learn More View the Law
Veteran's Disability Exemption ($5000)	Learn More View the Law
Veteran's Total Disability Exemption (amount varies)	Learn More View the Law
Veteran's Combat Related Disability Exemption (amount varies)	Learn More View the Law
Deployed Servicemember Exemption (amount varies)	Learn More View the Law
Surviving Spouse of First Responder Exemption (amount varies)	Learn More View the Law
Conservation Exemption (amount varies)	Learn More View the Law
Tangible Personal Property Exemption (up to $25,000)	Learn More View the Law
Religious, Charitable, Institutional, and Organizational Exemptions (amount varies)	Learn More View the Law
Government Exemption (amount varies)	Learn More View the Law

Exemption Savings

The exemptions marked with a √ above are providing a tax dollar savings of:

$0.00

Assessment Reduction Information (3% cap, 10% cap, Agricultural, Portability, etc.)

This property is benefitting from the following assessment reductions with a checkmark √

Save Our Homes Assessment Limitation (3% assessed value cap)	Learn More View the Law

Save Our Homes Assessment Transfer (Portability)	Learn More View the Law
Non-Homestead Assessment Limitation (10% assessed value cap)	Learn More View the Law
Conservation Classification Assessment Limitation	Learn More View the Law
Agricultural Classification	Learn More View the Law

Assessment Reduction Savings

The assessment reductions marked with a ✓ above are providing a tax dollar savings of: $0.00

Copyright © 2014 Lake County Property Appraiser. All rights reserved.
Property data last updated on 3 April 2016.

NEEL-SCHAFFER
Solutions you can build upon

engineers
planners
surveyors
environmental scientists
landscape architects

April 27, 2016

Mrs. Wendy Then
Town of Lady Lake
409 Fennell Blvd.
Lady Lake, FL 32159

REFERENCE: WATER OAK ESTATES – WILLOW WAY
ENGINEER REVIEW NO. 2

Dear Wendy;

Pursuant to your request, Neel-Schaffer, Inc. (NSI) has reviewed the development plans submitted by Atwell received by the Town, for the above referenced project. Our efforts in reviewing the development documents focused on General plan details, Environmental Protection, Utilities, Grading, Drainage and Stormwater based on the standards provided in the Land Development Code Regulations (LDCR) of the Town of Lady Lake.

Based on our review of the additional information provided by your office, NSI has found the development plans satisfactory and in compliance with the Lady Lake LDRs. If you have questions or comments, please do not hesitate to contact me at 407-647-6623.

Sincerely,

Steven R. Cockerham, P.E.
Senior Project Manager

2301 Lucien Way, Suite 300 • Maitland, FL 32751 • 407-647-6623 fax: 407-539-0575

Villages Public Safety

Villages Center Community Development District.
3035 Morse Blvd
The Villages, Florida 32162
(352)205 8280
(352) 2058290 fax

Date: April 19, 2016

Lady Lake Outpatient Clinic

Reviewed hard copy of plans.

1. Can the FDC be located on the building?
2. Show detail of the fire line. Pipe schedule, restraints, thrust blocks.

The Villages Public Safety has no other comments on this project.

Capt. Daniel Hickey.
Fire Safety Inspector II
117980

Wendy Then

From: Dallas Foss <dfoss@usanova.com>
Sent: Tuesday, April 26, 2016 1:13 PM
To: Wendy Then
Subject: Surgical practice

Wendy,

I have reviewed the revised planS and have no comments at this time to the submitted plans

Dallas Foss
Town of Lady Lake
Building Official
Nova Engineering & Environmental

Sent from my Verizon Wireless 4G LTE smartphone

LAKE COUNTY
FLORIDA

April 26, 2016

Thad Carroll
Growth Management Director
Town of Lady Lake
409 Fennell Boulevard
Lady Lake, FL. 32159

Dear Mr. Carroll:

Please share this letter with your Mayor and Commissioners at the upcoming Town Commission Meeting when they hear the Specialty Orthopedic Center Major Site Plan- Phase I – MJSP 03/16-002.

Our office was contacted by some local business leaders who are supportive of the Specialty Orthopedic Center Project. They requested that we calculate the economic impacts of this project. Our team ran those reports using IMPLAN software. According to the IMPLAN software a medical office of this type with 100 full time employees will have a total annual economic impact of $23,265,953 and total impact of 184 jobs in our the local community. Additionally, IMPLAN software states there would be an annual total state and local tax revenue of $665,941.00. According to the IMPLAN software this facility will have an annual payroll in excess of $8 million. These are clearly the high wage jobs that we want to attract to Lake County. Based on these economic impacts our office would be very supportive of this type of project locating anywhere in Lake County.

We were informed that there were some traffic concerns about the location of this project. Our office is not the experts on traffic demands and road capacities. However, we are still supportive of this project at this location due to the quality and quantity of jobs that this project will create in Lady Lake and Lake County first and foremost. Secondly, any new retail or restaurant on this site will generate far more daily traffic impact than this medical office will.

We respectfully request that the Mayor and the Commissioners support this project and the creation of 100 new high wage jobs in Lady Lake and Lake County. I sincerely, apologize that we were unable to attend this meeting in person to advocate for this project. If you have any questions please contact me at 352.742.3918 or asumner@lakecountyfl.gov.

Respectfully,

Adam Sumner
Manager
Lake County Economic Development & Tourism Division

ECONOMIC DEVELOPMENT & TOURISM DEPARTMENT
P.O. BOX 7800 • 315 W. MAIN ST., TAVARES, FL 32778 • P 352.742.3918 • F 352.742.3906
Board of County Commissioners • www.lakecountyfl.gov

TIMOTHY I. SULLIVAN *District 1* | SEAN M. PARKS, *AICP, QEP* *District 2* | JIMMY CONNER *District 3* | LESLIE CAMPIONE *District 4* | WELTON G. CADWELL *District 5*

"Buy Where the Builders Buy"

Ro-mac

LUMBER & SUPPLY Inc.

RECEIVED
MAY - 3 2016
Town of Lady Lake
Town Manager's Office

April 28, 2016

Kristen Kollgaard, CMC Town Manager/Town Clerk
Municipal Complex
409 Fennell Boulevard
Lady Lake, FL 32159

Dear Ms. Kollgaard:

Ro-Mac Lumber supports the proposed zoning request for a surgery/medical center on the property located on Rolling Acres Road adjacent to our property and ask that the rezoning request be granted.

Sincerely yours,

RO-MAC LUMBER & SUPPLY, INC.

H. D. Robuck, Jr., President

HDR/kad

610 East Main Street Leesburg, FL 34748 (352) 314-3177

St. Johns River
Water Management District
Ann B. Shortelle, Ph.D., Executive Director

4049 Reid Street • P.O. Box 1429 • Palatka, FL 32178-1429 • (386) 329-4500
On the Internet at www.sjrwmd.com.

April 22, 2016

Surgical Practice Resource Group of Florida, Inc.
Ste 1
913 Venture Ave
Leesburg, FL 34748-6695

SUBJECT: Permit Number 145706-1
SPRG of Florida Lady Lake - Outpatient Clinical Building

Dear Sir/Madam:

Enclosed is your individual permit issued by the St. Johns River Water Management District on April 22, 2016. This permit is a legal document and should be kept with your other important documents. Permit issuance does not relieve you from the responsibility of obtaining any necessary permits from any federal, state, or local agencies for your project.

Technical Staff Report:
If you wish to review a copy of the Technical Staff Report (TSR) that provides the District's staff analysis of your permit application, you may view the TSR by going to the Permitting section of the District's website at floridaswater.com/permitting. Using the "search applications and permits" feature, you can use your permit number or project name to find information about the permit. When you see the results of your search, click on the permit number and then on the TSR folder.

Noticing Your Permit:
For noticing instructions, please refer to the noticing materials in this package regarding closing the point of entry for someone to challenge the issuance of your permit. Please note that if a timely petition for administrative hearing is filed, your permit will become nonfinal and any activities that you choose to undertake pursuant to your permit will be at your own risk.

Compliance with Permit Conditions:
To submit your required permit compliance information, go to the District's website at floridaswater.com/permitting. Under the "Apply for a permit or submit compliance data" section, click to sign-in to your existing account or to create a new account. Select the "Compliance Submittal" tab, enter your permit number, and select "No Specific Date" for the Compliance Due Date Range. You will then be able to view all the compliance submittal requirements for your project. Select the compliance item that you are ready to submit and then attach the appropriate information or form. The forms to comply with your permit conditions are available at floridaswater.com/permitting under the section "Handbooks, forms, fees, final orders". Click on forms to view all permit compliance forms, then scroll to the ERP application forms section and select the applicable compliance forms. Alternatively, if you have difficulty finding forms or need copies of the appropriate forms, please contact the Office of Business and Administrative Services at (386) 329-4570.

Transferring Your Permit:
Your permit requires you to notify the District within 30 days of any change in ownership or control of the project or activity covered by the permit, or within 30 days of any change in

GOVERNING BOARD

John A. Miklos, CHAIRMAN ORLANDO
Fred N. Roberts Jr., VICE CHAIRMAN OCALA
Chuck Drake, SECRETARY ORLANDO
Carla Yetter, TREASURER FERNANDINA BEACH
Douglas C. Bournique VERO BEACH
John P. Browning, Jr. EAST PALATKA
Douglas Burnett ST. AUGUSTINE
Maryam H. Ghyabi ORMOND BEACH
Ron Howse COCOA

ownership or control of the real property on which the permitted project or activity is located or occurs. You will need to provide the District with the information specified in rule 62-330.340, Florida Administrative Code (F.A.C.). Generally, this will require you to complete and submit Form 62-330.340(1), "Request to Transfer Permit," available at http://www.floridaswater.com/permitting/permitforms.html.

Please note that a permittee is liable for compliance with the permit before the permit is transferred. The District, therefore, recommends that you request a permit transfer in advance in accordance with the applicable rules. You are encouraged to contact District staff for assistance with this process.

Thank you and please let us know if you have additional questions. For general questions contact e-permit@sjrwmd.com or (386) 329-4570.

Sincerely,

M. Daniels

Margaret Daniels, Office Director
Office of Business and Administrative Services
St. Johns River Water Management District
4049 Reid Street
Palatka, FL 32177-2529
(386) 329-4570

Enclosures: Permit

cc: District Permit File

Engineering Consultant: Chris S Grammier
Littlejohn
Ste 200
1615 Edgewater Dr
Orlando, FL 32804-5855

ST. JOHNS RIVER WATER MANAGEMENT DISTRICT
Post Office Box 1429
Palatka, Florida 32178-1429

PERMIT NO: 145706-1 **DATE ISSUED:** April 22, 2016

PROJECT NAME: SPRG of Florida Lady Lake - Outpatient Clinical Building

A PERMIT AUTHORIZING:

Construction and operation of a stormwater management system for a 9.77 - acre project known as SPRG of Florida Lady Lake - Outpatient Clinical Building, as per plans received by the District on April 22, 2016.

LOCATION:
SECTION(S): 17 TOWNSHIP(S): 18S RANGE(S): 24E
Lake County

ISSUED TO:
Surgical Practice Resource Group of Florida, Inc.
Ste 1
913 Venture Ave
Leesburg, FL 34748-6695

The permittee agrees to hold and save the St. Johns River Water Management District and its successors harmless from any and all damages, claims, or liabilities which may arise from permit issuance. Said application, including all plans and specifications attached thereto, is by reference made a part hereof.

This permit does not convey to the permittee any property rights nor any rights or privileges other than those specified herein, nor relieve the permittee from complying with any law, regulation or requirement affecting the rights of other bodies or agencies. All structures and works installed by permittee hereunder shall remain the property of the permittee.

This permit may be revoked, modified or transferred at any time pursuant to the appropriate provisions of Chapter 373, Florida Statutes.

PERMIT IS CONDITIONED UPON:
See conditions on attached "Exhibit A", dated April 22, 2016
AUTHORIZED BY: St. Johns River Water Management District
Division of Regulatory Services

By: David Dewey

David Dewey
Regulatory Coordinator

"EXHIBIT A"
CONDITIONS FOR ISSUANCE OF PERMIT NUMBER 145706-1
SPRG of Florida Lady Lake - Outpatient Clinical Building
DATE ISSUED April 22, 2016

1. All activities shall be implemented as set forth in the plans, specifications and performance criteria as approved by this permit. Any deviation from the permitted activity and the conditions for undertaking that activity shall constitute a violation of this permit.

2. This permit or a copy thereof, complete with all conditions, attachments, exhibits, and modifications, shall be kept at the work site of the permitted activity. The complete permit shall be available for review at the work site upon request by District staff. The permittee shall require the contractor to review the complete permit prior to commencement of the activity authorized by this permit.

3. Activities approved by this permit shall be conducted in a manner which do not cause violations of state water quality standards.

4. Prior to and during construction, the permittee shall implement and maintain all erosion and sediment control measures (best management practices) required to retain sediment on-site and to prevent violations of state water quality standards. All practices must be in accordance with the guidelines and specifications in chapter 6 of the Florida Land Development Manual: A Guide to Sound Land and Water Management (Florida Department of Environmental Regulation 1988), which are incorporated by reference, unless a project specific erosion and sediment control plan is approved as part of the permit, in which case the practices must be in accordance with the plan. If site specific conditions require additional measures during any phase of construction or operation to prevent erosion or control sediment, beyond those specified in the erosion and sediment control plan, the permittee shall implement additional best management practices as necessary, in accordance with the specifications in chapter 6 of the Florida Land Development Manual: A Guide to Sound Land and Water Management (Florida Department of Environmental Regulation 1988). The permittee shall correct any erosion or shoaling that causes adverse impacts to the water resources.

5. Stabilization measures shall be initiated for erosion and sediment control on disturbed areas as soon as practicable in portions of the site where construction activities have temporarily or permanently ceased, but in no case more than 7 days after the construction activity in that portion of the site has temporarily or permanently ceased.

6. At least 48 hours prior to commencement of activity authorized by this permit, the permittee shall submit to the District a Construction Commencement Notice Form No. 40C-4.900(3) indicating the actual start date and the expected completion date.

7. When the duration of construction will exceed one year, the permittee shall submit construction status reports to the District on an annual basis utilizing an Annual Status Report Form No. 40C-4.900(4). These forms shall be submitted during June of each year.

8. For those systems which will be operated or maintained by an entity which will require an easement or deed restriction in order to provide that entity with the authority necessary to operate or maintain the system, such easement or deed restriction, together with any other final operation or maintenance documents as are required by subsections 7.1.1 through 7.1.4 of the Applicant's Handbook: Management and Storage of Surface Waters, must be submitted to the District for approval. Documents meeting the requirements set forth in these subsections of the Applicant's Handbook will be approved. Deed restrictions, easements and other operation and maintenance documents which require recordation

either with the Secretary of State or the Clerk of the Circuit Court must be so recorded prior to lot or unit sales within the project served by the system, or upon completion of construction of the system, whichever occurs first. For those systems which are proposed to be maintained by county or municipal entities, final operation and maintenance documents must be received by the District when maintenance and operation of the system is accepted by the local governmental entity. Failure to submit the appropriate final documents referenced in this paragraph will result in the permittee remaining liable for carrying out maintenance and operation of the permitted system.

9. Each phase or independent portion of the permitted system must be completed in accordance with the permitted plans and permit conditions prior to the initiation of the permitted use of site infrastructure located within the area served by the portion or phase of the system. Each phase or independent portion of the system must be completed in accordance with the permitted plans and permit conditions prior to transfer of responsibility for operation and maintenance of that phase or portion of the system to local government or other responsible entity.

10. Within 30 days after completion of construction of the permitted system, or independent portion of the system, the permittee shall submit a written statement of completion and certification by a registered professional engineer or other appropriate individual as authorized by law, utilizing As Built Certification Form 40C-1.181(13) or 40C-1.181(14) supplied with this permit. When the completed system differs substantially from the permitted plans, any substantial deviations shall be noted and explained and one copy of as-built drawings submitted to the District. Submittal of the completed form shall serve to notify the District that the system is ready for inspection. The statement of completion and certification shall be based on on-site observation of construction (conducted by the registered professional engineer, or other appropriate individual as authorized by law, or under his or her direct supervision) or review of as-built drawings for the purpose of determining if the work was completed in compliance with approved plans and specifications. As-built drawings shall be the permitted drawings revised to reflect any changes made during construction. Both the original and any revised specifications must be clearly shown. The plans must be clearly labeled as "as-built" or "record" drawing. All surveyed dimensions and elevations shall be certified by a registered surveyor. The following information, at a minimum, shall be verified on the as-built drawings:

    1. Dimensions and elevations of all discharge structures including all weirs, slots, gates, pumps, pipes, and oil and grease skimmers;

    2. Locations, dimensions, and elevations of all filter, exfiltration, or underdrain systems including cleanouts, pipes, connections to control structures, and points of discharge to the receiving waters;

    3. Dimensions, elevations, contours, or cross-sections of all treatment storage areas sufficient to determine state-storage relationships of the storage area and the permanent pool depth and volume below the control elevation for normally wet systems, when appropriate;

    4. Dimensions, elevations, contours, final grades, or cross-sections of the system to determine flow directions and conveyance of runoff to the treatment system;

    5. Dimensions, elevations, contours, final grades, or cross-sections of all conveyance systems utilized to convey off-site runoff around the system;

    6. Existing water elevation(s) and the date determined; and Elevation and location of benchmark(s) for the survey.

11. The operation phase of this permit shall not become effective until the permittee has submitted the appropriate As-Built Certification Form, the District determines the system to be in compliance with the permitted plans, and the entity approved by the District in accordance with subsections 7.1.1 through 7.1.4 of the Applicant's Handbook: Management and Storage of Surface Waters, accepts responsibility for operation and maintenance of the system. The permit may not be transferred to such an approved operation and maintenance entity until the operation phase of the permit becomes effective. Following inspection and approval of the permitted system by the District, the permittee shall request transfer of the permit to the responsible approved operation and maintenance entity, if different from the permittee. Until the permit is transferred pursuant to section 7.1 of the Applicant's Handbook: Management and Storage of Surface Waters, the permittee shall be liable for compliance with the terms of the permit.

12. Should any other regulatory agency require changes to the permitted system, the permittee shall provide written notification to the District of the changes prior implementation so that a determination can be made whether a permit modification is required.

13. This permit does not eliminate the necessity to obtain any required federal, state, local and special district authorizations prior to the start of any activity approved by this permit. This permit does not convey to the permittee or create in the permittee any property right, or any interest in real property, nor does it authorize any entrance upon or activities on property which is not owned or controlled by the permittee, or convey any rights or privileges other than those specified in the permit and chapter 40C-4 or chapter 40C-40, F.A.C.

14. The permittee shall hold and save the District harmless from any and all damages, claims, or liabilities which may arise by reason of the activities authorized by the permit or any use of the permitted system.

15. Any delineation of the extent of a wetland or other surface water submitted as part of the permit application, including plans or other supporting documentation, shall not be considered specifically approved unless a specific condition of this permit or a formal determination under rule 40C-1.1006, F.A.C., provides otherwise.

16. The permittee shall notify the District in writing within 30 days of any sale, conveyance, or other transfer of ownership or control of the permitted system or the real property at which the permitted system is located. All transfers of ownership or transfers of a permit are subject to the requirements of rule 40C-1.612, F.A.C. The permittee transferring the permit shall remain liable for any corrective actions that may be required as a result of any permit violations prior to such sale, conveyance or other transfer.

17. Upon reasonable notice to the permittee, District authorized staff with proper identification shall have permission to enter, inspect, sample and test the system to insure conformity with the plans and specifications approved by the permit.

18. If historical or archaeological artifacts are discovered at any time on the project site, the permittee shall immediately notify the District.

19. The permittee shall immediately notify the District in writing of any previously submitted information that is later discovered to be inaccurate.

20. This permit for construction will expire five years from the date of issuance.

21. At a minimum, all retention and detention storage areas must be excavated to rough grade prior to building construction or placement of impervious surface within the area to be served by those facilities. To prevent reduction in storage volume and percolation rates, all

accumulated sediment must be removed from the storage area prior to final grading and stabilization.

22. All wetland areas or water bodies that are outside the specific limits of construction authorized by this permit must be protected from erosion, siltation, scouring or excess turbidity, and dewatering.

23. The operation and maintenance entity shall inspect the stormwater or surface water management system once within two years after the completion of construction and every two years thereafter to determine if the system is functioning as designed and permitted. The operation and maintenance entity must maintain a record of each required inspection, including the date of the inspection, the name and contact information of the inspector, and whether the system was functioning as designed and permitted, and make such record available for inspection upon request by the District during normal business hours. If at any time the system is not functioning as designed and permitted, then within 30 days the entity shall submit a report electronically or in writing to the District using Form 62-330.311(1), "Operation and Maintenance Inspection Certification," describing the remedial actions taken to resolve the failure or deviation.

24. This permit does not authorize any impacts to wetlands or other surface waters.

25. The proposed stormwater management system shall be constructed and operated in accordance with the plans received by the District on April 22, 2016.

Notice Of Rights

1. A person whose substantial interests are or may be affected has the right to request an administrative hearing by filing a written petition with the St. Johns River Water Management District (District). Pursuant to Chapter 28-106 and Rule 40C-1.1007, Florida Administrative Code, the petition must be filed (received) either by delivery at the office of the District Clerk at District Headquarters, P. O. Box 1429, Palatka Florida 32178-1429 (4049 Reid St., Palatka, FL 32177) or by e-mail with the District Clerk at Clerk@sjrwmd.com, within twenty-six (26) days of the District depositing the notice of District decision in the mail (for those persons to whom the District mails actual notice), within twenty-one (21) days of the District emailing the notice of District decision (for those persons to whom the District emails actual notice), or within twenty-one (21) days of newspaper publication of the notice of District decision (for those persons to whom the District does not mail or email actual notice). A petition must comply with Sections 120.54(5)(b)4. and 120.569(2)(c), Florida Statutes, and Chapter 28-106, Florida Administrative Code. The District will not accept a petition sent by facsimile (fax), as explained in paragraph no. 4 below.

2. Please be advised that if you wish to dispute this District decision, mediation may be available and that choosing mediation does not affect your right to an administrative hearing. If you wish to request mediation, you must do so in a timely-filed petition. If all parties, including the District, agree to the details of the mediation procedure, in writing, within 10 days after the time period stated in the announcement for election of an administrative remedy under Sections 120.569 and 120.57, Florida Statutes, the time limitations imposed by Sections 120.569 and 120.57, Florida Statutes, shall be tolled to allow mediation of the disputed District decision. The mediation must be concluded within 60 days of the date of the parties' written agreement, or such other timeframe agreed to by the parties in writing. Any mediation agreement must include provisions for selecting a mediator, a statement that each party shall be responsible for paying its pro-rata share of the costs and fees associated with mediation, and the mediating parties' understanding regarding the confidentiality of discussions and documents introduced during mediation. If mediation results in settlement of the administrative dispute, the District will enter a final order consistent with the settlement agreement. If mediation terminates without settlement of the dispute, the District will notify all the parties in writing that the administrative hearing process under Sections 120.569 and 120.57, Florida Statutes, is resumed. Even if a party chooses not to engage in formal mediation, or if formal mediation does not result in a settlement agreement, the District will remain willing to engage in informal settlement discussions.

3. A person whose substantial interests are or may be affected has the right to an informal administrative hearing pursuant to Sections 120.569 and 120.57(2), Florida Statutes, where no material facts are in dispute. A petition for an informal hearing must also comply with the requirements set forth in Rule 28-106.301, Florida Administrative Code.

Notice Of Rights

4. A petition for an administrative hearing is deemed filed upon receipt of the complete petition by the District Clerk at the District Headquarters in Palatka, Florida during the District's regular business hours. The District's regular business hours are 8:00 a.m. – 5:00 p.m., excluding weekends and District holidays. Petitions received by the District Clerk after the District's regular business hours shall be deemed filed as of 8:00 a.m. on the District's next regular business day. The District's acceptance of petitions filed by e-mail is subject to certain conditions set forth in the District's Statement of Agency Organization and Operation (issued pursuant to Rule 28-101.001, Florida Administrative Code), which is available for viewing at floridaswater.com. These conditions include, but are not limited to, the petition being in the form of a PDF or TIFF file and being capable of being stored and printed by the District. Further, pursuant to the District's Statement of Agency Organization and Operation, attempting to file a petition by facsimile is prohibited and shall not constitute filing.

5. Failure to file a petition for an administrative hearing within the requisite timeframe shall constitute a waiver of the right to an administrative hearing. (Rule 28-106.111, Florida Administrative Code).

6. The right to an administrative hearing and the relevant procedures to be followed are governed by Chapter 120, Florida Statutes, Chapter 28-106, Florida Administrative Code, and Rule 40C-1.1007, Florida Administrative Code. Because the administrative hearing process is designed to formulate final agency action, the filing of a petition means the District's final action may be different from the position taken by it in this notice. A person whose substantial interests are or may be affected by the District's final action has the right to become a party to the proceeding, in accordance with the requirements set forth above.

7. Pursuant to Section 120.68, Florida Statutes, a party to the proceeding before the District who is adversely affected by final District action may seek review of the action in the District Court of Appeal by filing a notice of appeal pursuant to Rules 9.110 and 9.190, Florida Rules of Appellate Procedure, within 30 days of the rendering of the final District action.

8. A District action is considered rendered, as referred to in paragraph no. 7 above, after it is signed on behalf of the District and filed by the District Clerk.

9. Failure to observe the relevant timeframes for filing a petition for judicial review as described in paragraph no. 7 above will result in waiver of that right to review.

Notice Of Rights

Certificate of Service

I HEREBY CERTIFY that a copy of the foregoing Notice of Rights has been sent to the permittee:

Surgical Practice Resource Group of Florida, Inc.
Ste 1
913 Venture Ave
Leesburg, FL 34748-6695

This 22nd day of April, 2016.

M. Daniels

Margaret Daniels, Office Director
Office of Business and Administrative Services
St. Johns River Water Management District
4049 Reid Street
Palatka, FL 32177-2529
(386) 329-4570

Permit Number: 145706-1

NOTICING INFORMATION

Dear Permittee:

Please be advised that the St. Johns River Water Management District will not publish a notice in the newspaper advising the public that it has issued a permit for this project.

Newspaper publication, using the District's notice form, notifies members of the public of their right to challenge the issuance of the permit. If proper notice is given by newspaper publication, then there is a 21-day time limit for someone to file a petition for an administrative hearing to challenge the issuance of the permit.

To close the point of entry for filing a petition, you may publish (at your own expense) a one-time notice of the District's decision in a newspaper of general circulation within the affected area as defined in Section 50.011 of the Florida Statutes. If you do not publish a newspaper notice to close the point of entry, the time to challenge the issuance of your permit will not expire and someone could file a petition even after your project is constructed.

A copy of the notice form and a partial list of newspapers of general circulation are attached for your convenience. However, you are not limited to those listed newspapers. If you choose to close the point of entry and the notice is published, the newspaper will return to you an affidavit of publication. In that event, it is important that you either submit a scanned copy of the affidavit by emailing it to *compliancesupport@sjrwmd.com* (preferred method) **or** send a copy of the original affidavit to:

Margaret Daniels, Office Director
Office of Business and Administrative Services
4049 Reid Street
Palatka, FL 32177

If you have any questions, please contact the Office of Business and Administrative Services at (386) 329-4570.

Sincerely,

M. Daniels

Margaret Daniels, Office Director

Office of Business and Administrative Services

NOTICE OF AGENCY ACTION TAKEN BY THE
ST. JOHNS RIVER WATER MANAGEMENT DISTRICT

Notice is given that the following permit was issued on _____:

(Name and address of applicant)_____
permit#_____. The project is located in _____County, Section _____, Township _____ South, Range _____ East. The permit authorizes a surface water management system on _____ acres for _____ known as _____. The receiving water body is _____.

A person whose substantial interests are or may be affected has the right to request an administrative hearing by filing a written petition with the St. Johns River Water Management District (District). Pursuant to Chapter 28-106 and Rule 40C-1.1007, Florida Administrative Code (F.A.C.), the petition must be filed (received) either by delivery at the office of the District Clerk at District Headquarters, P.O. Box 1429, Palatka FL 32178-1429 (4049 Reid St, Palatka, FL 32177) or by e-mail with the District Clerk at Clerk@sjrwmd.com, within twenty-one (21) days of newspaper publication of the notice of District decision (for those persons to whom the District does not mail or email actual notice). A petition must comply with Sections 120.54(5)(b)4. and 120.569(2)(c), Florida Statutes (F.S.), and Chapter 28-106, F.A.C. The District will not accept a petition sent by facsimile (fax). Mediation pursuant to Section 120.573, F.S., may be available and choosing mediation does not affect your right to an administrative hearing.

A petition for an administrative hearing is deemed filed upon receipt of the complete petition by the District Clerk at the District Headquarters in Palatka, Florida during the District's regular business hours. The District's regular business hours are 8 a.m. – 5 p.m., excluding weekends and District holidays. Petitions received by the District Clerk after the District's regular business hours shall be deemed filed as of 8 a.m. on the District's next regular business day. The District's acceptance of petitions filed by e-mail is subject to certain conditions set forth in the District's Statement of Agency Organization and Operation (issued pursuant to Rule 28-101.001, Florida Administrative Code), which is available for viewing at floridaswater.com. These conditions include, but are not limited to, the petition being in the form of a PDF or TIFF file and being capable of being stored and printed by the District. Further, pursuant to the District's Statement of Agency Organization and Operation, attempting to file a petition by facsimile (fax) is prohibited and shall not constitute filing.

The right to an administrative hearing and the relevant procedures to be followed are governed by Chapter 120, Florida Statutes, Chapter 28-106, Florida Administrative Code, and Rule 40C-1.1007, Florida Administrative Code. Because the administrative hearing process is designed to formulate final agency action, the filing of a petition means the District's final action may be different from the position taken by it in this notice. **Failure to file a petition for an administrative hearing within the requisite time frame shall constitute a waiver of the right to an administrative hearing. (Rule 28-106.111, F.A.C.).**

If you wish to do so, please visit http://floridaswater.com/nor_dec/ to read the complete Notice of Rights to determine any legal rights you may have concerning the District's decision(s) on the permit application(s) described above. You can also request the Notice of Rights by contacting the Director of Regulatory Support, 4049 Reid St., Palatka, FL 32177-2529, tele. no.

NEWSPAPER ADVERTISING

ALACHUA
The Alachua County Record, Legal Advertising
P. O. Box 806
Gainesville, FL 32602
352-377-2444/ fax 352-338-1986

BRAFORD
Bradford County Telegraph, Legal Advertising
P. O. Drawer A
Starke, FL 32901
904-964-6305/ fax 904-964-8628

CLAY
Clay Today, Legal Advertising
1560 Kinsley Ave., Suite 1
Orange Park, FL 32073
904-264-3200/ fax 904-264-3285

FLAGLER
Flagler Tribune, c/o News Journal
P. O. Box 2831
Daytona Beach, FL 32120-2831
386- 681-2322

LAKE
Daily Commercial, Legal Advertising
P. O. Drawer 490007
Leesburg, FL 34749
352-365-8235/fax 352-365-1951

NASSAU
News-Leader, Legal Advertising
P. O. Box 766
Fernandina Beach, FL 32035
904-261-3696/fax 904-261-3698

ORANGE
Sentinel Communications, Legal Advertising
633 N. Orange Avenue
Orlando, FL 32801
407-420-5160/ fax 407-420-5011

PUTNAM
Palatka Daily News, Legal Advertising
P. O. Box 777
Palatka, FL 32178
386-312-5200/ fax 386-312-5209

SEMINOLE
Seminole Herald, Legal Advertising
300 North French Avenue
Sanford, FL 32771
407-323-9408

BAKER
Baker County Press, Legal Advertising
P. O. Box 598
Maclenny, FL 32063
904-259-2400/ fax 904-259-6502

BREVARD
Florida Today, Legal Advertising
P. O. Box 419000
Melbourne, FL 32941-9000
321-242-3832/ fax 321-242-6618

DUVAL
Daily Record, Legal Advertising
P. O. Box 1769
Jacksonville, FL 32201
904-356-2466 / fax 904-353-2628

INDIAN RIVER
Vero Beach Press Journal, Legal Advertising
P. O. Box 1268
Vero Beach, FL 32961-1268
772-221-4282/ fax 772-978-2340

MARION
Ocala Star Banner, Legal Advertising
2121 SW 19th Avenue Road
Ocala, FL 34474
352-867-4010/fax 352-867-4126

OKEECHOBEE
Okeechobee News, Legal Advertising
P. O. Box 639
Okeechobee, FL 34973-0639
863-763-3134/fax 863-763-5901

OSCEOLA
Little Sentinel, Legal Advertising
633 N. Orange Avenue
Orlando, FL 32801
407-420-5160/ fax 407-420-5011

ST. JOHNS
St. Augustine Record, Legal Advertising
P. O. Box 1630
St. Augustine, FL 32085
904-819-3436

VOLUSIA
News Journal Corporation, Legal Advertising
P. O. Box 2831
Daytona Beach, FL 32120-2831
(386) 681-2322

Wendy Then

From: Beck, Christopher <CBeck2@wm.com>
Sent: Tuesday, March 22, 2016 2:06 PM
To: Wendy Then
Subject: RE: Specialty Orthopedic Clinic MJSP 03/16-002

Good Afternoon Wendy,

After looking over the site plans, the dumpster enclosure meets WM specs.

Thanks,

Chris Beck
Wildwood Hauling
352-330-4546
352-267-9356

From: Wendy Then [mailto:wthen@ladylake.org]
Sent: Tuesday, March 22, 2016 9:42 AM
To: Beck, Christopher
Subject: Specialty Orthopedic Clinic MJSP 03/16-002

Good Morning Chris,

Please find attached a major site plan application and plans for a proposed 26,540-square-foot the multi-specialty medical facility to be constructed along Rolling Acres Rd.

Please review and have comments to us by Friday, April 8, 2016.

Let us know if you need any additional information to complete your review.

Thanks.

Wendy Then, CFM
Town Planner
Town of Lady Lake
409 Fennell Blvd.
Lady Lake, FL 32159
352-751-1582
352-751-1514- Fax

Fla. Stat. 668.6076 "Under Florida law, e-mail addresses are public records. If you do not want your e-mail address released in response to a public-records request, do not send electronic mail to this entity. Instead, contact this office by phone or in writing."

SPECIAL TOWN COMMISSION - CONCEPTUAL WORKSHOP AGENDA ITEM

REQUESTED COMMITTEE MEETING DATE: April 18, 2016

SUBJECT: **Conceptual Presentation for the Specialty Orthopedic Center Major Site Plan- Phase I – MJSP 03/16-002 –For a development proposing a 26,540-square-foot multi-specialty medical facility to be constructed along Rolling Acres Road on a +/- 9.77-acre parcel at 539 Rolling Acres Road (Alternate Key 1279488).**

DEPARTMENT: **GROWTH MANAGEMENT**

RECOMMENDED MOTION:

Staff recommends advancing the site plan as presented since site specifications, as required per Town of Lady Lake Land Development Regulations, have been applied to the best extent practicable, *with the following waivers:*

- **Chapter 10, Section 10-3. b).B).4).- Waiver request for the North Elevation regarding Buffer width and plant material reduction**
- **Chapter 10, Section 10-3. b).B).3).- Waiver request for the South Elevation regarding Buffer width and plant material reduction**

SUMMARY:

George Huddleston with Littlejohn Engineering Associates, Inc., has submitted a site plan application for a 9.77 +/- acre parcel located at 539 Rolling Acres Road. The applicant proposes the construction of a 26,540-Square-foot building for a Multi-Specialty Clinic Facility. The property is zoned Industrial, which permits the proposed medical office/clinic use. The Future Land Use Map designation for the site is Industrial (I). This particular piece of property is located just south of the Villages Industrial Center and north of the Citizen's First Bank Processing Center and the Fort Knox Storage Facility. This is one of the few remaining undeveloped properties on that section of Rolling Acres Road north of Highway 466. The property is expected to be developed in two (2) phases.

The site plan was reviewed to determine if it is in compliance with the Land Development Regulations (LDRs) including parking, setbacks, landscaping, engineering,

environmental protection and commercial design standards. The applications were determined to be in compliance with the Land Development Regulations (LDRs) and the Comprehensive Plan.

Commercial Design Standard

Attached are the site plan and façade elevations for the Specialty Orthopedic Center:

In accordance with the Land Development Regulations, **Chapter 20, Section 20-3C).3).A)**., new buildings should adopt one of the four recommended architectural styles: Frame Vernacular, Craftsman/Bungalow, Mediterranean, or Mission.

The Specialty Orthopedic Center Facility exhibits a Modern Architectural Design style featuring white cement plaster, metal wall panels, split face concrete block, glass doors and windows throughout the different exterior wall elevations of the building.

- ✓ Primary entrance oriented towards the public right-of-way featuring a Portico
- ✓ Substantial architectural elements that projects/recesses from the building
- ✓ Facades includes changes in place, arcades, change in compatible material, changes in texture, doors and windows
- ✓ Primary façade features public entrances, roof treatments, awnings, and landscaping
- ✓ Secondary and rear entrances include architectural embellishments such as awnings and landscaping
- ✓ All glazing is transparent
- ✓ Rooftops consists of steeped parapets of different colored material

Tree Requirements:

In accordance with Chapter 10-Landscape and Tree Protection, the site is required to provide 931.2 tree caliper inches based on its 5.82-acre site development area (160"x 5.82 acres). Please see the landscaping tree proposal breakdown:

Existing Trees to remain	93 tree caliper inches
Proposed Canopy & Understory Trees	867 tree caliper inches
Total tree caliper inches	960 tree caliper inches

The applicant is providing more than the required on-site tree caliper inches.

Notes:

- A 65" history oak tree is proposed to be preserved and no historic trees are proposed to be removed for this development.

The applicant is pursuing the following ***landscaping waivers:***

- In accordance to **Chapter 10, Section 10-3. b).B).4).**, the *North* Elevation requires "Class D" Landscaping Buffer-Forty (40) feet minimum width with eight (8) canopy trees, six (6) understory trees and a continuous hedge or an approved fence or wall.

  The applicant is required to provide *56 canopy trees* and *35 understory trees.*

Request: The applicant is requesting a waiver for 13 canopy trees and to reduce the buffer width from 40 feet to 20 feet.

Justification: Buffer width reduction has been requested due to modern building layout to meet commercial design standards and to accommodate parking spaces needed for Phase I.

- In accordance to **Chapter 10, Section 10-3. b).B).3).**, the *South* Elevation requires "Class C" Landscaping Buffer- Thirty (30) feet minimum width with six (6) canopy trees, four (4) understory trees and a continuous hedge or an approved fence or wall.

  The applicant is required to provide *42 canopy trees* and *28 understory trees.*

  Request: The applicant is requesting a waiver for 7 canopy trees, 2 understory trees and to reduce the buffer width from 30 feet to 20 feet.

  Justification: Buffer width reduction has been requested due to modern building layout to meet commercial design standards and to accommodate parking spaces needed for Phase I.

Comments:

As stated, the applicant is proposing a medical office/clinic; such a use would regularly require only a Landscaping Buffer Class "A" along the boundaries if assigned under the Heavy Commercial (HC) zoning district, in which this proposed use would be permitted. However, due to the property having an Industrial Zoning designation, the project is required to provide Landscaping Buffer Class D for the north elevation and Landscaping Buffer Class C for the South elevation; which are 40 feet and 30 feet in width respectively, and require extensive plant material.

Overall, the plan material that has been proposed on-site for approximately 700 lineal feet would be the equivalent of Landscaping Buffer Class C; which is far beyond what is currently featured on adjacent and surrounding sites.

Public Meetings:

The **Technical Review Committee** members individually reviewed the application on Friday, April 8, 2016, and provided outstanding comments regarding the Site Plan application.

The **Parks, Recreation and Tree Advisory Committee** is scheduled for Wednesday, April 13, 2016; however, at the time that this packet is being prepared, vote recommendation information is not available. Town Staff will follow up with the PRT advisory committee recommendation at the conceptual meeting.

The **Town Commission** is tentatively scheduled to consider this application for final approval on Monday, May 16, 2016 at 6:00 p.m.

FISCAL IMPACT: $ _____

[ ] Capital Budget
[ ] Operating
[ ] Other

ATTACHMENTS: [ ] Ordinance(s) [ ] Resolution [ ] Budget Resolution

[X] Other – Conceptual Site Plan Documents

[ ] Support Documents/Contracts Available for Review in Manager's Office

	DEPARTMENT HEAD	Submitted 4/4/16	Date
4-11-16	FINANCE DEPARTMENT	Approved as to Budget Requirements	Date
	TOWN ATTORNEY	Approved as to Form and Legality	Date
	TOWN MANAGER	Approved Agenda Item for: 4/15/16	Date 4/15/16

BOARD ACTION: [✓] Approved as Recommended (CONSENSUS TO ADVANCE 3-2 (R10/KUS)) [ ] Disapproved

[ ] Tabled Indefinitely [ ] Continued to Date Certain [ ] Approved w/Modification

cc: THAD-DM.

VICINITY MAP

NOT TO SCALE

PERMIT DOCUMENTS

SPRG OF FLORIDA LADY LAKE - OUTPATIENT CLINICAL BUILDING

LADY LAKE, LAKE COUNTY, FLORIDA

LITTLEJOHN PROJECT NO. 20150902
3/21/2016
REV: 4/29/2016

SITE DATA

COUNCIL DISTRICT:	
COUNCIL MEMBER:	
PARCEL ID.:	17-18-24-0002-0000-1100
SITE ADDRESS:	539 ROLLING ACRES ROAD LADY LAKE, FL 32159
SITE ACREAGE:	9.774 AC.
ZONED:	INDUSTRIAL
OPEN SPACE:	7.17 AC (312,248 SF.) (73.4% OPEN SPACE/ UNDISTURBED)
PROPOSED USE:	MEDICAL OFFICE FACILITY
No. OF EMPLOYEES:	50
PROPOSED MAX. BUILDING HEIGHT:	18 FEET
ALLOWED MAX. BUILDING HEIGHT:	35 FEET
FRONT SETBACK/ BUFFER YARD:	20 FEET
SIDE SETBACKS/ BUFFER YARD:	10 FEET
REAR SETBACK/ BUFFER YARD:	10 FEET

* A WAIVER IS REQUESTED FROM THIS BUFFER YARD REQUIREMENT FROM 30' TO 20'

IMPERVIOUS SURFACE AREA

BUILDINGS:	0.61 AC. (26,540 FT^2)
DRIVES/SIDEWALKS:	2.01 AC. (87,763 FT^2)
TOTAL PROPOSED IMPERVIOUS AREA:	2.82 AC. (113,471 FT^2)

PARKING SUMMARY

PARKING REQUIRED:	133 SPACES
(PARKING REQUIREMENTS)	133 SPACES REQUIRED
PARKING PROVIDED:	
REGULAR:	127 SPACES
HANDICAP:	6 SPACES
TOTAL:	133 SPACES PROVIDED
BICYCLE PARKING REQUIRED:	4
BICYCLE PARKING PROVIDED:	4
LOADING PARKING REQUIRED:	3
LOADING PARKING PROVIDED:	3
OWNER	SPR GROUP OF FLORIDA, INC.
ADDRESS:	913 VENTURE AVENUE, SUITE #1 LEESBURG, FL 34748
PHONE NO.:	(352) 801-7992
CONTACT NAME:	STEVE ROTH
CONTACT E-MAIL ADDRESS:	sroth@sprgroup.com
PROJECT REPRESENTATIVE:	LITTLEJOHN ENGINEERING
ADDRESS:	1615 EDGEWATER DRIVE, SUITE 200 ORLANDO, FL 32804
PHONE NO.:	407.975.1273
CONTACT NAME:	CHRIS S. GRAMMIER
CONTACT E-MAIL ADDRESS:	cgrammier@leainc.com
RECORDED DOCUMENTS:	ORB/PAGE: 4689 / 996

FEMA PANEL:
A PORTION OF THE SUBJECT PROPERTY LIES WITHIN A SPECIAL FLOOD HAZARD ZONE ACCORDING TO COMMUNITY PANEL NO. 12069C0170E, LAKE COUNTY, FLORIDA, DECEMBER 18, 2012

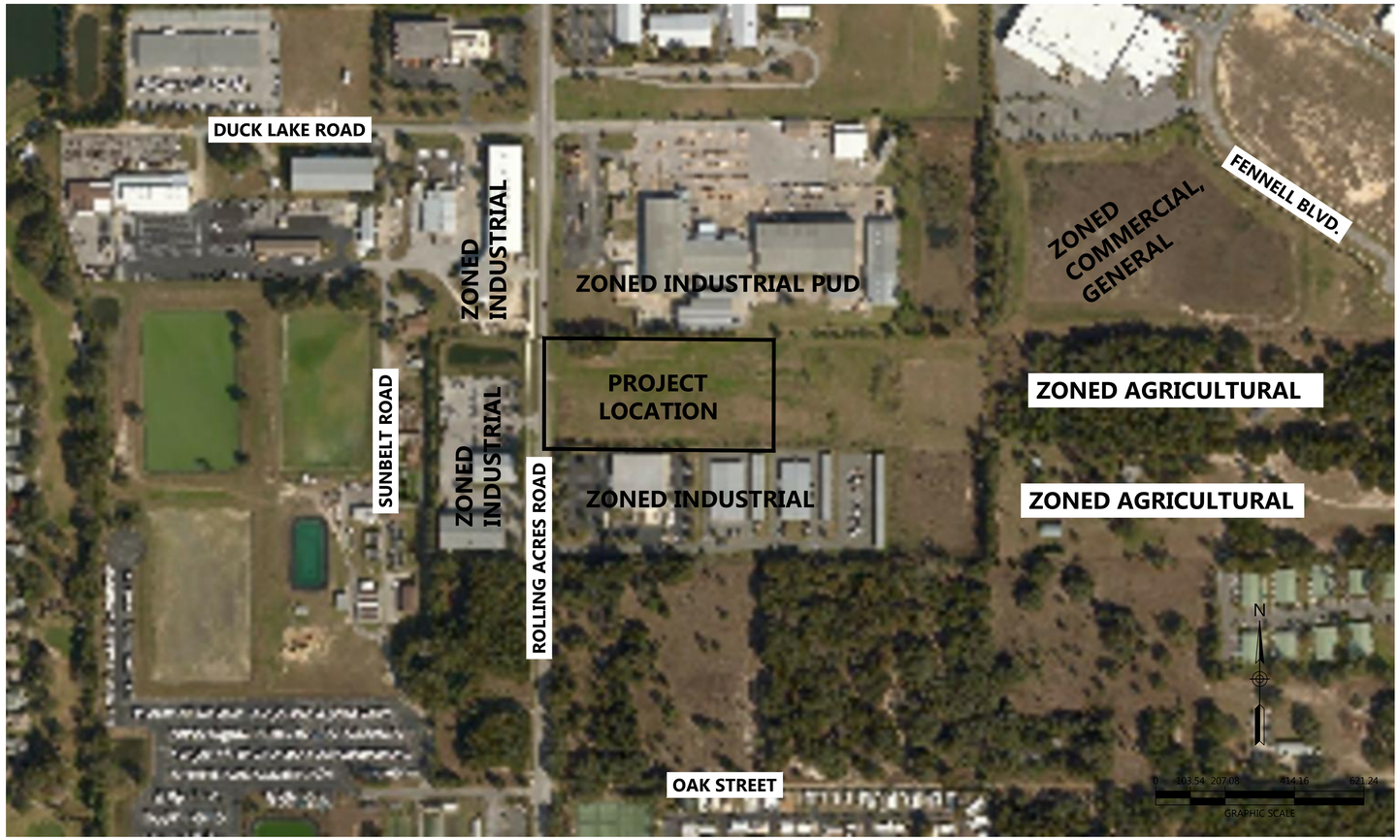

SHEET INDEX

C0.0 - COVER
C1.0 - EXISTING CONDITIONS
S1.0 - ROUTE SURVEY
C2.0 - NOTES
C3.0 - EROSION CONTROL PLAN
C3.1 - EROSION CONTROL PLAN
C3.2 - MAINTENANCE OF TRAFFIC
C3.3 - MOT PHASE I
C3.4 - MOT PHASE II
C4.0 - DEMOLITION PLAN
C4.1 - DEMOLITION PLAN
C4.2 - DEMOLITION PLAN
C5.0 - SITE LAYOUT PLAN
C5.1 - SITE LAYOUT PLAN
C5.2 - TURN LANES
C5.3 - TURN LANES
C5.4 - TURN LANES
C6.0 - GRADING & DRAINAGE PLAN
C6.1 - GRADING & DRAINAGE PLAN
C6.2 - GRADING & DRAINAGE PLAN
C7.0 - UTILITY PLAN
C7.1 - UTILITY PLAN
C8.0 - DETAILS
C8.1 - DETAILS
C8.2 - DETAILS
C8.3 - DETAILS
C8.4 - LIFT STATION DETAILS
C9.0 - CITY DETAILS
C9.1 - VCSA DETAILS
C9.2 - VCSA DETAILS
C9.3 - VCSA DETAILS
C9.4 - VCSA DETAILS
C9.5 - LADY LAKE DETAILS
C9.6 - LADY LAKE DETAILS

L1.0 - LANDSCAPE PLAN
L1.1 - LANDSCAPE PLAN
L2.0 - PLANT SCHEDULE AND NOTES
L2.1 - PLANTING DETAILS

IR-1 - IRRIGATION PLAN
IR-2 - IRRIGATION DETAILS
IR-3 - IRRIGATION DETAILS
IR-4 - IRRIGATION NOTES

P1.0 - FLOOR PLAN
P2.00 - EXTERIOR ELEVATIONS
P2.01 - EXTERIOR ELEVATIONS

E1.01 - PHOTOMETRIC LIGHTING PLAN

LEGAL DESCRIPTION:

THE NORTH 1/2 OF THE NORTH 1/2 OF THE SOUTHWEST 1/4 OF THE NORTHWEST 1/4 IN SECTION 17, TOWNSHIP 18 SOUTH, RANGE 24 EAST, LAKE COUNTY, FLORIDA, LESS THE WEST 40 FEET.

INTENDED USE: MEDICAL OFFICES, OUTPATIENT MEDICAL CLINIC

ARCHITECT
STUDIO+
2211 E 7TH AVENUE, SUITE A
TAMPA, FL 33605
(239) 357-4983

PREPARED FOR
SPR GROUP OF FLORIDA, INC.
913 VENTURE AVENUE, SUITE #1
LEESBURG, FL 34748
(352) 801-7992

CIVIL ENGINEER/LANDCSAPE ARCHITECT
Littlejohn
An S&ME Company
1615 Edgewater Drive, Suite 200, ORLANDO, FLORIDA 32804
T 407.975.1273 F 407.975.1278 www.leainc.com
Christopher S. Grammier, P.E. 69919
Jay R. Hood, PLA LA0001277
Florida Firm Registration No. 28050

ALTA/ACSM Land Title Survey
Lady Lake
Section 17, Township 18 South, Range 24 East
Lake County, Florida

Legend of Symbols & Abbreviations

- Found Iron Rod or Pipe
- Found Concrete Monument
- Found P.K. Nail & Disk
- (F) Field Measurement
- (D) Deed Reference
- Id. Identification
- L.B. Licensed Business
- OR Official Records
- P.S.M. Professional Surveyor and Mapper
- CONC Concrete
- RCP Reinforced Concrete Pipe
- Temporary Benchmark
- TBM Temporary Benchmark
- Oak
- Unknown Tree
- 39.42 Back of Curb Elevation
- 38.92 Edge of Pavement Elevation
- +x.x Spot Elevation
- +x.x Spot Elevation on Hard Surface
- Power Pole
- Guy Wire
- —X—X— Fence
- —E—E— Overhead Utility Line
- —W—W— Water Line
- —R—R— Reclaimed Water Line
- —T—T— Telephone Line
- —D—D— Drainage Pipe
- —SS—SS— Sanitary Sewer Pipe
- —FO—FO— Fiber Optic Line
- —UE—UE— Underground Electric Line
- Catch Basin
- Fire Hydrant
- Water Valve
- **Fiber Optic Vault**
- Telephone Pull Box
- Well
- Sign

Schedule B-2 Exceptions

per Fund File No. 12-2015-206637 issued by Old Republic National Title Insurance Company, bearing an effective date of July 1, 2015, at 11:00 PM.

Items not listed below are standard title exceptions and/or are not matters or issues that pertain to this survey.

(5) Reservation as contained in Warranty Deed recorded in Deed Book 79, Page 82, Public Records of Lake County, Florida. Does not affect subject property. Document reserves fifteen (15) feet along Section line for road.

(6) Declaration of Restrictive Covenants, Conditions and Restrictions recorded in O.R. Book 4002, Page 1304, Public Records of Lake County, Florida. Affects subject property however is not a matter of survey.

(7) Ordinance recorded in O.R. Book 1827 Page 514, Public Records of Lake County, Florida. Affects subject property however is not a matter of survey.

(8) Amendment Agreements recorded in O.R. Book 1986, Pages 1907, 1911 and 1915, Public Records of Lake County, Florida. Affects subject property however is not a matter of survey.

(9) Ordinance recorded in O.R. Book 2284, Page 1713, Public Records of Lake County, Florida. Affects subject property however is not a matter of survey.

(10) Interlocal Agreement recorded in O.R. Book 2299, Page 1189, Public Records of Lake County, Florida. Affects subject property however is not a matter of survey.

(11) First Amendment to Agreement between Town of Lady Lake, The Villages Center Community Development District and Lake County recorded in O.R. Book 2418, Page 1369, Public Records of Lake County, Florida. Affects subject property however is not a matter of survey.

(12) Grant of Easement recorded in O.R. Book 2144, Page 576, Public Records of Lake County, Florida. Affects subject property as depicted hereon.

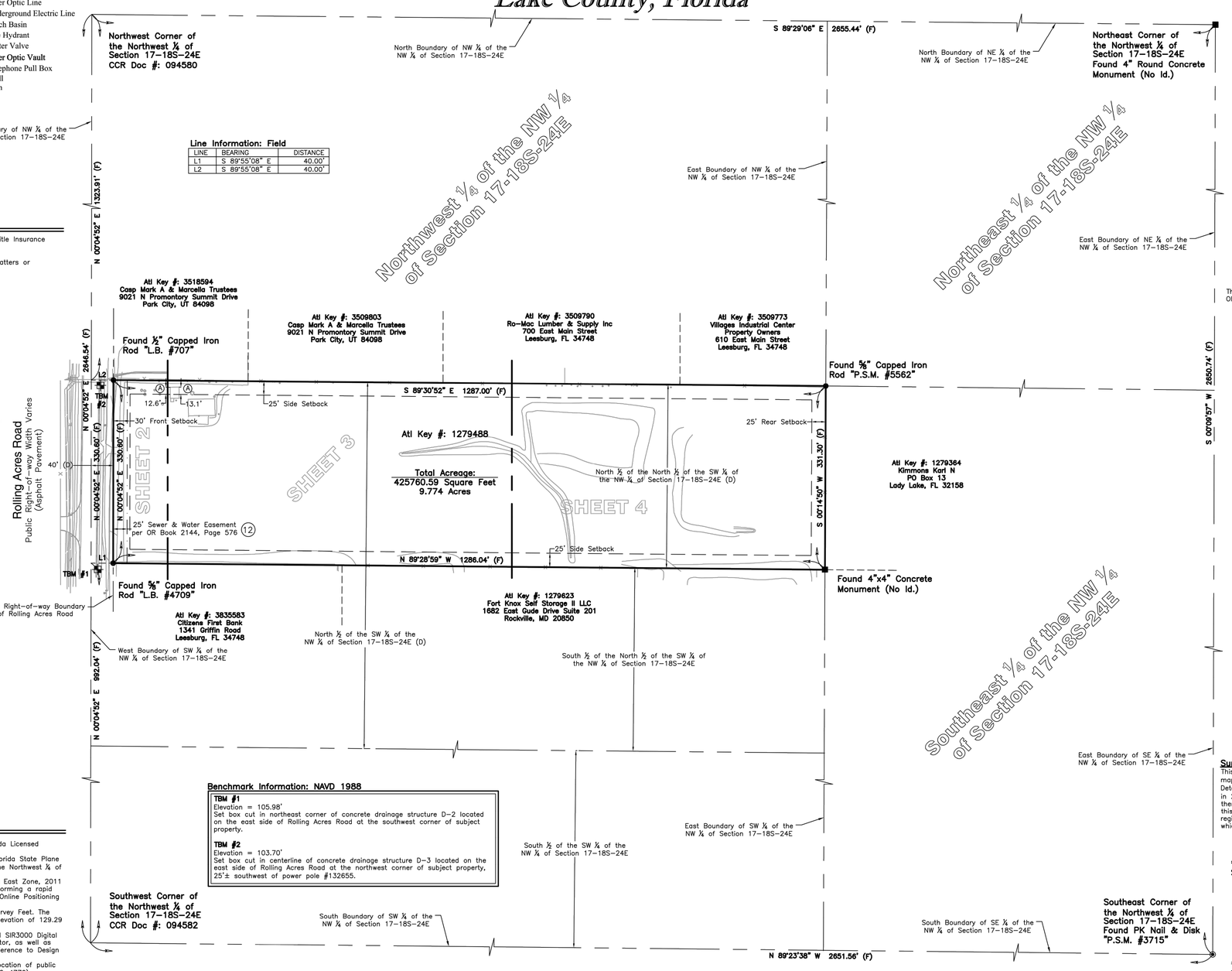

Line Information: Field

LINE	BEARING	DISTANCE
L1	S 89°55'08" E	40.00'
L2	S 89°55'08" E	40.00'

Benchmark Information: NAVD 1988

TBM #1
Elevation = 105.98'
Set box cut in northeast corner of concrete drainage structure D-2 located on the east side of Rolling Acres Road at the southwest corner of subject property.

TBM #2
Elevation = 103.70'
Set box cut in centerline of concrete drainage structure D-3 located on the east side of Rolling Acres Road at the northwest corner of subject property, 25'± southwest of power pole #132655.

0' 100' 200' 300'
Scale: 1" = 100'

Surveyor's Notes

1.) Not valid without the signature and original raised seal of a Florida Licensed Surveyor and Mapper.
2.) The bearing structure for this survey is based on a NAD 1983 Florida State Plane East Zone, bearing of S 00°09'57" W for the East Boundary of the Northwest ¼ of Section 17-18S-24E.
3.) The horizontal datum utilized for this project is NAD 1983 Florida East Zone, 2011 Adjustment, U.S. Survey Feet. Said datum was established by performing a rapid static GPS session and utilizing National Geodetic Survey's (NGS) Online Positioning User Service (OPUS).
4.) The vertical datum utilized for this project is NAVD 1988, U.S. Survey Feet. The benchmark utilized was Lake County Benchmark "F 30" with an elevation of 129.29 feet.
5.) Utilities depicted hereon were obtained using a GSSI-manufactured SIR3000 Digital Imaging Controller with a 400MHz antenna, an RD4000 utility locator, as well as markouts/information obtained from Florida Sunshine One Call, reference to Design Ticket Number 223509263.
6.) Prior to excavation it is the contractors responsibility to secure location of public utilities by contacting Sunshine State One Call of Florida (800-432-4770).
7.) No underground foundations or footers were excavated or located for this survey.
8.) Surveyor makes no guarantees as to the species of trees or to the health of each tree depicted hereon, if this information is necessary a certified arborist should be contacted.
9.) The trees shown hereon were located utilizing methods adequate for their accurate location and identification. However, this company and the signing surveyor reserves the right to verify the location of all trees critical to the design of buildings, parking and other permanent features. It is the responsibility of the design professional to inform this company and/or the signing surveyor of any trees critical to their design so that those trees can be verified prior to the completion of the design.
10.) Per Table A of the ALTA/ACSM requirements:
a.) Item 16: there is no observable evidence of current earth moving work, building construction or building additions.
b.) Item 17: there is no known proposed changes in street right-of-way and there is no observable evidence of recent street or sidewalk construction or repairs.
c.) Item 18: there is no observable evidence of site use as a solid waste dump, sump or sanitary landfill.

NUMBER OF PROVIDED PARKING SPACES	
TYPE OF SPACE	TOTAL PROVIDED
REGULAR	0
HANDICAP	0
TOTAL	0

FLOOD NOTE:
By graphic plotting only, this property is in Flood Zone "X"
Flood Insurance Rate Map: 12069C
Panel No.: 0170 H
Community Name/No.: Town of Lady Lake/120613
Effective Date: December 18, 2012

Subject Property is not in a Special Flood Hazard Area.

No field surveying was performed to determine this zone and an elevation certificate may be needed to verify this determination or apply for a variance from the Federal Emergency Management Agency.

Vicinity Map

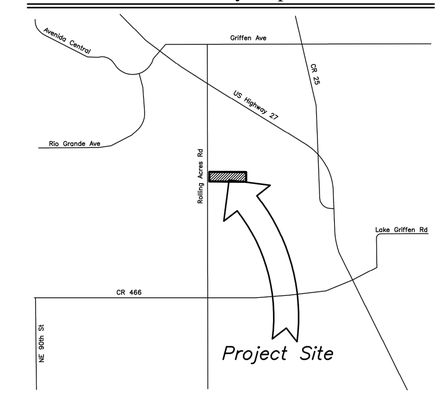

Legal Description

The North ½ of the North ½ of the Southwest ¼ of the Northwest ¼ in Section 17, Township 18 South, Range 24 East, Lake County, Florida, less the West 40 feet.

The above description is the same as the one described per Fund File No. 12-2015-206637 issued by Old Republic National Title Insurance Company, bearing an effective date of July 1, 2015 at 11:00 PM.

Zoning Information

1. ZONING: I: Industrial
Land Use: Vacant Industrial

Parking Requirements: Parking requirement is based on land use. See land development code Section 7-4.

Maximum:
Impervious Surface Ratio: 75%
Building Height: 35 Feet

Minimum Yard Requirements:
Front: 30 Feet (Collector Roadway)
Side: 25 Feet
Rear: 25 Feet

Zoning Contact: Town of Lady Lake Growth Management Department, 409 Fennell Boulevard, Lady Lake FL 32159
Phone: 352-751-1500

Note: Zoning information is depicted hereon for informational purposes only. Surveyor makes no guarantees to accuracy or interpretation of the zoning regulations.

Statement of Possible Encroachments

(A) Wood frame building encroaches into side setback.

(B) Water line encroaches into subject property without the benefit of an easement. See sheet 2 and 3.

ALTA/ACSM Land Title Survey

Lady Lake
539 Rolling Acres Road
Lady Lake, Florida 32159

Surveyor's Certification:
This is to certify to: Old Republic National Title Insurance Company and H. D. Robuck, Jr., P.A. that this map or plat and the survey on which it is based were made in accordance with the "Minimum Standard Detail Requirements for ALTA/ACSM Land Title Surveys," jointly established and adopted by ALTA and NSPS in 2011, and includes Items 1-4, 5, 6, 7(a), 7(b)(1), 7(c), 8-9, 11(b), 13, 14 and 16-18 of Table A thereof. Pursuant to the Accuracy Standards as adopted by ALTA and NSPS and in effect on the date of this certification, undersigned further certifies that in my professional opinion, as a land surveyor registered in the State of Florida the Relative Positional Accuracy of this survey does not exceed that which is specified therein.

****Not Valid Without The Signature And The Original Raised Seal Of A Florida Licensed Surveyor And Mapper****

TIMOTHY M. McCLINTIC License Number 6908 STATE OF FLORIDA Professional Surveyor and Mapper

Tim McClintic

Timothy M. McClintic
Florida Professional Surveyor and Mapper No: 6908
SurvTech Solutions, Inc.
Florida Licensed Business No. 7340

C1.0
EXISTING CONDITIONS

	REVISION	DATE	INITIALS
1	Added title policy information	9/01/15	T.M.
2	Revised certification parties	9/29/15	T.M.

SURVEYING TODAY WITH TOMORROWS TECHNOLOGY

Drafted By: T. McClintic
Date Drafted: 08/29/15
Approved By: T. McClintic
Date Approved: 08/31/15
Phase: 1
Drawing Name: 20150368_1T
Field Date: 08/19/15
Field Book/Page: 15-14/44

SURVTECH SOLUTIONS, INC.
10220 U.S. Highway 92 East
Tampa, FL 33610
phone: (813)-621-4929
fax: (813)-621-7194
Licensed Business #7340
email: tmcclintic@survtechsolutions.com
http://www.survtechsolutions.com

Underground Utility Detail

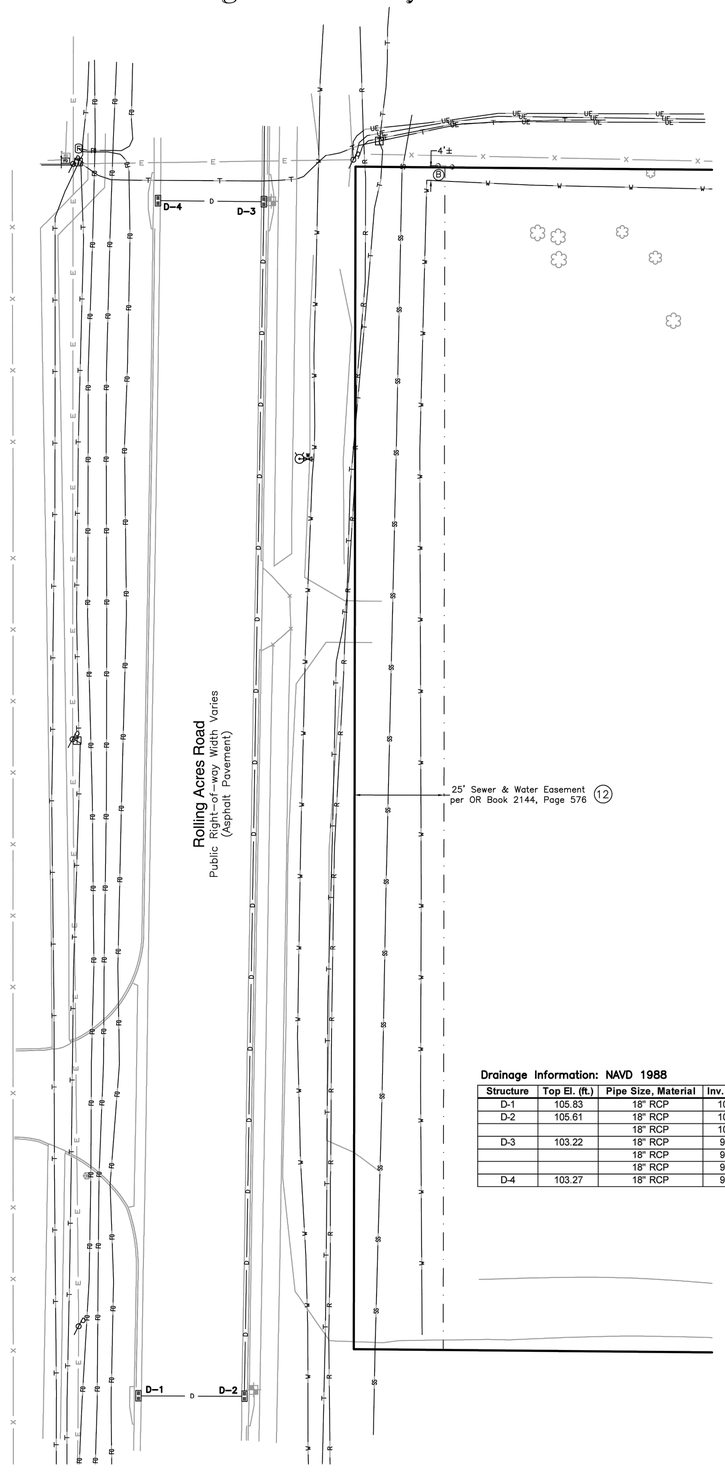

Drainage Information: NAVD 1988

Structure	Top El. (ft.)	Pipe Size, Material	Inv. El. (ft.)	Direction
D-1	105.83	18" RCP	100.88	East
D-2	105.61	18" RCP	100.61	West
		18" RCP	100.51	North
D-3	103.22	18" RCP	98.87	South
		18" RCP	98.87	West
		18" RCP	98.87	North
D-4	103.27	18" RCP	98.87	East

Topographic Detail Sheet

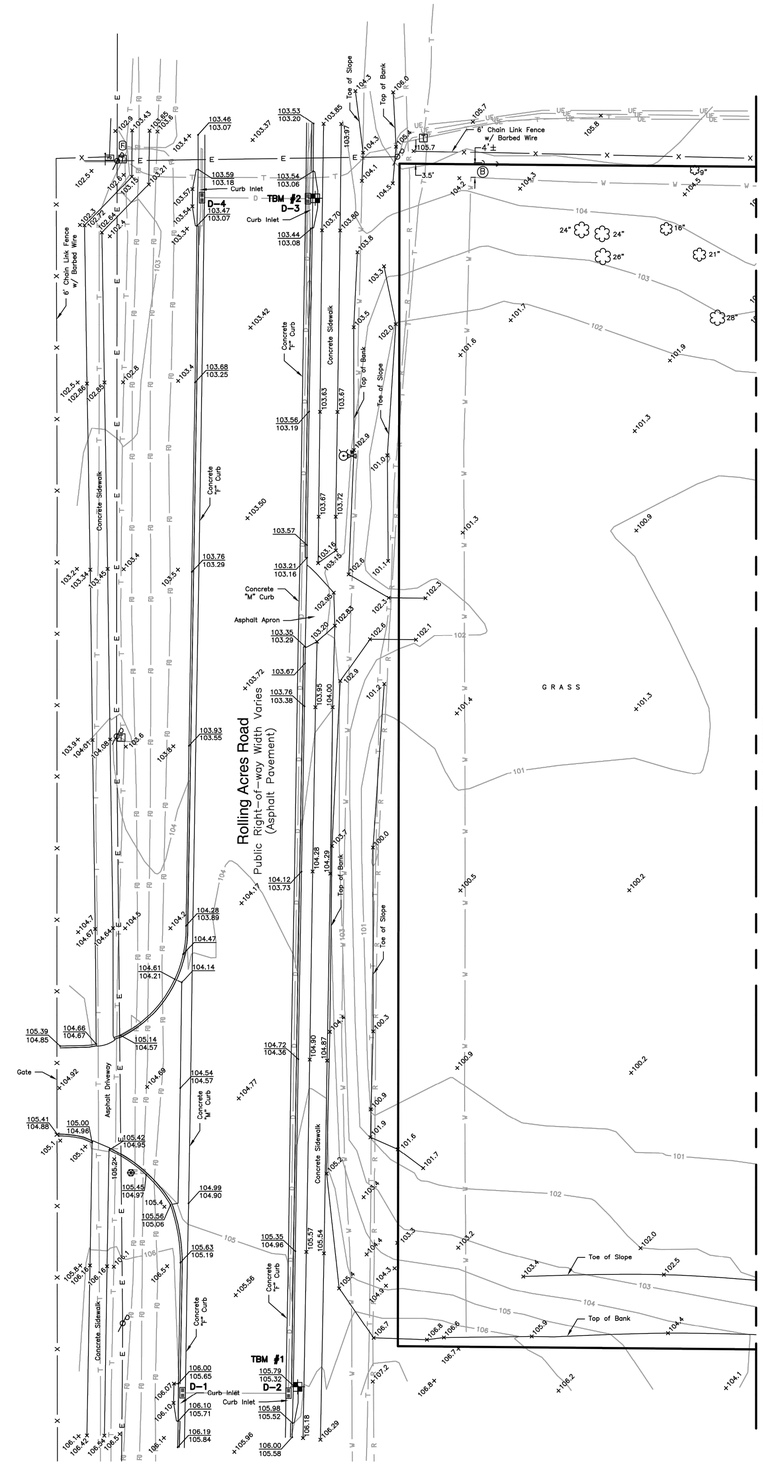

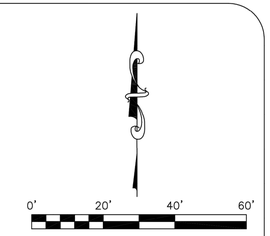

Benchmark Information: NAVD 1988

TBM #1
Elevation = 105.98'
Set box cut in northeast corner of concrete drainage structure D-2 located on the east side of Rolling Acres Road at the southwest corner of subject property.

TBM #2
Elevation = 103.70'
Set box cut in centerline of concrete drainage structure D-3 located on the east side of Rolling Acres Road at the northwest corner of subject property, 25'± southwest of power pole #132655.

C1.1

EXISTING CONDITIONS

ALTA/ACSM Land Title Survey

Lady Lake

SURVTECH SOLUTIONS, INC.
10220 U.S. Highway 92 East
Tampa, FL 33610
Licensed Business #7340
phone: (813)-621-4929
fax: (813)-621-7194
email: tmcclintic@survtechsolutions.com
http://www.survtechsolutions.com

Topographic Detail Sheet

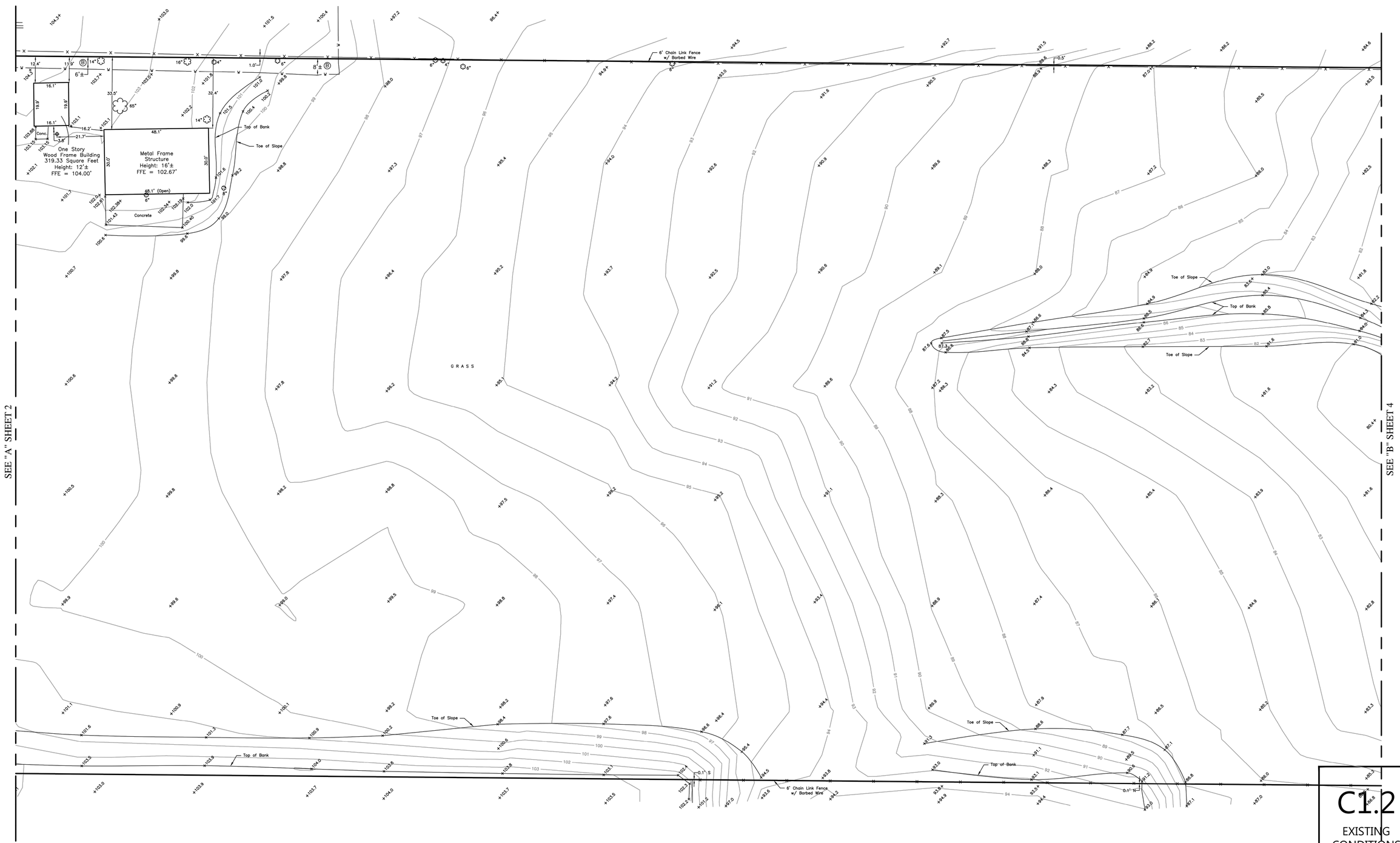

C1.2

EXISTING CONDITIONS

ALTA/ACSM Land Title Survey

Lady Lake

SURVTECH SOLUTIONS, INC.
10220 U.S. Highway 92 East
Tampa, FL 33610
Licensed Business #7340
phone: (813)-621-4929
fax: (813)-621-7194
email: tmcclintic@survtechsolutions.com
http://www.survtechsolutions.com

Drawing Name: 20150368_1B

Topographic Detail Sheet

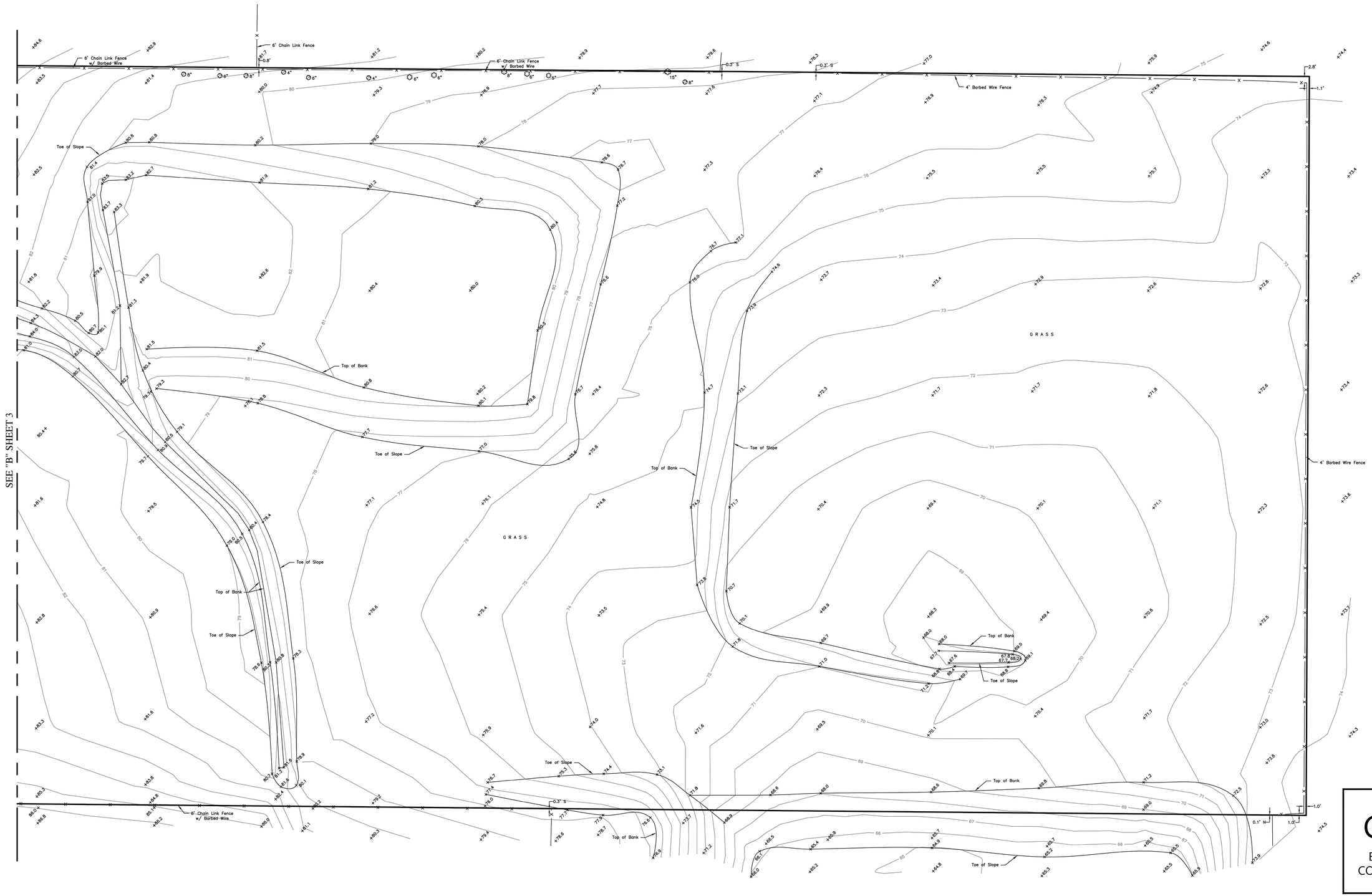

C1.3

EXISTING CONDITIONS

ALTA/ACSM Land Title Survey

Lady Lake

SURVTECH SOLUTIONS, INC.
10220 U.S. Highway 92 East
Tampa, FL 33610
Licensed Business #7340
phone: (813)-621-4929
fax: (813)-621-7194
email: tmcclintic@survtechsolutions.com
http://www.survtechsolutions.com

Drawing Name: 20150368_1T

ROUTE SURVEY
FOR
ROLLING ACRES ROAD, LADY LAKE, FLORIDA

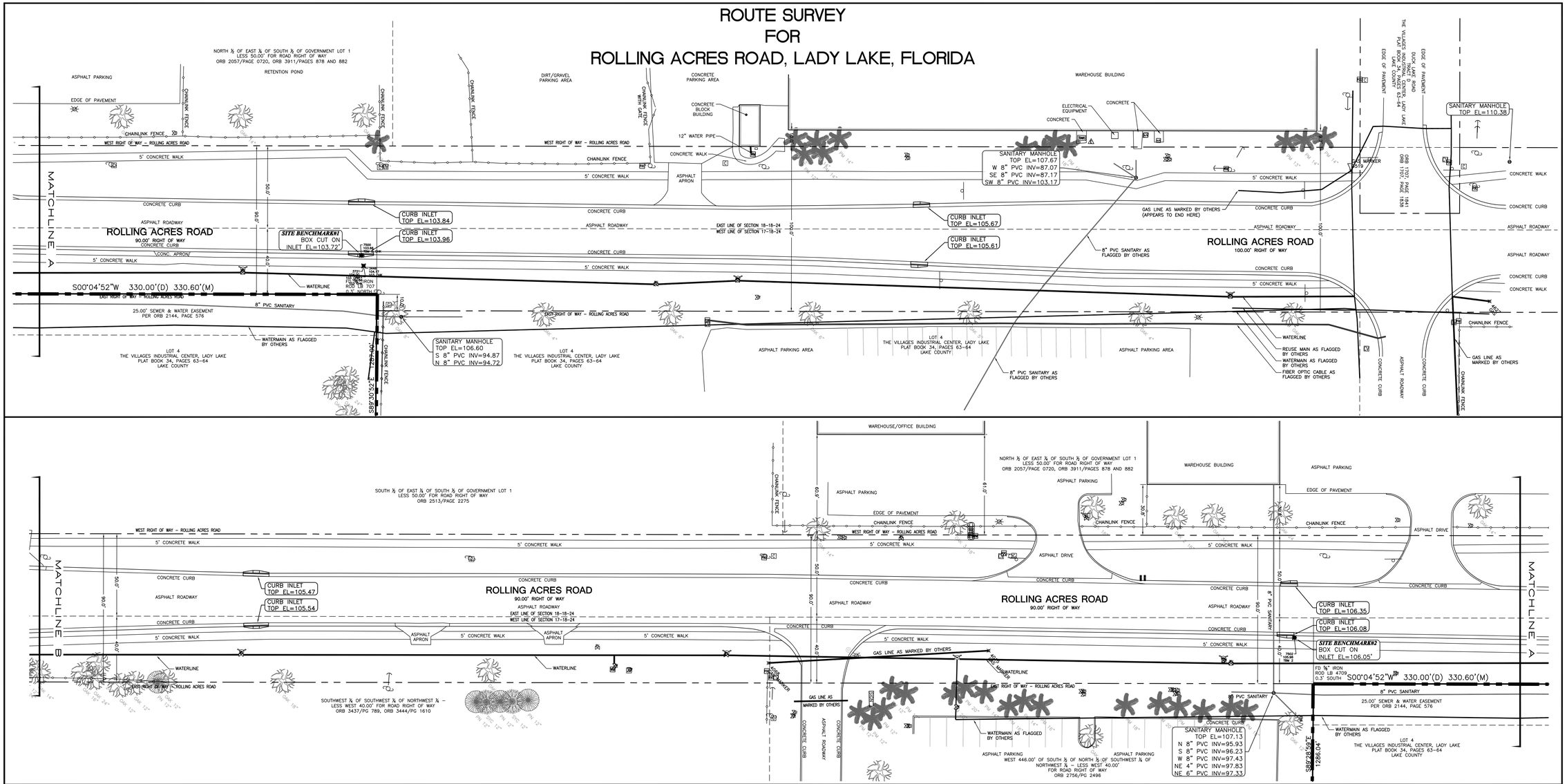

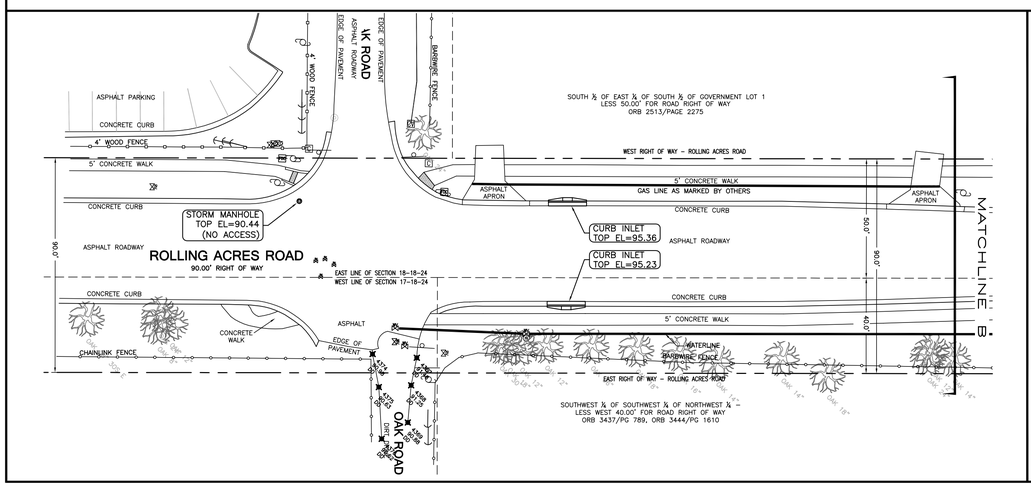

LEGAL DESCRIPTIONS:

ROLLING ACRES ROAD RIGHT OF WAY SURVEY IN LADY LAKE, LAKE COUNTY, FLORIDA.

SURVEY NOTES:

- LANDS SHOWN HEREON WERE NOT ABSTRACTED FOR EASEMENTS, RIGHTS–OF–WAY OR ADJOINERS OF RECORD
- UNDERGROUND UTILITIES, FOUNDATIONS OR OTHER STRUCTURES WERE NOT LOCATED BY THIS SURVEY.
- CONTRACTOR IS TO VERIFY THE LOCATION AND SIZE OF ALL UTILITIES PRIOR TO CONSTRUCTION.

SYMBOLS

- LIGHT POLE
- ELECTRIC RISER
- ELECTRIC METER
- TRANSFORMER
- CABLE/PHONE (COMMUNICATIONS) RISER
- CABLE/PHONE (COMMUNICATIONS) VAULT
- IRRIGATION CONTROL VALVE
- IRRIGATION (REUSE) GATE VALVE
- BACKFLOW PREVENTER
- WATER VALVE
- WATER METER
- FIRE HYDRANT
- FIRE DEPT. CONNECTION
- POST INDICATOR VALVE
- GAS VALVE
- SANITARY MANHOLE
- CLEAN OUT
- PALM
- PINE
- OAK
- MAGNOLIA

ABBREVIATIONS

A – ARC
AC – ACRES
A/C – AIR CONDITIONER
BM – BENCH MARK
BK – BOOK
(C) – CALCULATED MEASUREMENT
C – CHORD
CB – CHORD BEARING
C/L – CENTERLINE
CONC – CONCRETE
CBS – CONCRETE BLOCK STRUCTURE
CMP – CORRUGATED METAL PIPE
CR – COUNTY ROAD
DB – DEED BOOK
Δ – DELTA OR CENTRAL ANGLE
DE – DRAINAGE EASEMENT
DUE – DRAINAGE & UTILITY EASEMENT
EL – ELEVATION
ESMT – EASEMENT
GPS – GLOBAL POSITIONING SYSTEM
(M) – FIELD MEASUREMENT
(D) – DESCRIBED (DEED)
FF – FINISHED FLOOR ELEVATION
FD – FOUND
HC – HANDICAP
HDPE– HIGH DENSITY POLYETHYLENE PIPE
ID – IDENTIFICATION
LB – LICENSED BUSINESS
MES – MITERED END SECTION
NTS – NOT TO SCALE
OHE – OVERHEAD ELECTRIC LINES
OR – OFFICIAL RECORDS
PG – PAGE
PB – PLAT BOOK
(P) – PLAT
POB – POINT OF BEGINNING
POC – POINT OF COMMENCEMENT
PC – POINT OF CURVATURE
PI – POINT OF INTERSECTION
PRC – POINT OF REVERSE CURVE
PT – POINT OF TANGENT
PVC – POLYVINYL CHLORIDE PIPE
PSM – PROFESSIONAL SURVEYOR & MAPPER
R – RADIUS
RNG – RANGE
RLS – REGISTERED LAND SURVEYOR
RCP – REINFORCED CONCRETE PIPE
R/W – RIGHT OF WAY
SEC – SECTION
SR – STATE ROAD
SW – SIDEWALK
TWP – TOWNSHIP
UE – UTILITY EASEMENT
NAVD – NORTH AMERICAN VERTICAL DATUM
NGVD – NATIONAL GEODETIC VERTICAL DATUM
ALTA/ACSM – AMERICAN LAND TITLE ASSOCIATION/
AMERICAN CONGRESS SURVEYING AND MAPPING

W S N E

0 30' 60'
GRAPHIC SCALE
IN FEET
1 INCH = 30 FEET

VERTICAL DATUM: NAVD 1988

I HEREBY CERTIFY THAT THE MAP OF SURVEY SHOWN HEREON IS IN ACCORDANCE WITH THE STANDARDS OF PRACTICE AS SET FORTH BY THE BOARD OF PROFESSIONAL LAND SURVEYORS IN CHAPTER 5J–17, FLORIDA ADMINISTRATIVE CODE, PURSUANT TO SECTION 472.027, FLORIDA STATUTES.

DONALD G. MILLER, LICENSE, STATE OF FLORIDA

DONALD G. MILLER, P.S.M. 6674

FLORIDA REGISTERED LAND SURVEYOR AND MAPPER. NOT VALID WITHOUT THE SIGNATURE & THE ORIGINAL RAISED SEAL OF A FLORIDA LICENSED SURVEYOR AND MAPPER.

Littlejohn
An S&ME Company
1615 Edgewater Drive, Suite 200, ORLANDO, FLORIDA 32804
T: 407.422.7112 F: 407.422.7243

ROUTE SURVEY
ROLLING ACRES ROAD
LADY LAKE - LAKE COUNTY, FLORIDA

DATE	REVISIONS
3-18-16	ADDED TOPO FROM SURVEY DATED 3/1/
2/23/16	JOB #2C

S1.0
ROUTE SURVEY

G:\Projects\2015\20150902\dwg\Survey\Lady Lake-Rolling Acres Rd topo.dwg-SHEET 24x36 May 03, 2016 - 10:07am CGrammier

EROSION CONTROL NOTES:

1. EROSION PREVENTION AND SEDIMENT CONTROL MEASURES MUST BE IN PLACE AND FUNCTIONAL BEFORE EARTH MOVING OPERATION BEGINS AND MUST BE CONSTRUCTED AND MAINTAINED THROUGHOUT THE CONSTRUCTION PERIOD. TEMPORARY MEASURES MAY BE REMOVED AT THE BEGINNING OF THE WORKDAY BUT MUST BE REPLACED AT THE END OF THE WORKDAY.
2. THE FOLLOWING RECORDS SHALL BE MAINTAINED ON OR NEAR SITE: THE DATES WHEN MAJOR GRADING ACTIVITIES OCCUR; THE DATES WHEN CONSTRUCTION ACTIVITIES TEMPORARILY OR PERMANENTLY CEASE ON A PORTION OF THE SITE; THE DATES WHEN STABILIZATION MEASURES ARE INITIATED; INSPECTION RECORDS AND RAINFALL RECORDS.
3. THE CONTRACTOR SHALL MAINTAIN A RAIN GAUGE AND DAILY RAINFALL RECORDS AT THE SITE OR USE A REFERENCE SITE FOR A RECORD OF DAILY AMOUNT OF PRECIPITATION.
4. PRE-CONSTRUCTION VEGETATIVE GROUND COVER SHALL NOT BE DESTROYED, REMOVED OR DISTURBED MORE THAN 10 DAYS PRIOR TO GRADING OR EARTH MOVING UNLESS THE AREA IS SEEDED AND/OR MULCHED OR OTHER TEMPORARY COVER IS INSTALLED.
5. CONSTRUCTION MUST BE SEQUENCED TO MINIMIZE THE EXPOSURE TIME OF GRADED OR DENUDED AREAS.
6. SEDIMENT SHOULD BE REMOVED FROM SEDIMENT TRAPS, SILT FENCES, SEDIMENTATION PONDS AND OTHER SEDIMENT CONTROLS AS NECESSARY AND MUST BE REMOVED WHEN DESIGN CAPACITY HAS BEEN REDUCED BY 50% OR AS DIRECTED BY OWNERS REPRESENTATIVE.
7. THE CONTRACTOR SHALL REMOVE SEDIMENT FROM ALL DRAINAGE STRUCTURES BEFORE ACCEPTANCE BY LOCAL GOVERNING AGENCY OR AS DIRECTED BY THE OWNER'S REPRESENTATIVE.
8. THE CONTRACTOR SHALL REMOVE THE TEMPORARY EROSION AND WATER POLLUTION CONTROL DEVICES ONLY AFTER A SOLID STAND OF GRASS HAS BEEN ESTABLISHED ON GRADED AREAS AND WHEN IN THE OPINION OF THE OWNER'S REPRESENTATIVE, THEY ARE NO LONGER NEEDED.

DEMOLITION NOTES

1. ALL MATERIALS BEING REMOVED AND NOT RELOCATED UNDER THE NEW CONSTRUCTION, INCLUDING TREES AND SHRUBS, SIGNS, UTILITY STRUCTURES, ETC., SHALL BE FIRST OFFERED TO THE OWNER'S REPRESENTATIVE AND IF NOT ACCEPTED SHALL THEN BE PROPERLY DISPOSED OF BY THE CONTRACTOR.
2. THE CONTRACTOR IS RESPONSIBLE FOR LOCATING ALL CHARTED AND UNCHARTED UTILITIES. TAKE CARE TO PROTECT UTILITIES THAT ARE TO REMAIN. REPAIR ANY DAMAGE ACCORDING TO LOCAL STANDARDS AND AT THE CONTRACTOR'S EXPENSE. COORDINATE ALL CONSTRUCTION WITH THE APPROPRIATE UTILITY COMPANY.
3. THE CONTRACTOR SHALL VERIFY THE LIMITS OF DEMOLITION WITH THE OWNER'S REPRESENTATIVE PRIOR TO COMMENCEMENT OF WORK.
4. IN AREAS WHERE EXISTING PAVEMENT, WALKS, OR CURBS ARE TO BE REMOVED, SAW CUT TO PROVIDE A CLEAN EDGE. COORDINATE EXTENT OF PAVEMENT DEMOLITION WITH THE LIMIT OF NEW IMPROVEMENTS ON THE SITE LAYOUT PLAN & UTILITY INSTALLATION.
5. CONTRACTOR SHALL COORDINATE PHASING OF THE DEMOLITION WITH THE OWNER'S REPRESENTATIVE AND LOCAL GOVERNING AGENCY PRIOR TO BEGINNING WORK. DISRUPTION OF EXISTING UTILITY SERVICES AND TRAFFIC PATTERNS SHALL BE MINIMIZED TO THE EXTENT POSSIBLE AND INITIATED ONLY AFTER APPROVAL BY THE LOCAL GOVERNING AGENCY AND THE UTILITY COMPANIES.
6. CAVITIES LEFT BY STRUCTURE REMOVAL SHALL BE SUITABLY BACKFILLED AND COMPACTED IN ACCORDANCE WITH THESE PLANS AND SPECIFICATIONS.
7. THE CONTRACTOR SHALL USE WATER SPRINKLING AND OTHER SUITABLE METHODS AS NECESSARY TO CONTROL DUST AND DIRT CAUSED BY THE DEMOLITION WORK.
8. THE CONTRACTOR IS RESPONSIBLE FOR ALL DEMOLITION AND REMOVAL NECESSARY TO ACCOMPLISH THE PROPOSED IMPROVEMENTS SHOWN ON THESE PLANS.
9. THE CONTRACTOR SHALL PRESERVE AND PROTECT SURVEY CONTROL POINTS AND SHALL BE RESPONSIBLE FOR REPLACEMENT OF ANY DISTURBED CONTROL POINTS.
10. EXISTING LIGHT STANDARDS BEING REMOVED SHALL BE FIRST OFFERED TO THE OWNER PRIOR TO DISPOSING OF THEM. COORDINATE LIGHTING DEMOLITION AND LAYOUT WITH THE ELECTRICAL DRAWINGS.
11. RELOCATION OF EXISTING PLANT MATERIALS SHALL BE COORDINATED WITH THE OWNER AND RELOCATED TO A DESIGNATED AREA ON SITE.
12. EXISTING TRESS TO BE PRESERVED ARE TO BE BARRICADED BEFORE BEGINNING CONSTRUCTION IN ACCORDANCE WITH THE TREE PRESERVATION NOTES AND DETAIL ON THE LANDSCAPE PLAN.
13. NO UTILITY OR STORM SEWER LINES SHALL BE DEMOLISHED UNTIL THE NEW LINES HAVE BEEN INSTALLED AND ARE PLACED INTO OPERATION.
14. THE CONTRACTOR SHALL INCORPORATE INTO HIS WORK ANY ISOLATION VALVES OR TEMPORARY PLUGS REQUIRED TO CONSTRUCT NEW UTILITY LINES AND DEMOLISH EXISTING UTILITY LINES.
15. SELECTIVE CLEARING CONSISTING OF REMOVAL OF VINES, SAPLINGS UNDER 1” DIAMETER AND UNDERBRUSH SHALL BE PERFORMED IN TREE PRESERVATION AREAS INTERNAL TO THE PROJECT AND NOTED ON PLANS.
16. WHERE WATER LINE AND SEWER LINE ABANDONMENT IS PLANNED, THE CONTRACTOR MAY ABANDON WATER LINES AND SEWER LINES IN PLACE WHERE THEY OCCUR AT LEAST 24” (TO TOP OF PIPE) BELOW FINAL SUBGRADE ELEVATIONS AND OUTSIDE THE BUILDING FOOT PRINT. ALL UTILITY LINES BEING ABANDONED IN PLACE SHALL HAVE ALL ENDS PERMANENTLY CLOSED USING A CONCRETE PLUG.
17. WHERE EXISTING IRRIGATION LINED LIE WITHIN THE AREA AFFECTED BY THE PROPOSED CONSTRUCTION, THE CONTRACTOR SHALL REWORK THE EXISTING IRRIGATION SYSTEMS IN ACCORDANCE WITH DIRECTIVES NOTED ON THE LANDSCAPE PLAN. SERVICE SHALL BE MAINTAINED DURING CONSTRUCTION TO THE LANDSCAPED AREAS CURRENTLY IRRIGATED.

GENERAL NOTES

1. THE PROJECT SITE IS SHOWN AS PARCEL 17-18-24-000200001100.
2. BASE INFORMATION WAS TAKEN FROM A SURVEY PREPARED BY SURVTECH SOLUTIONS, INC. DATED 9/29/15. LITTLEJOHN ENGINEERING ASSOCIATES AND ANY OF THEIR CONSULTANTS SHALL NOT BE HELD RESPONSIBLE FOR THE ACCURACY AND/OR COMPLETENESS OF THAT INFORMATION SHOWN HEREON OR ANY ERRORS OR OMISSIONS RESULTING FROM SUCH.
3. THE SITE LAYOUT IS BASED ON REFERENCE POINTS AS NOTED.
4. THE CONTRACTOR SHALL CHECK ALL EXISTING CONDITIONS, (i.e. INVERTS, UTILITY ROUTINGS, UTILITY CROSSINGS, AND DIMENSIONS) IN THE FIELD PRIOR TO COMMENCEMENT OF WORK. REPORT ANY DISCREPANCIES TO THE ENGINEER.
5. THE CONTRACTOR SHALL VERIFY THE EXACT LOCATION OF ALL EXISTING UTILITIES. TAKE CARE TO PROTECT UTILITIES THAT ARE TO REMAIN. REPAIR ANY DAMAGE ACCORDING TO LOCAL STANDARDS AND AT THE CONTRACTOR'S EXPENSE. COORDINATE ALL CONSTRUCTION WITH THE APPROPRIATE UTILITY COMPANY. THE CONTRACTOR SHALL CALL NATIONAL ONE CALL (811) 72 HOURS PRIOR TO PROCEEDING WITH ANY EXCAVATION.
6. THE CONTRACTOR SHALL CONFORM TO ALL LOCAL CODES AND RECEIVE APPROVAL WHERE NECESSARY BEFORE CONSTRUCTION.
7. EXISTING PAVEMENT OF PUBLIC ROADWAYS SHALL BE PATCHED IN ACCORDANCE WITH LOCAL AGENCY STANDARDS WHEREVER UTILITY INSTALLATION REQUIRES REMOVAL OF THE EXISTING PAVEMENT. COORDINATE PAVEMENT TRENCHING LOCATIONS WITH SITE CIVIL, PLUMBING AND ELECTRICAL PLANS.
8. PROVIDE A SMOOTH TRANSITION BETWEEN EXISTING PAVEMENT AND NEW PAVEMENT. SLIGHT FIELD ADJUSTMENT OF FINAL GRADES MAY BE NECESSARY.

GENERAL NOTES (CONT.)

9. DIMENSIONS ARE TO FACE OF CURB AND/OR EXTERIOR FACE OF BUILDING UNLESS OTHERWISE NOTED.
10. CONCRETE FOR CURBS AND SIDEWALKS SHALL BE 3500 PSI CONCRETE.
11. ANY WORK UNACCEPTABLE TO THE OWNER'S REPRESENTATIVE OR TO THE LOCAL GOVERNING AUTHORITY SHALL BE REPAIRED OR REPLACED BY THE CONTRACTOR AT NO ADDITIONAL EXPENSE TO THE OWNER.
12. ACCESSIBLE RAMPS SHALL HAVE A MAXIMUM SLOPE OF 1:12. GRADES WITHIN ACCESSIBLE SPACES SHALL BE MAXIMUM 2% IN ALL DIRECTIONS.
13. THE PROPOSED BUILDING SHALL BE LAID OUT UTILIZING THE EXISTING STRUCTURE AS A CONTROL POINT AND THE ARCHITECTURAL DRAWINGS. DIMENSIONS SHOWN TO THE PROPOSED BUILDING ARE CALCULATED TO THE FACE OF EXTERIOR WALL. SEE ARCHITECTURAL PLANS FOR EXACT BUILDING DIMENSIONS.
14. CURBS SHALL BE PARALLEL TO THE CENTERLINE OF DRIVES. THE CURB SHALL BE PLACED ONLY AFTER HAVING ALL BREAK POINTS (PC & PT OF CURVES) LOCATED AT THE FACE OF CURB OR AT A CONSISTENT OFFSET BY A REGISTERED LAND SURVEYOR.
15. THE CONTRACTOR SHALL COMPLY WITH ALL PERTINENT PROVISIONS OF THE MANUAL OF ACCIDENT PREVENTION AND CONSTRUCTION ISSUED BY AGC OF AMERICA, INC. AND THE SAFETY AND HEALTH REGULATIONS OF CONSTRUCTION ISSUED BY THE U.S. DEPARTMENT OF LABOR.
16. THE CONTRACTOR SHALL PAVE IN THE DIRECTION OF TRAFFIC.
17. THE CONTRACTOR SHALL COLD PLANE IN THE DIRECTION OF TRAFFIC.
18. THE CONTRACTOR WILL BE REQUIRED TO ADJUST GRADES OF INTERSECTING STREETS, ALLEYS, PUBLIC ENTRANCES AND PRIVATE DRIVES AS DIRECTED BY THE ENGINEER.
19. ALL ROADWAY AND SIDEWALK CONSTRUCTION SHALL CONFORM TO THE REQUIREMENTS AND SPECIFICATIONS OF LOCAL GOVERNING AGENCY.
20. ALL CONSTRUCTION MATERIALS AND INSTALLATION SHALL CONFORM TO LOCAL GOVERNING AGENCY AND STATE DOT REGULATIONS AND SPECIFICATIONS.
21. ALL CURBING WILL BE REQUIRED TO ADJUST TO THE GRADES OF INTERSECTING STREETS, ALLEYS, PUBLIC ENTRANCES, AND PRIVATE DRIVES AS DIRECTED BY THE ENGINEER.
22. THE CONTRACTOR SHALL COMPLY WITH ALL PERTINENT PROVISIONS OF THE MANUAL OF ACCIDENT PREVENTION AND CONSTRUCTION ISSUED BY AGC OF AMERICA, INC. AND THE SAFETY AND HEALTH REGULATIONS OF CONSTRUCTION ISSUED BY THE U.S. DEPARTMENT OF LABOR.

TREE PROTECTION NOTES

1. PRIOR TO CONSTRUCTION ACTIVITY, THE GENERAL CONTRACTOR SHALL STAKE THE LIMITS OF CLEARING, GRADING AND BUILDING FOOTPRINTS THAT AFFECT THE TREE PRESERVATION AREAS.
2. THE LOCATION OF TREE PROTECTION MEASURES SHALL BE REVIEWED AND APPROVED BY OWNER'S REPRESENTATIVE PRIOR TO CONSTRUCTION COMMENCING. TREE PROTECTION BARRICADES SHALL CONSIST OF ORANGE PLASTIC BARRIER CONSTRUCTION FENCING, AND SHALL BE INSTALLED IN LOCATIONS AS DIRECTED BY THE OWNER'S REPRESENTATIVE.
3. CONTRACTOR SHALL INSTALL ADEQUATE TREE PROTECTION MEASURES PRIOR TO ANY GRADING ACTIVITIES TO PREVENT CONSTRUCTION ACTIVITIES WITHIN PROXIMITY OF SPECIMEN TREES.
4. ALL GRADING WITHIN PROTECTED-ROOT-ZONE AREAS SHALL BE DONE BY HAND OR WITH SMALL EQUIPMENT TO MINIMIZE ROOT DAMAGE.
5. ROOTS EXPOSED BY CONSTRUCTION ACTIVITY SHALL BE PRUNED FLUSH WITH THE GROUND AND COVERED WITH BACKFILL AS SOON AS POSSIBLE. IF EXPOSED ROOTS ARE NOT COVERED WITHIN 24 HOURS, COVER THEM WITH MULCH AND THOROUGHLY WATER UNTIL COVERED WITH BACKFILL.
6. DO NOT OPERATE OR STORE HEAVY EQUIPMENT, NOR HANDLE OR STORE MATERIALS, WITHIN THE DRIP LINES OF TREES TO BE PRESERVED.
7. WHENEVER GRADING OR EXCAVATION IS DIRECTED WITHIN THE CANOPY COVERAGE AREA OF A TREE TO BE PRESERVED, FIRST CUT ROOTS USING A “DITCH WITCH” OR SIMILAR DEVICE TO PROVIDE CLEAN CUT OF ROOTS AT LIMITS OF ACTIVITY (PRIOR TO USE OF BACKHOE OR BULLDOZER). DO NOT ALLOW HEAVY EQUIPMENT WITHIN THE AREA BETWEEN CUT LINE AND TRUNK OF TREE. TRENCHES TO BE BACKFILLED AND TAMPERED TO MINIMIZE SETTLEMENT.
8. BARRICADES SHALL ENCROACH ON AREAS TO BE PAVED UNTIL PAVING AND/OR GRADE ADJUSTMENT ACTIVITIES BEGIN. ONLY THEN SHALL BARRICADES BE MOVED TO THE MAXIMUM ALLOWABLE PROTECTED ROOT TREE SAVE ZONE THAT WILL NOT ENCROACH ON THE PLANNED CONSTRUCTION. REMOVAL OF BARRICADE SHALL OCCUR ONLY AFTER PAVING IS COMPLETED AND CURBING IS INSTALLED, OR AS DIRECTED BY THE OWNER'S REPRESENTATIVE.
9. PROVIDE WATERING OF SPECIMEN TREES DURING CONSTRUCTION WHEN PERIODS OF DROUGHT EXCEED SEVEN DAYS. UTILIZE OSCILLATING TYPE SPRINKLERS TO COVER ENTIRE PROTECTED ROOT ZONE FOR FOUR HOURS EACH.
10. ROOT AREA OF TREES WHERE SOIL HAS BEEN COMPACTED DUE TO CONSTRUCTION ACTIVITY SHALL BE VERTICALLY MULCHED (AERATED) AT DIRECTION OF THE QUALIFIED PROFESSIONAL. THIS SHALL BE ACCOMPLISHED BY AUGURING THE SOIL IN A 2' GRID PATTERN TO WITHIN 3' OF TRUNK AND TO 10' BEYOND THE DRIP LINE. A 2” TO 3” HAND OPERATED AUGUR SHALL BE USED TO DRILL HOLES TO A MINIMUM DEPTH OF 12”. TYPE OF BACKFILL WILL BE DETERMINED BY THE QUALIFIED PROFESSIONAL.
11. HEAVY ACCUMULATION OF DUST FROM CONSTRUCTION ACTIVITY MAY OCCUR ON THE SURFACE OF TREE FOLIAGE. TO CONTROL DUST, TREE FOLIAGE MAY BE HOSED DOWN UPON THE REQUEST OF THE QUALIFIED PROFESSIONAL
12. REMOVAL OF ALL TREE PROTECTION FENCING, SILT FENCING AND SIGNAGE WILL BE DONE BY THE GENERAL CONTRACTOR WHEN PERMITTED BY THE LOCAL CODE ENFORCEMENT OFFICIALS. RESTORATION OF ALL AREAS DISTURBED BY THE FENCING AND/OR SIGNAGE WILL BE THE GENERAL CONTRACTOR'S RESPONSIBILITY.

SITE GRADING & EROSION CONTROL NOTES

1. THE DISTURBED AREA FOR THIS PROJECT IS APPROXIMATELY 5.4 ACRES.
2. THE SUBJECT PROPERTY DOES NOT LIE WITHIN A SPECIAL FLOOD HAZARD ZONE ACCORDING TO COMMUNITY PANEL NO. 170 OF THE F.E.M.A. FLOOD INSURANCE RATE MAPS FOR LAKE COUNTY, FLORIDA, WITH AN EFFECTIVE DATE OF DECEMBER 18, 2012.
3. CONSTRUCT SILT BARRIERS BEFORE BEGINNING GRADING OPERATIONS.
4. MULCH AND SEED ALL DISTURBED AREAS AS SOON AS POSSIBLE AFTER FINAL GRADING IS COMPLETED, UNLESS OTHERWISE INDICATED. CONTRACTOR SHALL TAKE WHATEVER MEANS NECESSARY TO ESTABLISH PERMANENT SOIL STABILIZATION.
5. THE CONTRACTOR SHALL VERIFY THE EXACT LOCATION OF ALL EXISTING UTILITIES. TAKE CARE TO PROTECT UTILITIES THAT ARE TO REMAIN. REPAIR ANY DAMAGE ACCORDING TO LOCAL STANDARDS AND AT THE CONTRACTOR'S EXPENSE. COORDINATE ALL CONSTRUCTION WITH THE APPROPRIATE UTILITY COMPANY.
6. PROVIDE TEMPORARY CONSTRUCTION ACCESS(ES) AT THE POINT(S) WHERE CONSTRUCTION VEHICLES EXIT THE CONSTRUCTION AREA. MAINTAIN PUBLIC ROADWAYS FREE OF TRACKED MUD AND DIRT.
7. THE CONTRACTOR SHALL COORDINATE THE EXACT LOCATION OF THE STORM DRAIN CONNECTIONS AT THE BUILDING WITH THE PLUMBING PLANS.
8. THE CONTRACTOR SHALL CHECK ALL EXISTING GRADES AND DIMENSIONS IN THE FIELD PRIOR TO BEGINNING WORK AND REPORT ANY DISCREPANCIES TO THE ENGINEER.

SITE GRADING & EROSION CONTROL NOTES (CONT.)

9. THE CONTRACTOR SHALL ADJUST THE CASTINGS OF ALL NEW AND EXISTING STRUCTURES TO MATCH PROPOSED FINISH GRADES.
10. THE CONTRACTOR SHALL COMPLY WITH ALL PERTINENT PROVISIONS OF THE MANUAL OF ACCIDENT PREVENTION AND CONSTRUCTION ISSUED BY AGC OF AMERICA, INC. AND THE SAFETY AND HEALTH REGULATIONS OF CONSTRUCTION ISSUED BY THE U.S. DEPARTMENT OF LABOR.
11. PROPOSED CONTOUR LINES AND SPOT ELEVATIONS ARE THE RESULT OF AN ENGINEERED GRADING DESIGN AND REFLECT A PLANNED INTENT WITH REGARD TO DRAINAGE AND MOVEMENT OF MATERIALS. SHOULD THE CONTRACTOR HAVE ANY QUESTION OF THE INTENT OR ANY PROBLEM WITH THE CONTINUITY OF GRADES, THE ENGINEER SHALL BE CONTACTED IMMEDIATELY.
12. ALL CUT AND FILL SLOPES SHALL BE 3 HORIZONTAL TO 1 VERTICAL OR FLATTER UNLESS OTHERWISE INDICATED ON THE PLANS.
13. ALL PIPES UNDER EXISTING PAVED AREAS SHALL BE BACKFILLED TO THE TOP OF SUBGRADE WITH CRUSHED STONE.
14. MINIMUM GRADE ON ASPHALT OR CONCRETE PAVING SHALL BE 1.0%. THE MAXIMUM GRADES WITHIN ACCESSIBLE SPACES SHALL BE 2% IN ANY DIRECTION.
15. CONTRACTOR SHALL CONFORM TO ALL APPLICABLE CODES AND OBTAIN APPROVAL AS NECESSARY BEFORE BEGINNING CONSTRUCTION.
16. ALL EARTHWORK, INCLUDING THE EXCAVATED SUBGRADE AND EACH LAYER OF FILL, SHALL BE MONITORED AND APPROVED BY A QUALIFIED GEOTECHNICAL ENGINEER, OR HIS REPRESENTATIVE.
17. IF ANY SPRINGS OR UNDERGROUND STREAMS ARE EXPOSED DURING CONSTRUCTION PERMANENT FRENCH DRAINS MAY BE REQUIRED. THE DRAINS SHALL BE SPECIFIED AND LOCATED DURING CONSTRUCTION AS REQUIRED BY THE CONDITIONS WHICH ARE ENCOUNTERED, AND SHALL BE APPROVED BY THE ENGINEER.
18. THIS GRADING & DRAINAGE PLAN IS NOT A DETERMINATION OR GUARANTEE OF THE SUITABILITY OF THE SUBSURFACE CONDITIONS FOR THE WORK INDICATED. A GEOTECHNICAL SOILS REPORT HAS BEEN PREPARED AND IS AVAILABLE FROM THE OWNER. DETERMINATION OF THE SUBSURFACE CONDITIONS FOR THE WORK INDICATED IS SOLELY THE RESPONSIBILITY OF THE CONTRACTOR.
19. THE CONTRACTOR SHALL TAKE SPECIAL CARE TO COMPACT FILL SUFFICIENTLY AROUND AND OVER ALL PIPES, STRUCTURES, VALVE STEMS, ETC., INSIDE THE PROPOSED PAVED AREAS TO AVOID SETTLEMENT. ANY SETTLEMENT DURING THE WARRANTY PERIOD SHALL BE RESTORED BY THE CONTRACTOR AT NO ADDITIONAL COST TO THE OWNER.
20. IN NO CASE SHALL SLOPE, HEIGHT, SLOPE INCLINATION, OR EXCAVATION DEPTH, INCLUDING TRENCH CONSTRUCTION, EXCEED THOSE SPECIFIED IN LOCAL, STATE AND FEDERAL REGULATIONS, SPECIFICALLY THE CURRENT OSHA HEALTH AND SAFETY STANDARDS FOR EXCAVATIONS (29 CRF PART 1926) SHALL BE FOLLOWED.
21. DO NOT DISTURB VEGETATION OR REMOVE TREES EXCEPT WHEN NECESSARY FOR GRADING PURPOSES.
22. STRIP TOPSOIL FROM ALL CUT AND FILL AREAS AND STOCKPILE UPON COMPLETION OF GENERAL GRADING OVER ALL DISTURBED AREAS, TO A MINIMUM DEPTH OF 6”. CONTRACTOR SHALL SUPPLY ADDITIONAL TOP SOIL IF INSUFFICIENT QUANTITIES EXIST ON SITE.
23. TOP OF GRATE ELEVATIONS AND LOCATION OF COORDINATES FOR DRAINAGE STRUCTURES SHALL BE AS SHOWN ON THE DETAIL, UNLESS NOTED OTHERWISE. THE GRATES SHALL SLOPE LONGITUDINALLY WITH THE PAVEMENT GRADES.
24. ALL DRAINAGE CONSTRUCTION MATERIALS AND INSTALLATION SHALL CONFORM TO THE REQUIREMENTS AND SPECIFICATIONS OF THE LOCAL GOVERNING AGENCY.
25. POSITIVE DRAINAGE SHALL BE ESTABLISHED AS THE FIRST ORDER OF WORK AND SHALL BE MAINTAINED AT ALL TIMES DURING AND AFTER CONSTRUCTION. SOIL SOFTENED BY PERCHED WATER IN FOUNDATION AND PAVEMENT AREAS MUST BE UNDERCUT AND REPLACED WITH SUITABLE FILL MATERIALS APPROVED BY THE GEOTECHNICAL ENGINEER. GROUNDWATER INFILTRATION INTO EXCAVATIONS SHOULD BE EXPECTED, AND THE WATER SHALL BE REMOVED USING GRAVITY DRAINAGE OR PUMPING.
26. REINFORCED CONCRETE STORM DRAINAGE PIPE SHALL BE CLASS III, WALL “B”. HDPE SHALL BE CORRUGATED, SMOOTH WALL N-12 PIPE WITH SOIL TIGHT JOINTS.
27. FILL SLOPES 3:1 AND GREATER SHALL BE PLACED AND COMPACTED 5' BEYOND PROPOSED LIMITS AND THEN EXCAVATED BACK TO THE PROPOSED LOCATION.
28. THE CONTRACTOR SHALL PROVIDE AN ASBUILT SURVEY STAMPED BY A LICENSED SURVEYOR IN THE STATE OF FLORIDA OF ALL PUBLIC STORM SYSTEMS, ONSITE DETENTION PONDS, AND WATER QUALITY MEASURES VERIFYING COMPLIANCE WITH DESIGN DOCUMENTS.
29. THE CONTRACTOR SHALL NOTIFY THE ENGINEER 72 HOURS PRIOR TO INSTALLATION OF THE WATER QUALITY DEVICES.
30. ALL FILL MATERIAL SHALL BE APPROVED BY THE GEOTECHNICAL ENGINEER PRIOR TO PLACEMENT. THIS MATERIAL SHALL BE PLACED IN LIFTS DIRECTED BY THE GEOTECHNICAL ENGINEER AND COMPACTED AS SPECIFIED BY THE GEOTECHNICAL ENGINEER.
31. THE LOCATION OF ALL DIVERSION SWALES AND DITCHES SHALL BE FIELD ADJUSTED TO AVOID TREES AS POSSIBLE. THE CONTRACTOR SHALL WALK THE ALIGNMENT OF THESE SWALES AND DITCHES IN THE FIELD TO VERIFY AVOIDANCE OF TREES.
32. SEDIMENT REMOVED FROM SEDIMENT CONTROL STRUCTURES IS TO BE PLACED AT A SITE APPROVED BY THE ENGINEER. IT SHALL BE TREATED IN A MANNER SO THAT THE AREA AROUND THE DISPOSAL SITE WILL NOT BE CONTAMINATED OR DAMAGED BY THE SEDIMENT IN THE RUN-OFF. COST FOR THIS TREATMENT IS TO BE INCLUDED IN PRICE BID FOR EARTHWORK. THE CONTRACTOR SHALL OBTAIN THE DISPOSAL SITE AS PART OF THIS WORK.
33. STOCKPILED TOPSOIL OR FILL MATERIAL IS TO BE TREATED SO THE SEDIMENT RUN-OFF WILL NOT CONTAMINATE SURROUNDING AREAS OR ENTER NEARBY STREAMS.
34. ANY SITE USED FOR DISPOSAL AND/OR STOCKPILE OF ANY MATERIAL SHALL BE PROPERLY PERMITTED FOR SUCH ACTIVITY. IT IS THE RESPONSIBILITY OF THE CONTRACTOR TO SEE THAT ALL REQUIRED PERMITS ARE SECURED FOR EACH PROPERTY UTILIZED. A COPY OF THE APPROVED PERMIT MUST BE PROVIDED TO THE INSPECTOR PRIOR TO COMMENCEMENT OF WORK ON ANY PROPERTY. FAILURE TO DO SO MAY RESULT IN THE CONTRACTOR REMOVING ANY ILLEGALLY PLACED MATERIAL AT HIS OWN EXPENSE.
35. IT SHALL BE THE CONTRACTOR'S RESPONSIBILITY TO WASTE EXCESS EARTH MATERIAL OFF SITE AT NO ADDITIONAL COST TO THE OWNER. THE CONTRACTOR SHALL FIRST OFFER THE EXCESS MATERIAL TO THE OWNER. IF NOT ACCEPTED BY THE OWNER, THE CONTRACTOR SHALL DISPOSE OF EARTH MATERIAL OFF SITE. IT SHALL ALSO BE THE CONTRACTOR'S RESPONSIBILITY TO IMPORT SUITABLE MATERIAL (AT NO ADDITIONAL COST TO THE OWNER) FOR EARTHWORK OPERATIONS IF SUFFICIENT AMOUNTS OF EARTH MATERIAL ARE NOT AVAILABLE ON SITE.
36. SEGMENTAL WALLS SHALL BE PROVIDED BY THE CONTRACTOR AS A DESIGN BUILD. WALL DESIGN PLANS STAMPED BY A REGISTERED ENGINEER IN THE STATE OF THE PROJECT SHALL BE SUBMITTED TO THE ENGINEER AS A SHOP DRAWING. THE CONTRACTOR IS RESPONSIBLE FOR OBTAINING ANY GEOTECHNICAL INFORMATION NECESSARY TO PROPERLY DESIGN THE WALL.

SITE UTILITY NOTES

1. THE PROJECT SITE IS SHOWN ON JURISDICTION, TAX MAP TAX MAP, AS PARCEL PARCEL NUM.
2. THE SANITARY SEWER SHALL BE OF THE MATERIAL INDICATED ON THE PLAN. POLYVINYLCHLORIDE (PVC) SHALL BE (SDR35). DUCTILE IRON PIPE (D.I.P.) SHALL BE CLASS 52.
3. ALL WATER LINES, SEWER LINES, AND APPURTENANCES SHALL BE OF MATERIALS AND CONSTRUCTION THAT CONFORM TO THE LOCAL AGENCY STANDARDS AND SPECIFICATIONS.
4. PROVIDE A MINIMUM ___” OF COVER OVER ALL WATER LINES.
5. THE CONTRACTOR SHALL MAINTAIN 10 FEET HORIZONTAL SEPARATION BETWEEN SANITARY SEWER LINES AND WATER LINES. WHERE THESE CRITERIA CANNOT BE MET, THE CONTRACTOR SHALL MAINTAIN 18” VERTICAL SEPARATION BETWEEN WATER AND SEWER LINES.
6. THE CONTRACTOR SHALL FIELD VERIFY THE EXACT HORIZONTAL AND VERTICAL LOCATION OF EXISTING MANHOLES OR SANITARY SEWER LINES AT THE POINT OF CONNECTION PRIOR TO THE COMMENCEMENT OF ORDERING OF MATERIALS, CONSTRUCTION OR REPORT ANY DISCREPANCIES TO THE ENGINEER IMMEDIATELY.
7. THE CONTRACTOR SHALL BE RESPONSIBLE FOR COORDINATING THE SEQUENCING OF CONSTRUCTION FOR ALL UTILITY LINES SO THAT WATER LINES DO NOT CONFLICT WITH SANITARY SEWERS, SANITARY SEWER SERVICES, STORM SEWERS, OR ANY OTHER UTILITY OR STRUCTURE, EXISTING OR PROPOSED.
8. THE LOCATION OF EXISTING UTILITIES SHOWN ON THESE PLANS ARE APPROXIMATE ONLY. THE CONTRACTOR SHALL NOTIFY EACH INDIVIDUAL UTILITY OWNER OF HIS PLAN OF OPERATION IN THE AREA OF THE UTILITIES. PRIOR TO COMMENCING WORK, THE CONTRACTOR SHALL CONTACT THE UTILITY OWNERS AND REQUEST THEM TO PROPERLY LOCATE THEIR RESPECTIVE UTILITY ON THE GROUND. THIS NOTIFICATION SHALL BE GIVEN AT LEAST THREE (3) BUSINESS DAYS PRIOR TO COMMENCEMENT OF OPERATIONS AROUND THE UTILITY.
9. BEFORE CONNECTIONS ARE MADE INTO EXISTING UTILITIES, THE NEW LINES ARE TO BE FLUSHED AND TESTED BY THE CONTRACTOR IN ACCORDANCE WITH THE LOCAL WATER AND SEWER DEPARTMENT SPECIFICATIONS.
10. ALL TRENCHES CUT IN EXISTING ROADS OR DRIVES SHALL UTILIZE A CLEAN SAW CUT AND SHALL BE BACKFIELD (100%) TO FINAL SUBGRADE WITH #57 STONE. REPAIR ROADS PER LOCAL AGENCY REQUIREMENTS.
11. REPAIR ALL DAMAGE TO EXISTING FEATURES (i.e. DRIVES, ROADS, YARDS, LANDSCAPING, ETC...) TO PRE-CONSTRUCTION CONDITION.
12. THE CONTRACTOR SHALL PROVIDE ALL HORIZONTAL AND VERTICAL BENDS TO ATTAIN THE ALIGNMENT INDICATED ON THE PLANS. PROVIDE VERTICAL BENDS WHERE NECESSARY TO ALLOW WATER LINES TO PASSUNDER OR OVER OTHER UTILITY LINES. (ALL BENDS AND BRACES NEEDED MAY NOT BE ACTUALLY SHOWN). PROVIDE BRACING AND/OR RODDING AT ALL BENDS AND TEES AS REQUIRED BY WATER DEPARTMENT.
13. REDUCED PRESSURE BACKFLOW PREVENTER (RPBP) OR DUAL CHECK WILL BE REQUIRED ON ALL TESTS AND FILL LINES (JUMPER) NEEDED FOR WATER MAIN CONSTRUCTION AND MUST BE APPROVED BY THE WATER DEPARTMENT.
14. COORDINATE THE EXACT LOCATION OF ALL UTILITIES ENTERING THE BUILDING WITH THE PLUMBING PLANS.
15. WATER METERS SHALL BE AT LEAST 22” BUT NO MORE THAN 26" FROM TOP OF METER TO PROPOSED FINISHED GRADE.
16. THE CONTRACTOR SHALL VERIFY REQUIRED PIPE LENGTHS. EXISTING PIPE MATERIAL AND SIZES AS SHOWN ON PLANS.
17. REPAIR EXISTING PAVEMENT, CURBS, WALKS, LANDSCAPING, ETC. THAT ARE DAMAGED BY CONSTRUCTION ACTIVITIES TO A LIKE NEW CONDITION AT NO ADDITIONAL COST TO THE OWNER.
18. THE PROPOSED GAS LINE CONSTRUCTION AND INSTALLATION SHALL BE COORDINATED WITH THE LOCAL GAS COMPANY BY THE CONTRACTOR.
19. THE PROPOSED ELECTRIC LINE CONSTRUCTION AND INSTALLATION SHALL BE COORDINATED WITH THE LOCAL ELECTRIC COMPANY BY THE CONTRACTOR.
20. THE PROPOSED TELEPHONE LINE CONSTRUCTION AND INSTALLATION SHALL BE COORDINATED WITH THE LOCAL TELEPHONE COMPANY BY THE CONTRACTOR.
21. WHERE DRAINAGE OR UTILITY LINES OCCUR IN PROPOSED FILL AREAS, THE FILL MATERIAL IS TO BE PLACED AND COMPACTED TO 98% OF MAXIMUM DRY DENSITY ACCORDING TO ASTM D698/D1557 PRIOR TO INSTALLATION OF DRAINAGE OR UTILITY LINES. FILL IS TO BE INSPECTED BY A PROFESSIONAL GEOTECHNICAL ENGINEER TESTING FIRM EMPLOYED BY THE OWNER. RESULTS OF THE TEST SHALL BE FURNISHED TO THE OWNER'S REPRESENTATIVE. CONTRACTOR TO PAY FOR ANY RETESTING.
22. THE CONTRACTOR SHALL ADJUST THE ALIGNMENT OF THE WATER LINES (HORIZONTALLY AND/OR VERTICALLY) TO ALLOW THE REQUIRED BRACING AT BENDS AND TEES.
23. EXISTING CASTINGS LOCATED IN FILL/CUT AREAS SHALL BE ADJUSTED TO ENSURE THAT THE TOP OF CASTING IS FLUSH WITH THE FINISHED GRADE.
24. WATER SERVICES SHALL BE ¾" TYPE K COPPER AND SHALL INCLUDE CORPORATION STOPS, CURB STOPS, PRESENT METER BOX AND ALL OTHER FITTINGS AS REQUIRED BY LOCAL DEPARTMENT.
25. THE OUTSIDE OF ALL MANHOLES SHALL BE COATED WITH BITUMINOUS PAINT.
26. ALL WATER LINE SERVICES SHALL TERMINATE AT A METER BOX LOCATED 10 FEET FROM THE R.O.W. LINE.
27. THE CONTRACTOR WILL PROVIDE ALL NECESSARY PROTECTIVE MEASURES TO SAFEGUARD EXISTING UTILITIES FROM DAMAGE DURING CONSTRUCTION OF THIS PROJECT. IN THE EVENT THAT SPECIAL EQUIPMENT IS REQUIRED TO WORK OVER AND AROUND THE UTILITIES, THE CONTRACTOR WILL BE REQUIRED TO FURNISH SUCH EQUIPMENT AT NO ADDITIONAL COST TO THE OWNER.
28. PRIOR TO SUBMITTING HIS BID, THE CONTRACTOR WILL BE SOLELY RESPONSIBLE FOR CONTACTING OWNERS OF ALL AFFECTED UTILITIES IN ORDER TO DETERMINE THE EXTENT TO WHICH UTILITY RELOCATIONS AND/OR ADJUSTMENTS WILL HAVE UPON THE SCHEDULE OF WORK FOR THE PROJECT. WHILE SOME WORK MAY BE REQUIRED 'AROUND' UTILITY FACILITIES THAT WILL REMAIN IN PLACE, OTHER UTILITY FACILITIES MAY NEED TO BE ADJUSTED CONCURRENTLY WITH THE CONTRACTOR'S OPERATIONS.
29. ALL CONNECTIONS TO EXISTING MANHOLES SHALL BE BY THE CORING AND RESILIENT SEAL METHOD.
30. FIRE HYDRANT ASSEMBLIES INCLUDE THE APPROPRIATE SIZED TEE (WITH KICKER), 6” LINE TO HYDRANT, 6” GATE VALVE (WITH VALVE BOX), AND FIRE HYDRANT (WITH KICKER). HYDRANTS SHALL BE INSTALLED AT LOCATIONS SHOWN ON THE PLANS.
31. THE CONCRETE CAPS AND ENCASEMENTS ON WATER AND SEWER LINES SHALL BE A MINIMUM OF 6” THICK. USE 3000 PSI CONCRETE.
32. ALL SANITARY SEWER SERVICES SHALL BE 6” DIAMETER AND EXTEND 10 FEET BEYOND THE PROPERTY LINE.
33. CONTRACTOR SHALL MARK THE LOCATION OF ALL NEW PVC LINES WITH #8 WIRE.
34. BACKFLOW PREVENTION DEVICE FOR THE DOMESTIC WATER SERVICE SHALL BE LOCATED INSIDE THE BUILDING, SEE PLUMBING PLANS.
35. SIAMESE STAND PIPE TO BE GALVANIZED STEEL.
36. ALL PROPOSED LOT CORNERS SHALL BE FIELD STAKED PRIOR TO CONSTRUCTION OF SANITARY SEWERS. CONTROL POINTS ARE AS SHOWN ON THE SITE LAYOUT PLAN.
37. THE HOME BUILDER SHALL VERIFY THE SANITARY SEWER SERVICE ELEVATION PRIOR TO SETTING THE FINISHED FLOOR ELEVATIONS FOR ALL LOTS. THE SANITARY SEWER MAIN AND SERVICES WERE DESIGNED BASED ON SETTING MINIMUM FINISHED FLOOR ELEVATIONS ON A NUMBER OF CRITICAL LOTS. THE HOME BUILDER SHALL ADHERE TO THE MINIMUM FINISHED FLOOR ELEVATIONS LISTED ON THE SANITARY SEWER SHEETS.
38. SEWER SERVICES TO BE 6” DIAMETER PVC AT A MINIMUM SLOPE OF 1.0% UNLESS SHOWN OTHERWISE ON THE DRAWINGS. LINES SHALL START 5' BEYOND THE BUILDINGS. COORDINATE CONNECTION POINTS WITH THE BUILDING PLUMBING DRAWINGS. PROVIDE A MINIMUM 30” OF COVER OVER ALL SEWER SERVICES IN GRASS AREAS AND 48” OF COVER IN PAVED AREAS.
39. ALL FIRE LINES SHALL BE INSTALLED BY A SPRINKLER CONTRACTOR LICENSED IN THE STATE OF THE PROJECT.

Littlejohn
An S&ME Company
1615 Edgewater Drive, Suite 200, ORLANDO, FLORIDA 32804
T 407.975.1273 F 407.975.1278 www.leainc.com
Christopher S. Grammier, P.E. 69919
Jay R. Hood PLA LA0001277
Florida Firm Registration No. 28050

SPR GROUP OF FLORIDA, INC.
913 VENTURE AVENUE, SUITE #1
LEESBURG, FL 34748
(352) 801-7992

PERMIT DOCUMENTS
SPRG LADY LAKE - OUTPATIENT CLINICAL BUILDING
LADY LAKE, LAKE COUNTY, FLORIDA

NO.	DATE	DESCRIPTION	BY	CHK	APV
△	3/21/16	LADY LAKE SUBMITTAL	CV	GH	CG

PROJECT NUMBER 20150902
DRAWING NUMBER C2.0
DRAWING NAME NOTES

G:\Projects\2015\20150902\dwg\Construction\20150902_C2-0_NOT.dwg-C2-0 Notes May 09, 2016 CGrammier

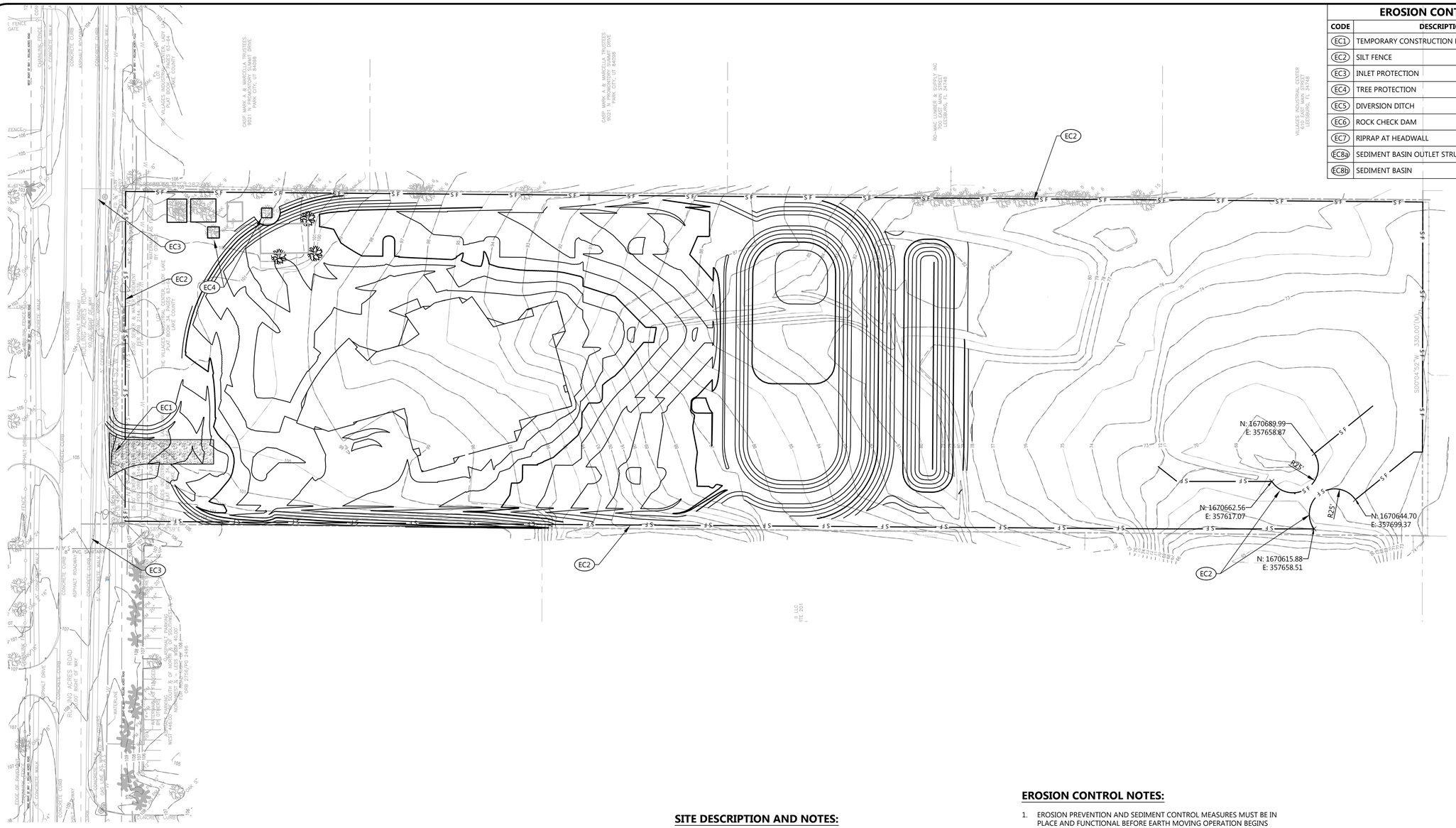

EROSION CONTROL KEYNOTES

CODE	DESCRIPTION	DET #/SHT #
EC1	TEMPORARY CONSTRUCTION ENTRANCE	
EC2	SILT FENCE	
EC3	INLET PROTECTION	
EC4	TREE PROTECTION	
EC5	DIVERSION DITCH	
EC6	ROCK CHECK DAM	
EC7	RIPRAP AT HEADWALL	
EC8a	SEDIMENT BASIN OUTLET STRUCTURE	
EC8b	SEDIMENT BASIN	

SITE DESCRIPTION AND NOTES:

THE SITE IS LOCATED ON METRO TAX MAP TAX MAP, PARCEL PARCEL NUM IN NASHVILLE, DAVIDSON COUNTY, TENNESSEE. CONSTRUCTION ACTIVITY ON THIS SITE WILL CONSIST OF DISTURBING APPROXIMATELY DISTURBED AREA± ACRES TO CONSTRUCT XXXXXXXXXX.

1. APPROXIMATE CONSTRUCTION TIME TABLE:
   BEGIN CONSTRUCTION - [date goes here]
   COMPLETE CONSTRUCTION JUNE 2016

1. CONSTRUCTION SEQUENCE:
   A. ATTEND METRO WATER SERVICES - WATER QUALITY DIVISION PRE-CONSTRUCTION MEETING.
   B. INSTALL CONSTRUCTION ENTRANCE AND SILT FENCE
   C. CONTACT METRO WATER SERVICES - WATER QUALITY DIVISION - EROSION CONTROL INSPECTOR FOR INSPECTION OF EROSION CONTROL DEVICES TO OBTAIN GRADING PERMIT.
   D. CLEAR AND GRUB THE REMAINING SITE.
   E. CONSTRUCT REMAINING SITE ACCORDING TO APPROVED PLANS, INCLUDING ALL ADDITIONAL EROSION CONTROL DEVICES.
   F. UPON PERMANENT SITE STABILIZATION SOD OR SEED / STRAW.
   G. REMOVE ALL OTHER EROSION TEMPORARY CONTROL DEVICES PRIOR TO AS-BUILT APPROVALS.

3. TOTAL PROJECT AREA = PARCEL ACREAGE (SF) SF (PARCEL ACREAGE± AC.)
   DISTURBED AREA = DISTURBED AREA (SF) S.F. (DISTURBED AREA± AC.)

EROSION CONTROL NOTES:

1. EROSION PREVENTION AND SEDIMENT CONTROL MEASURES MUST BE IN PLACE AND FUNCTIONAL BEFORE EARTH MOVING OPERATION BEGINS AND MUST BE CONSTRUCTED AND MAINTAINED THROUGHOUT THE CONSTRUCTION PERIOD. TEMPORARY MEASURES MAY BE REMOVED AT THE BEGINNING OF THE WORKDAY BUT MUST BE REPLACED AT THE END OF THE WORKDAY.
2. THE FOLLOWING RECORDS SHALL BE MAINTAINED ON OR NEAR SITE: THE DATES WHEN MAJOR GRADING ACTIVITIES OCCUR; THE DATES WHEN CONSTRUCTION ACTIVITIES TEMPORARILY OR PERMANENTLY CEASE ON A PORTION OF THE SITE; THE DATES WHEN STABILIZATION MEASURES ARE INITIATED; INSPECTION RECORDS AND RAINFALL RECORDS.
3. THE CONTRACTOR SHALL MAINTAIN A RAIN GAUGE AND DAILY RAINFALL RECORDS AT THE SITE OR USE A REFERENCE SITE FOR A RECORD OF DAILY AMOUNT OF PRECIPITATION.
4. PRE-CONSTRUCTION VEGETATIVE GROUND COVER SHALL NOT BE DESTROYED, REMOVED OR DISTURBED MORE THAN 10 DAYS PRIOR TO GRADING OR EARTH MOVING UNLESS THE AREA IS SEEDED AND/OR MULCHED OR OTHER TEMPORARY COVER IS INSTALLED.
5. CONSTRUCTION MUST BE SEQUENCED TO MINIMIZE THE EXPOSURE TIME OF GRADED OR DENUDED AREAS.
6. SEDIMENT SHOULD BE REMOVED FROM SEDIMENT TRAPS, SILT FENCES, SEDIMENTATION PONDS AND OTHER SEDIMENT CONTROLS AS NECESSARY AND MUST BE REMOVED WHEN DESIGN CAPACITY HAS BEEN REDUCED BY 50% OR AS DIRECTED BY OWNERS REPRESENTATIVE.
7. THE CONTRACTOR SHALL REMOVE SEDIMENT FROM ALL DRAINAGE STRUCTURES BEFORE ACCEPTANCE BY LOCAL GOVERNING AGENCY OR AS DIRECTED BY THE OWNER'S REPRESENTATIVE.
8. THE CONTRACTOR SHALL REMOVE THE TEMPORARY EROSION AND WATER POLLUTION CONTROL DEVICES ONLY AFTER A SOLID STAND OF GRASS HAS BEEN ESTABLISHED ON GRADED AREAS AND WHEN IN THE OPINION OF THE OWNER'S REPRESENTATIVE, THEY ARE NO LONGER NEEDED.

NOTE:
CONTRACTOR TO PROVIDE AN AREA FOR CONCRETE WASH DOWN AND EQUIPMENT FUELING. CONTROL OF OTHER SITE WASTES SUCH AS DISCARDED BUILDING MATERIALS, CHEMICALS, LITTER, AND SANITARY WASTES THAT MAY CAUSE ADVERSE IMPACTS TO WATER QUALITY IS ALSO REQUIRED BY THE GRADING PERMITTEE.

N

Know what's below.
Call before you dig.

0 25 50 100 150
GRAPHIC SCALE

Littlejohn
An S&ME Company
1615 Edgewater Drive, Suite 200, ORLANDO, FLORIDA 32804
T 407.975.1273 F 407.975.1278 www.leainc.com
Christopher S. Grammier, P.E. 69919
Jay R. Hood PLA LA0001277
Florida Firm Registration No. 28050

SPR GROUP OF FLORIDA, INC.
913 VENTURE AVENUE, SUITE #1
LEESBURG, FL 34748
(352) 801-7992

PERMIT DOCUMENTS
SPRG LADY LAKE - OUTPATIENT CLINICAL BUILDING
LADY LAKE, LAKE COUNTY, FLORIDA

NO.	DATE	DESCRIPTION	BY	CHK	APV
1	3/21/16	LADY LAKE SUBMITTAL	CV	GH	CG

PROJECT NUMBER
20150902

DRAWING NUMBER
C3.0

DRAWING NAME
EROSION CONTROL PLAN

G:\Projects\2015\20150902\dwg\Construction\20150902_C3-0_ERO.dwg-C3-0 Erosion Control Plan May 09, 2016 CGrammier

SCHEDULE OF INSPECTIONS AND MAINTENANCE NOTES

1. INSPECTIONS DESCRIBED IN PARAGRAPHS 2, 3 AND 4 BELOW, SHALL BE PERFORMED AT LEAST TWICE EVERY CALENDAR WEEK. INSPECTIONS SHALL BE PERFORMED AT LEAST 72 HOURS APART. WHERE SITES OR PORTION(S) OF CONSTRUCTION SITES HAVE BEEN TEMPORARILY STABILIZED, OR RUNOFF IS UNLIKELY DUE TO WINTER CONDITIONS (E.G., SITE COVERED WITH SNOW OR ICE) OR DUE TO EXTREME DROUGHT, SUCH INSPECTION ONLY HAS TO BE CONDUCTED ONCE PER MONTH UNTIL THAWING OR PRECIPITATION RESULTS IN RUNOFF OR CONSTRUCTION ACTIVITY RESUMES. INSPECTION REQUIREMENTS DO NOT APPLY TO DEFINABLE AREAS THAT HAVE BEEN FINALLY STABILIZED.

2. QUALIFIED PERSONNEL (PROVIDED BY THE PERMITTEE OR COOPERATIVELY BY MULTIPLE PERMITTEES) SHALL INSPECT DISTURBED AREAS OF THE CONSTRUCTION SITE THAT HAVE NOT BEEN FINALLY STABILIZED, AREAS USED FOR STORAGE OF MATERIALS THAT ARE EXPOSED TO PRECIPITATION, STRUCTURAL CONTROL MEASURES, LOCATIONS WHERE VEHICLES ENTER OR EXIT THE SITE, AND EACH OUTFALL.

3. DISTURBED AREAS AND AREAS USED FOR STORAGE OF MATERIALS THAT ARE EXPOSED TO PRECIPITATION SHALL BE INSPECTED FOR EVIDENCE OF, OR THE POTENTIAL FOR, POLLUTANTS ENTERING THE SITE'S DRAINAGE SYSTEM. EROSION PREVENTION AND SEDIMENT CONTROL MEASURES SHALL BE OBSERVED TO ENSURE THAT THEY ARE OPERATING CORRECTLY.

4. OUTFALL POINTS (WHERE DISCHARGES LEAVE THE SITE AND/OR ENTER WATERS OF THE STATE) SHALL BE INSPECTED TO DETERMINE WHETHER EROSION PREVENTION AND SEDIMENT CONTROL MEASURES ARE EFFECTIVE IN PREVENTING SIGNIFICANT IMPACTS TO RECEIVING WATERS. WHERE DISCHARGE LOCATIONS ARE INACCESSIBLE, NEARBY DOWNSTREAM LOCATIONS SHALL BE INSPECTED. LOCATIONS WHERE VEHICLES ENTER OR EXIT THE SITE SHALL BE INSPECTED FOR EVIDENCE OF OFFSITE SEDIMENT TRACKING.

5. BASED ON THE RESULTS OF THE INSPECTION, ANY INADEQUATE CONTROL MEASURES OR CONTROL MEASURES IN DISREPAIR SHALL BE REPLACED OR MODIFIED, OR REPAIRED AS NECESSARY, BEFORE THE NEXT RAIN EVENT, BUT IN NO CASE MORE THAN 7 DAYS AFTER THE NEED IS IDENTIFIED.

6. BASED ON THE RESULTS OF THE INSPECTION, THE SITE DESCRIPTION AND POLLUTION PREVENTION MEASURES IDENTIFIED IN THIS SWPPP SHALL BE REVISED AS APPROPRIATE, BUT IN NO CASE LATER THAN 7 DAYS FOLLOWING THE INSPECTION. SUCH MODIFICATIONS SHALL PROVIDE FOR TIMELY IMPLEMENTATION OF ANY CHANGES TO THE SWPPP, BUT IN NO CASE LATER THAN 14 DAYS FOLLOWING THE INSPECTION.

7. ALL INSPECTIONS SHALL BE DOCUMENTED ON THE CONSTRUCTION STORMWATER INSPECTION CERTIFICATION FORM. INSPECTION DOCUMENTATION WILL BE MAINTAINED ON SITE AND MADE AVAILABLE UPON REQUEST.

8. TRAINED CERTIFIED INSPECTORS SHALL COMPLETE INSPECTION DOCUMENTATION TO THE BEST OF THEIR ABILITY. FALSIFYING INSPECTION RECORDS OR OTHER DOCUMENTATION OR FAILURE TO COMPLETE INSPECTION DOCUMENTATION SHALL RESULT IN A VIOLATION OF THIS PERMIT AND ANY OTHER APPLICABLE ACTS OR RULES.

9. SUBSEQUENT OPERATOR(S) (PRIMARY PERMITTEES) WHO HAVE OBTAINED COVERAGE UNDER THE NPDES GENERAL PERMIT SHOULD CONDUCT TWICE WEEKLY INSPECTIONS, UNLESS THEIR PORTION(S) OF THE SITE HAS BEEN TEMPORARILY STABILIZED, OR RUNOFF IS UNLIKELY DUE TO WINTER CONDITIONS OR DUE TO EXTREME DROUGHT AS STATED IN PARAGRAPH A) ABOVE. THE PRIMARY PERMITTEE (SUCH AS A DEVELOPER) IS NO LONGER REQUIRED TO CONDUCT INSPECTIONS OF PORTIONS OF THE SITE THAT ARE COVERED BY A SUBSEQUENT PRIMARY PERMITTEE (SUCH AS A HOME BUILDER).

SITE ASSESSMENT NOTES

1. THE SITE ASSESSMENT SHALL BE PERFORMED BY INDIVIDUALS WITH THE FOLLOWING QUALIFICATIONS:
   - A LICENSED PROFESSIONAL ENGINEER OR LANDSCAPE ARCHITECT
   - A CERTIFIED PROFESSIONAL IN EROSION AND SEDIMENT CONTROL (CPESC) OR
   - A PERSON THAT SUCCESSFULLY COMPLETED THE "LEVEL II DESIGN PRINCIPLES FOR EROSION PREVENTION AND SEDIMENT CONTROL FOR CONSTRUCTION SITES" COURSE.

2. QUALITY ASSURANCE OF EROSION PREVENTION AND SEDIMENT CONTROLS SHALL BE DONE BY PERFORMING SITE ASSESSMENT AT A CONSTRUCTION SITE. THE SITE ASSESSMENT SHALL BE CONDUCTED AT EACH OUTFALL INVOLVING DRAINAGE TOTALING 10 OR MORE ACRES OR 5 OR MORE ACRES IF DRAINING TO AN IMPAIRED OR EXCEPTIONAL QUALITY WATERS, WITHIN A MONTH OF CONSTRUCTION COMMENCING AT EACH PORTION OF THE SITE THAT DRAINS THE QUALIFYING ACREAGE OF SUCH PORTION OF THE SITE.

3. AS A MINIMUM, SITE ASSESSMENT SHOULD BE PERFORMED TO VERIFY THE INSTALLATION, FUNCTIONALITY AND PERFORMANCE OF THE EPSC MEASURES DESCRIBED IN THE SWPPP REPORT. THE SITE ASSESSMENT SHOULD BE PERFORMED WITH THE INSPECTOR, AND SHOULD INCLUDE A REVIEW AND UPDATE (IF APPLICABLE) OF THE SWPPP REPORT. MODIFICATIONS OF PLANS AND SPECIFICATIONS FOR ANY BUILDING OR STRUCTURE, INCLUDING THE DESIGN OF SEDIMENT BASINS OR OTHER SEDIMENT CONTROLS INVOLVING STRUCTURAL, HYDRAULIC, HYDROLOGIC OR OTHER ENGINEERING CALCULATIONS SHALL BE PREPARED BY A LICENSED PROFESSIONAL ENGINEER.

4. THE SITE ASSESSMENT FINDINGS SHALL BE DOCUMENTED AND THE DOCUMENTATION KEPT WITH THE SWPPP REPORT AT THE SITE. AT A MINIMUM, THE DOCUMENTATION SHALL INCLUDE INFORMATION INCLUDED IN THE INSPECTION FORM PROVIDED IN APPENDIX D OF THE SWPPP REPORT. THE DOCUMENTATION MUST CONTAIN THE PRINTED NAME AND SIGNATURE OF THE INDIVIDUAL PERFORMING THE SITE ASSESSMENT AND THE FOLLOWING CERTIFICATION:

   "I CERTIFY UNDER PENALTY OF LAW THAT THIS REPORT AND ALL ATTACHMENTS ARE, TO THE BEST OF MY KNOWLEDGE AND BELIEF, TRUE, ACCURATE, AND COMPLETE. I AM AWARE THAT THERE ARE SIGNIFICANT PENALTIES FOR SUBMITTING FALSE INFORMATION, INCLUDING THE POSSIBILITY OF FINE AND IMPRISONMENT FOR KNOWING VIOLATIONS."

5. THE SITE ASSESSMENT CAN TAKE THE PLACE OF ONE OF THE TWICE WEEKLY INSPECTIONS REQUIREMENT.

6. FDEP MAY REQUIRE ADDITIONAL SITE ASSESSMENT(S) TO BE PERFORMED IF SITE INSPECTION BY TDEC'S PERSONNEL REVEALS SITE CONDITIONS THAT HAVE POTENTIAL OF CAUSING POLLUTION TO THE WATERS OF THE STATE.

NOTE:

CONTRACTOR SHALL INSTALL A 4'X4' WEATHER PROOF SIGN (6' HEIGHT) AT THE MAIN CONSTRUCTION ENTRANCE. THE SIGN SHALL HAVE THE FOLLOWING INFORMATION:

1. A COPY OF THE NOTICE OF COVERAGE WITH THE NPDES PERMIT NUMBER (FURNISHED BY ENGINEER).
2. THE NAME AND TELEPHONE NUMBER OF A LOCAL CONTACT PERSON (FURNISHED BY CONSTRUCTION MANAGER).
3. DESCRIPTION OF PROJECT (FURNISHED BY CONSTRUCTION MANAGER).

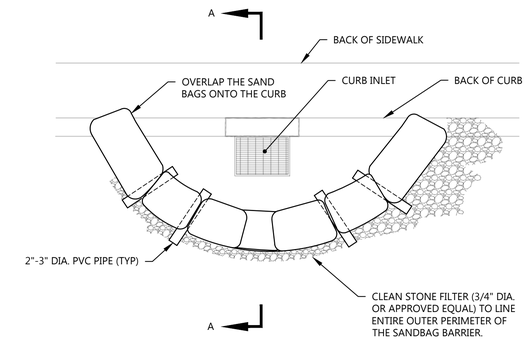

PLAN

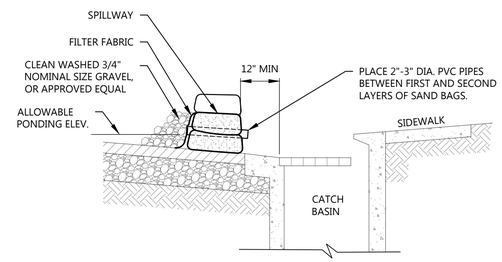

SECTION A-A

NOTES:

1. NOT APPLICABLE IN AREAS OF HIGH SILTS AND CLAYS WITHOUT USE OF FILTER FABRIC LAYER.
2. PERIODICALLY REMOVE AND REPLACE GRAVEL. OLD GRAVEL MAY BE USED AS BACKFILL MATERIAL IF APPROVED BY THE ENGINEER.

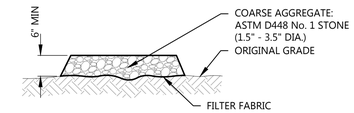

SECTION

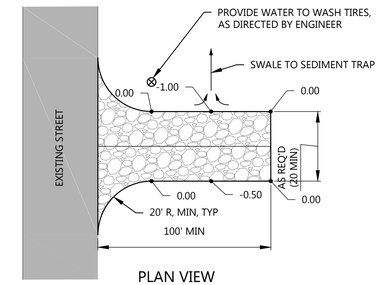

PLAN VIEW

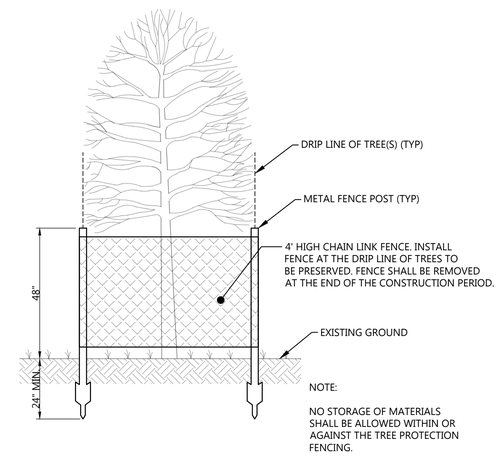

NOTE:

NO STORAGE OF MATERIALS SHALL BE ALLOWED WITHIN OR AGAINST THE TREE PROTECTION FENCING.

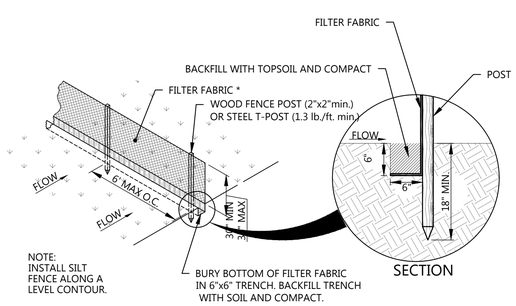

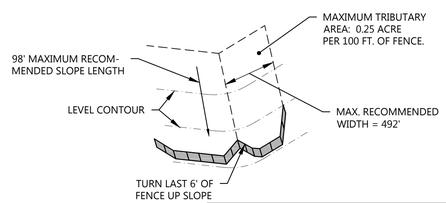

SPECIFICATIONS	
Tensile Strength (Lbs. Min.) (1) (ASTM D-4632)	Warp-120 Fill -100
Elongation (%Max.) (ASTM D-4632)	40
AOS (Apparent Opening Size) (Max. Sieve Size) (ASTM D-4751)	#30
Flow Rate (Gal/Min/Sq. Ft.) (GDT-87)	25
Ultraciolet Stability (2) (ASTM D-4632 after 300 hours weathering in accordance with ASTM D-4355)	80
Bursting Strength (PSI Min.) (ASTM D-3786 Diaphram Bursting Strength Tester)	175
Minimum Fabric Width (Inches)	36

Littlejohn
An S&ME Company
1615 Edgewater Drive, Suite 200, ORLANDO, FLORIDA 32804
T 407.975.1273 F 407.975.1278 www.leainc.com
Christopher S. Grammier, P.E. 69919
Jay R. Hood PLA LA0001277
Florida Firm Registration No. 28050

SPR GROUP OF FLORIDA, INC.
913 VENTURE AVENUE, SUITE #1
LEESBURG, FL 34748
(352) 801-7992

PERMIT DOCUMENTS
SPRG LADY LAKE - OUTPATIENT CLINICAL BUILDING
LADY LAKE, LAKE COUNTY, FLORIDA

NO.	DATE	DESCRIPTION	BY	CHK	APV
1	3/21/16	LADY LAKE SUBMITTAL	CV	GH	CG

PROJECT NUMBER
20150902

DRAWING NUMBER
C3.1

DRAWING NAME
EROSION CONTROL DETAILS

G:\Projects\2015\20150902\dwg\Construction\20150902_C3-0_ERO.dwg-C3-1 Erosion Control Details May 09, 2016 CGrammier

VMS MESSAGE:
FOR USE 1 WEEK PRIOR TO BEGIN CONSTRUCTION

ROAD WORK

BEGINS –DATE–

VMS PER FDOT INDEX 6740

UNEVEN LANES SIGNAGE

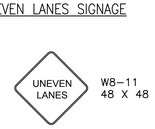

W8–11
48 X 48

NOTE:
FOR USAGE AND SPACING REQUIREMENTS, REFER TO INDEX 600, SHEET 10 OF 13

ADVANCED SIGNING DETAIL (FLAGGING OPERATIONS) –– ROLLING ACRES ROAD

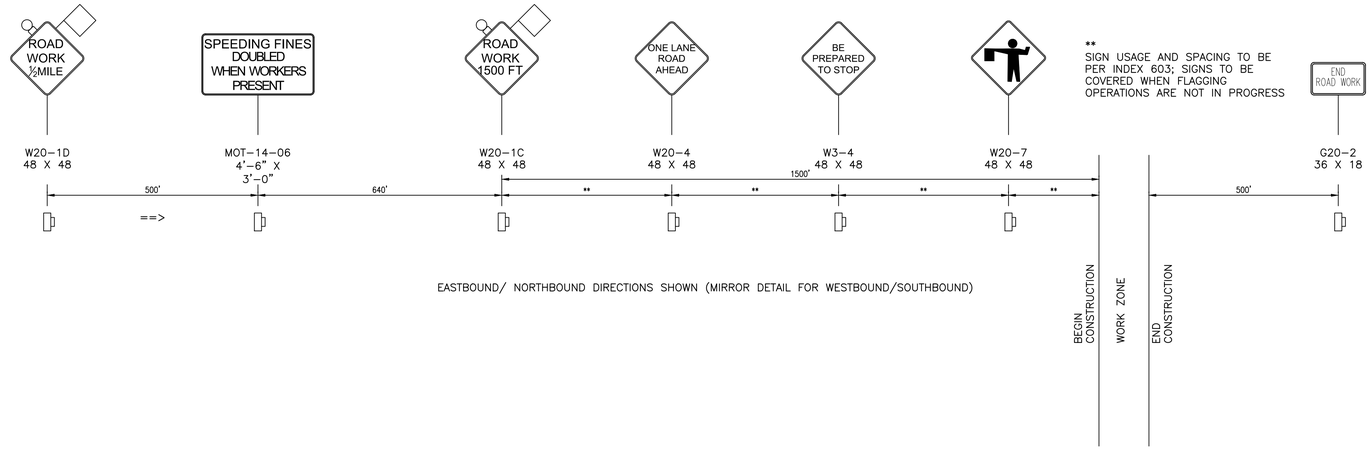

ADVANCED SIGNING DETAIL (ALL OTHER ACTIVITIES) –– ROLLING ACRES ROAD

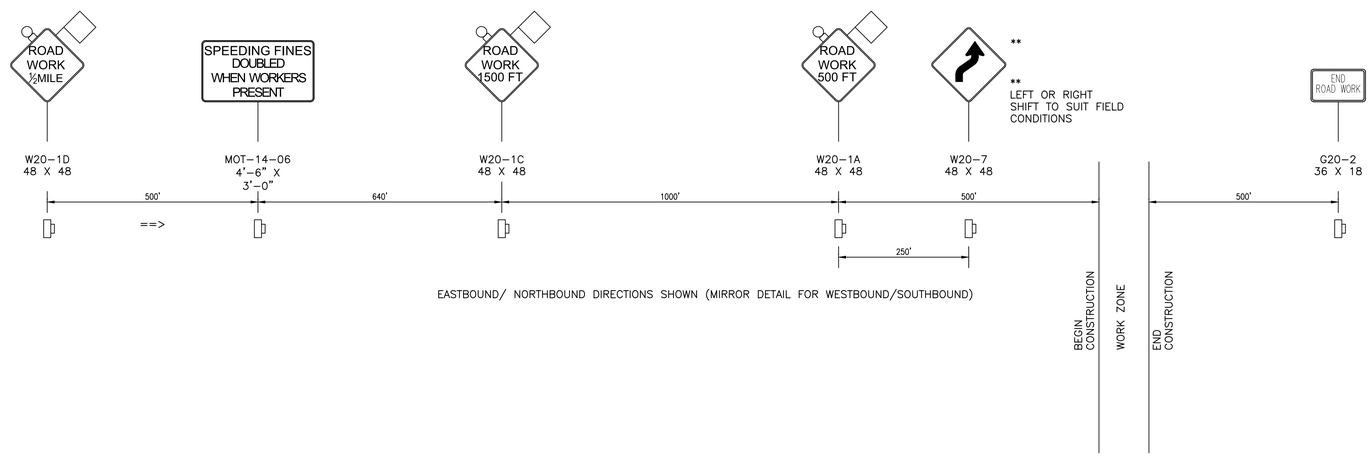

GENERAL NOTES:

1. ALL TRAFFIC CONTROL PROCEDURES AND DEVICES SHALL CONFORM TO THE REQUIREMENTS SET FORTH IN THE MANUAL ON UNIFORM TRAFFIC CONTROL DEVICES (MUTCD, 2009 EDITION), THE FDOT DESIGN STANDARDS (INDEX 600–SERIES), AND THE NOTES AND DETAILS IN THIS PLAN.
2. LANE CLOSURES OR OTHER TRAFFIC CONTROL NECESSARY FOR THE PLACEMENT, RELOCATION, OR REMOVAL OF BARRICADES, BARRIER WALL OR OTHER TRAFFIC CONTROL DEVICES SHALL BE EXECUTED IN ACCORDANCE WITH FDOT STANDARD INDICES 600–SERIES.
3. CONTRACTOR TO MAINTAIN ADEQUATE DRAINAGE AND HISTORICAL DRAINAGE PATTERNS TO PREVENT FLOODING OR DRAINAGE TO FLOW TO ROADWAY OR ROADSIDE AREAS EXISTING, UNDER CONSTRUCTION, OR COMPLETED. THE CONTRACTOR SHALL PROVIDE ANY TEMPORARY DRAINAGE MEASURES AS REQUIRED TO ADEQUATELY DRAIN THE PROJECT AND TEMPORARY TRAVELED ROADWAYS. ANY ADDITIONAL COSTS ASSOCIATED WITH DRAINAGE (TEMPORARY DRAINAGE STRUCTURES AND THE REMOVAL OF THE SAME INCLUDING THE DESILTING OF THE PERMANENT DRAINAGE STRUCTURES TO REMAIN)SHALL BE INCIDENTAL TO THE COST OF MAINTENANCE OF TRAFFIC. CONTRACTOR TO SUBMIT A DRAINAGE CONTROL PLAN PRIOR TO CONSTRUCTION.
4. ALL DRAINAGE INLETS THAT ARE CONSTRUCTED PRIOR TO FINAL SURROUNDING GRADE BEING ACHIEVED WILL REQUIRE TEMPORARY COVERING THAT WILL ALLOW DRAINAGE FLOW AND PROTECT THE INLET DURING TCP PHASES AND SHALL BE INCIDENTAL TO THE COST OF MAINTENANCE OF TRAFFIC.
5. REGULATORY SPEED FOR ROLLING ACRES ROAD SHALL BE MAINTAINED AT THEIR EXISTING POSTED SPEEDS AT ALL TIMES DURING CONSTRUCTION.
6. THE CONTRACTOR SHALL COMPLY TO NOISE LEVEL RESTRICTIONS STATED IN THE LOCAL NOISE ORDINANCE. METHODS TO MAINTAIN NOISE LEVELS WITHIN ACCEPTABLE LIMITS SHALL INCLUDE BUT NOT BE LIMITED TO TEMPORARY NOISE BARRIERS, ENCLOSURES FOR EQUIPMENT, MUFFLERS, ETC.
7. HEAVY TRAFFIC CONDITIONS, ACCIDENTS, AND ANY UNFORESEEN EMERGENCIES MAY REQUIRE RESTRICTION OR REMOVAL OF ANY FLAGGING OPERATIONS CLOSURE. THE CONTRACTOR SHALL MAKE THE NECESSARY ADJUSTMENTS WITHOUT DELAY AT THE DIRECTION OF LAKE COUNTY'S ENGINEER. FLAGGING OPERATIONS WILL NOT BE PERMITTED DURING PEAK HOURS.
8. WHEN CONSTRUCTION EQUIPMENT IS BEING TRANSPORTED OR DRIVEN ON OPEN TRAVEL LANES, THE CONTRACTOR SHALL COMPLY WITH THE FDOT DESIGN STANDARDS INDEX 600–SERIES. IT IS THE RESPONSIBILITY OF THE CONTRACTOR TO MAINTAIN CLEAR ZONE REQUIREMENTS FOR EQUIPMENT, MATERIAL STORAGE, AND WORK ZONE PROTECTION AS SPECIFIED IN STANDARD INDEX 600.
9. ARROWS (==>) SHOWN IN THESE PLANS DENOTE NUMBER OF LANES AND DIRECTION OF TRAFFIC ONLY AND DO NOT INDICATE PAVEMENT MARKINGS.
10. A CERTIFIED TRAFFIC CONTROL SUPERVISOR (TCS) SHALL BE ON SITE WHEN CONTRACTOR IS WORKING AND SHALL BE ON CALL FOR EMERGENCIES WHEN THE CONTRACTOR IS NOT AVAILABLE. THE CONTRACTOR IS RESPONSIBLE FOR PROVIDING HE ENGINEER A 24–HOUR ON–CALL NUMBER.
11. ALL DROP–OFF HAZARDS ARE TO BE MITIGATED IN ACCORDANCE WITH INDEX 600:

    WHERE MISCELLANEOUS CONSTRUCTION ACTIVITIES (WIDENING, SHOULDER CONTRUCTION/RE–CONSTRUCITON, MILLING, RESURFACING, AND OVERBUILT, ETC.) ARE SHOWN IN THE PLANS AS BEING PROTECTED BY BARRICADES, DRUMS, OR OTHER CHANNELIZING DEVICES PER INDEX 600, ALL DROP–OFF HAZARDS ARE TO BE REMOVED AT THE END OF EACH DAILY WORK PERIOD THOUGH THE USE OF SHOULDER TREATMENT AS DETAILED IN INDEX 600.

    COST OF DROP–OFF MITIGATION IS INCLUDED IN THE COST OF MAINTENANCE OF TRAFFIC.

Littlejohn
An S&ME Company
1615 Edgewater Drive, Suite 200, ORLANDO, FLORIDA 32804
T 407.975.1273 F 407.975.1278 www.leainc.com
Christopher S. Grammier, P.E. 69919
Jay R. Hood PLA LA0001277
Florida Firm Registration No. 28050

SPR GROUP OF FLORIDA, INC.
913 VENTURE AVENUE, SUITE #1
LEESBURG, FL 34748
(352) 801-7992

PERMIT DOCUMENTS
SPRG LADY LAKE - OUTPATIENT CLINICAL BUILDING
LADY LAKE, LAKE COUNTY, FLORIDA

NO.	DATE	DESCRIPTION	BY	CHK	APV
1	3/21/16	LADY LAKE SUBMITTAL	CV	GH	CG

PROJECT NUMBER
20150902

DRAWING NUMBER
C3.2

DRAWING NAME
MOT-GEN. NOTES

G:\Projects\2015\20150902\dwg\Construction\20150902_C3-2_MOT.dwg-C3-2 MOT-GEN. NOTES May 09, 2016 CGrammier

PHASE 1–A (NOT SHOWN)

USE OFF–PEAK HOUR FLAGGING OPERATIONS PER INDEX 600–SERIES AS NECESSARY TO CONSTRUCT ANY STORM OR UTILITY PIPES UNDER THE EXISTING ROADWAY:

ALL TRENCHES MUST BE BACKFILLED AND COVERED WITH ASPHALT OR COVERED WITH A STEEL PLATE AND SECURED ON ALL SIDES WITH ASPHALT PAVEMENT AND ALL LANES RE–OPENED TO TRAFFIC AT THE END OF EACH WORK PERIOD.

APPLY TEMPORARY PAVEMENT MARKINGS TO PROVIDE 2–10' (MIN) TRAVEL LANES ALONG ROLLING ACRES RD:

ALL LANE SHIFTS AND TRANSITIONS TO BE PER INDEX 600

PHASE 1

BEGIN CONSTRUCTION OF THE PROPOSED ROADWAY IMPROVEMENTS FROM BEGIN PROJECT TO END PROJECT ALONG ROLLING ACRES ROAD.

USE OFF–PEAK HOUR FLAGGING OPERATIONS PER INDEX 600–SERIES AS NECESSARY TO CONSTRUCT THE PROPOSED ROADWAY WIDENING.

ALL DROP–OFF HAZARDS SHALL BE MITIGATED PER THE REQUIREMENTS OF INDEX 600, SHEET 10 OF 13

PHASE 1B (NOT SHOWN)

USE OFF–PEAK HOUR FLAGGING OPERATIONS PER INDEX 600–SERIES AS NECESSARY TO COMPLETE ANY REMAINING CONSTRUCTION ACTIVITIES ON ROLLING ACRES ROAD AND TO PLACE THE FRICTION COURSE AND FINAL PAVEMENT MARKINGS.

AT THE END OF PHASE III, ALL ROADWAY CONSTRUCTION ACTIVITIES ON ROLLING ACRES ROAD SHALL BE COMPLETE.

TYPICAL SECTION – PHASE I
ROLLING ACRES ROAD

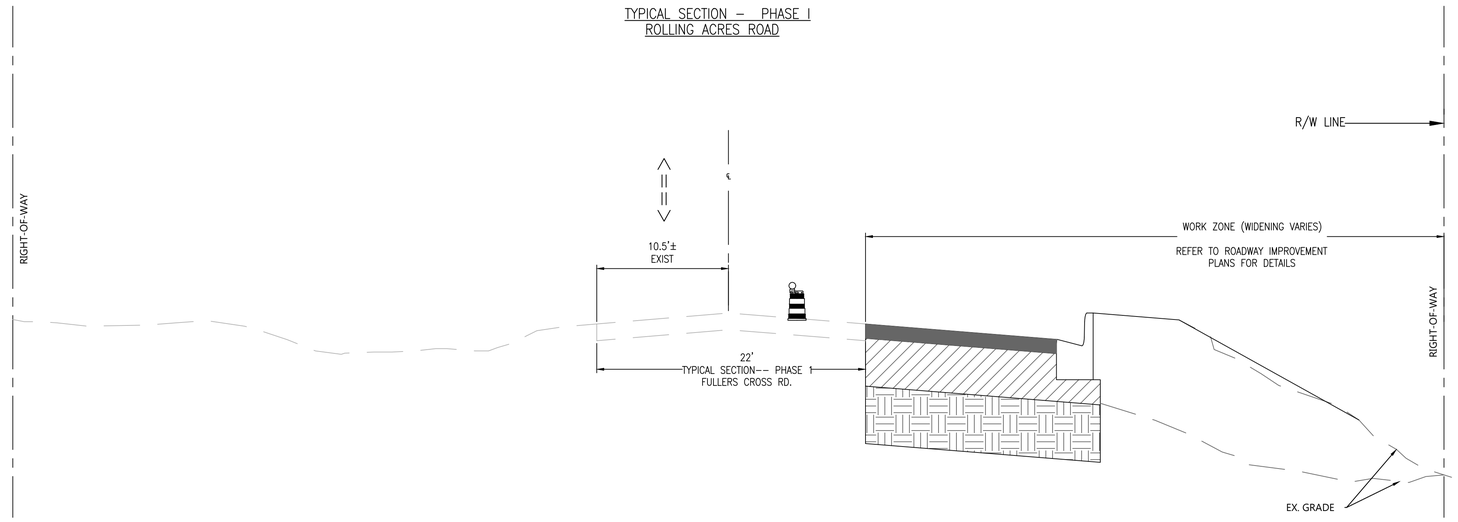

*
4' ± BUFFER TO WORK ZONE

CHANNELIZING DEVICE PER INDEX 600 (DRUM SHOWN): ALL DROP–OFF HAZARDS TO BE REMOVED PER INDEX 600–SERIES AT THE END OF EACH WORK PERIOD.

OPTION:
THE CONTRACTOR MAY SUBSTITUTE TEMPORARY LOW PROFILE BARRIER WITH A 1' SHOULDER AND 9" OFFSET TO THE WORK ZONE IN LIEU OF USING THE INDEX–600 SHOULDER TREATMENT OPTION; USE OF THE INDEX–412 BARRIER SHALL BE AT NO ADDITIONAL COST TO CLIENT.

TYPICAL SECTION -- PHASE
ROLLING ACRES ROAD

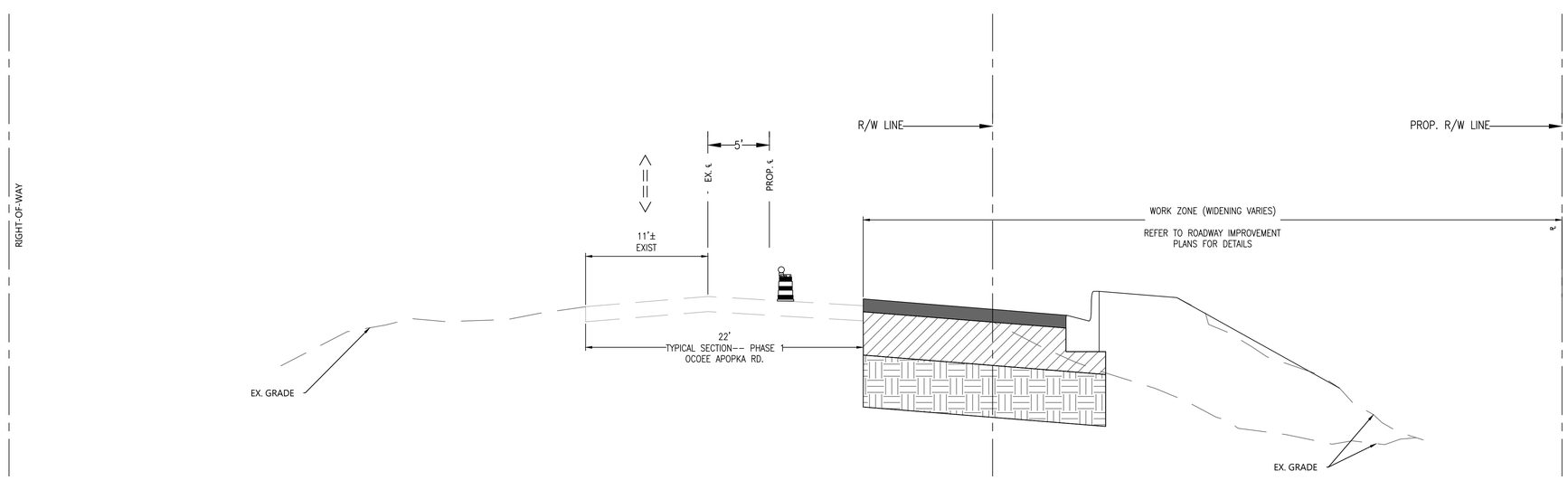

Littlejohn
An S&ME Company
1615 Edgewater Drive, Suite 200, ORLANDO, FLORIDA 32804
T 407.975.1273 F 407.975.1278 www.leainc.com
Christopher S. Grammier, P.E. 69919
Jay R. Hood PLA LA0001277
Florida Firm Registration No. 28050

SPR GROUP OF FLORIDA, INC.
913 VENTURE AVENUE, SUITE #1
LEESBURG, FL 34748
(352) 801-7992

PERMIT DOCUMENTS
SPRG LADY LAKE - OUTPATIENT CLINICAL BUILDING
LADY LAKE, LAKE COUNTY, FLORIDA

NO.	DATE	DESCRIPTION	BY	CHK	APV
1	3/21/16	LADY LAKE SUBMITTAL	CV	GH	CG

PROJECT NUMBER
20150902

DRAWING NUMBER
C3.3

DRAWING NAME
MOT-PHASE L

G:\Projects\2015\20150902\dwg\Construction\20150902_C3-2_MOT.dwg-C3-3 MOT-PHASE I May 09, 2016 CGrammier

PHASE 2

MILL, RESURFACE (EXCLUDING FRICTION COURSE), AND OVERBUILD IN ACCORDANCE WITH THE ROADWAY IMPROVEMENT PLANS.

APPLY TEMPORARY PAVEMENT MARKINGS TO PROVIDE 2–10' (MIN) TRAVEL LANES ALONG FULLERS CROSS RD.

ALL LANE SHIFTS AND TRANSITIONS TO BE PER INDEX 600.

SHIFT TRAFFIC INTO THE PHASE II TRAFFIC PATTERN

COMPLETE CONSTRUCTION OF THE PROPOSED ROADWAY IMPROVEMENTS FROM BEGIN PROJECT TO END PROJECT ALONG ROLLING ACRES RD.

USE OFF–PEAK HOUR FLAGGING OPERATIONS PER INDEX 600–SERIES AS NECESSARY TO CONSTRUCT THE PROPOSED ROADWAY WIDENING.

ALL DROOP–OFF HAZARDS SHALL BE MITIGATED PER THE REQUIREMENTS OF INDEX 600, SHEET 10 OF 13.

PHASE 3 (NOT SHOWN)

USE OFF–PEAK HOUR FLAGGING OPERATIONS PER INDEX 600–SERIES AS NECESSARY TO COMPLETE ANY REMAINING CONSTRUCTION ACTIVITIES ON ROLLING ACRES RD. AND TO PLACE THE FRICTION COURSE AND FINAL PAVEMENT MARKINGS.

AT THE END OF PHASE III, ALL ROADWAY CONSTRUCTION ACTIVITIES SHALL BE COMPLETE

TYPICAL SECTION – PHASE II
ROLLING ACES ROAD

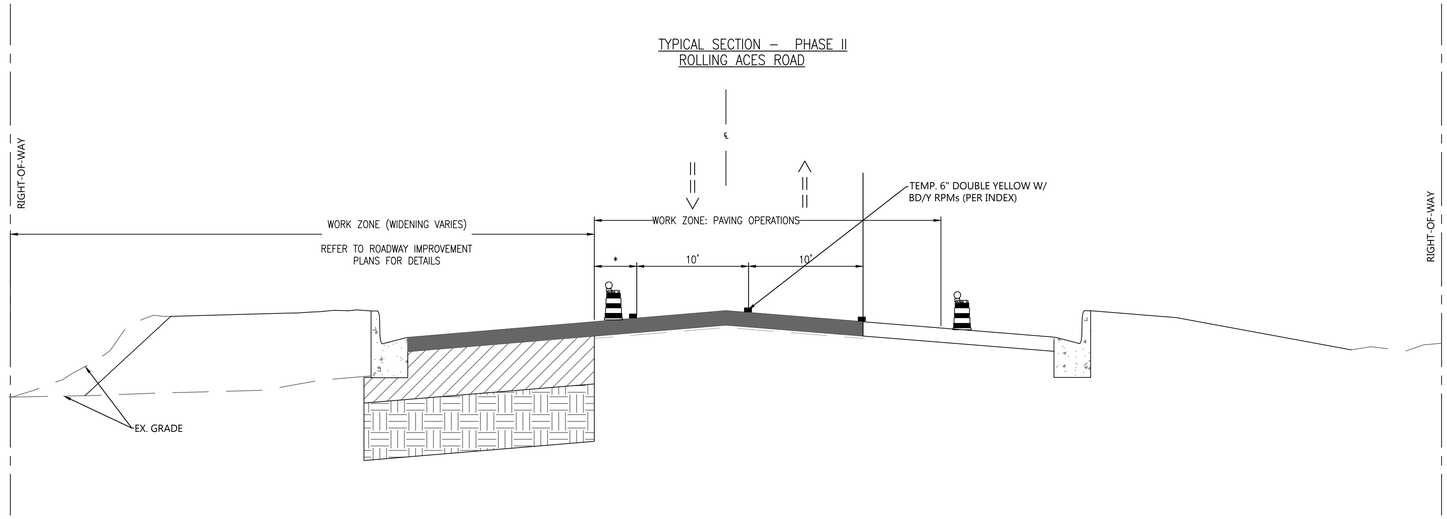

*
4' ± BUFFER TO WORK ZONE

CHANNELIZING DEVICE PER INDEX 600 (DRUM SHOWN): ALL DROP–OFF HAZARDS TO BE REMOVED PER INDEX 600–SERIES AT THE END OF EACH WORK PERIOD.

OPTION:
THE CONTRACTOR MAY SUBSTITUTE TEMPORARY LOW PROFILE BARRIER WITH A 1' SHOULDER AND 9" OFFSET TO THE WORK ZONE IN LIEU OF USING THE INDEX–600 SHOULDER TREATMENT OPTION; USE OF THE INDEX–412 BARRIER SHALL BE AT NO ADDITIONAL COST TO CLIENT.

Littlejohn
An S&ME Company
1615 Edgewater Drive, Suite 200, ORLANDO, FLORIDA 32804
T 407.975.1273 F 407.975.1278 www.leainc.com
Christopher S. Grammier, P.E. 69919
Jay R. Hood PLA LA0001277
Florida Firm Registration No. 28050

SPR GROUP OF FLORIDA, INC.
913 VENTURE AVENUE, SUITE #1
LEESBURG, FL 34748
(352) 801-7992

PERMIT DOCUMENTS
SPRG LADY LAKE - OUTPATIENT CLINICAL BUILDING
LADY LAKE, LAKE COUNTY, FLORIDA

NO.	DATE	DESCRIPTION	BY	CHK	APV
1	3/21/16	LADY LAKE SUBMITTAL	CV	GH	CG

PROJECT NUMBER
20150902

DRAWING NUMBER
C3.4

DRAWING NAME
MOT-PHASE LL

G:\Projects\2015\20150902\dwg\Construction\20150902_C3-2_MOT.dwg-C3-4 MOT-PHASE II May 09, 2016 CGrammier

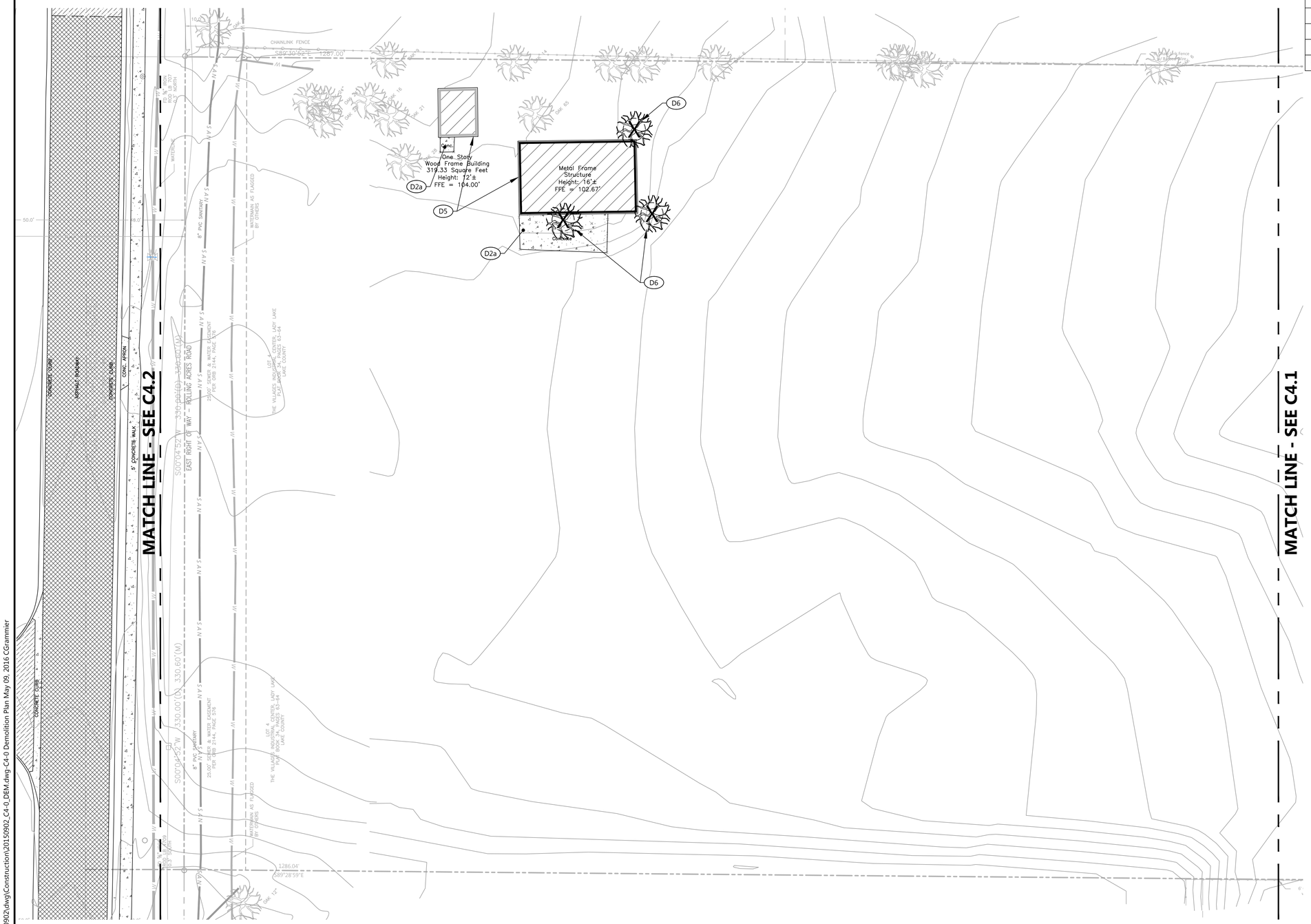

DEMOLITION KEYNOTES

CODE	DESCRIPTION	DET #/SHT #
D1	REMOVE EXISTING ASPHALT PAVEMENT	
D2a	REMOVE EXISTING CONCRETE PAVEMENT	
D2b	REMOVE EXISTING CONCRETE SIDEWALK	
D3	REMOVE EXISTING CONCRETE CURB	
D4	EVENLY SAWCUT	
D5	REMOVE EXISTING BUILDING/STRUCTURE	
D6	REMOVE EXISTING TREE	
D7	MILL EXISTING ASPHALT PAVEMENT	

PROPOSED FEATURES LEGEND

- BUILDING TO REMOVE
- CONCRETE TO REMOVE
- ASPHALT PAVEMENT TO REMOVE
- ASPHALT PAVEMENT TO MILLED
- TREES TO BE REMOVED

N

811 Know what's below. Call before you dig.

0 10 20 40 60
GRAPHIC SCALE

Littlejohn
An S&ME Company
1615 Edgewater Drive, Suite 200, ORLANDO, FLORIDA 32804
T 407.975.1273 F 407.975.1278 www.leainc.com
Christopher S. Grammier, P.E. 69919
Jay R. Hood PLA LA0001277
Florida Firm Registration No. 28050

SPR GROUP OF FLORIDA, INC.
913 VENTURE AVENUE, SUITE #1
LEESBURG, FL 34748
(352) 801-7992

PERMIT DOCUMENTS
SPRG LADY LAKE - OUTPATIENT CLINICAL BUILDING
LADY LAKE, LAKE COUNTY, FLORIDA

NO.	DATE	DESCRIPTION	BY	CHK	APV
1	3/21/16	LADY LAKE SUBMITTAL	CV	GH	CG

PROJECT NUMBER
20150902

DRAWING NUMBER
C4.0

DRAWING NAME
DEMOLITION PLAN

G:\Projects\2015\20150902\dwg\Construction\20150902_C4-0_DEM.dwg-C4-0 Demolition Plan May 09, 2016 CGrammier

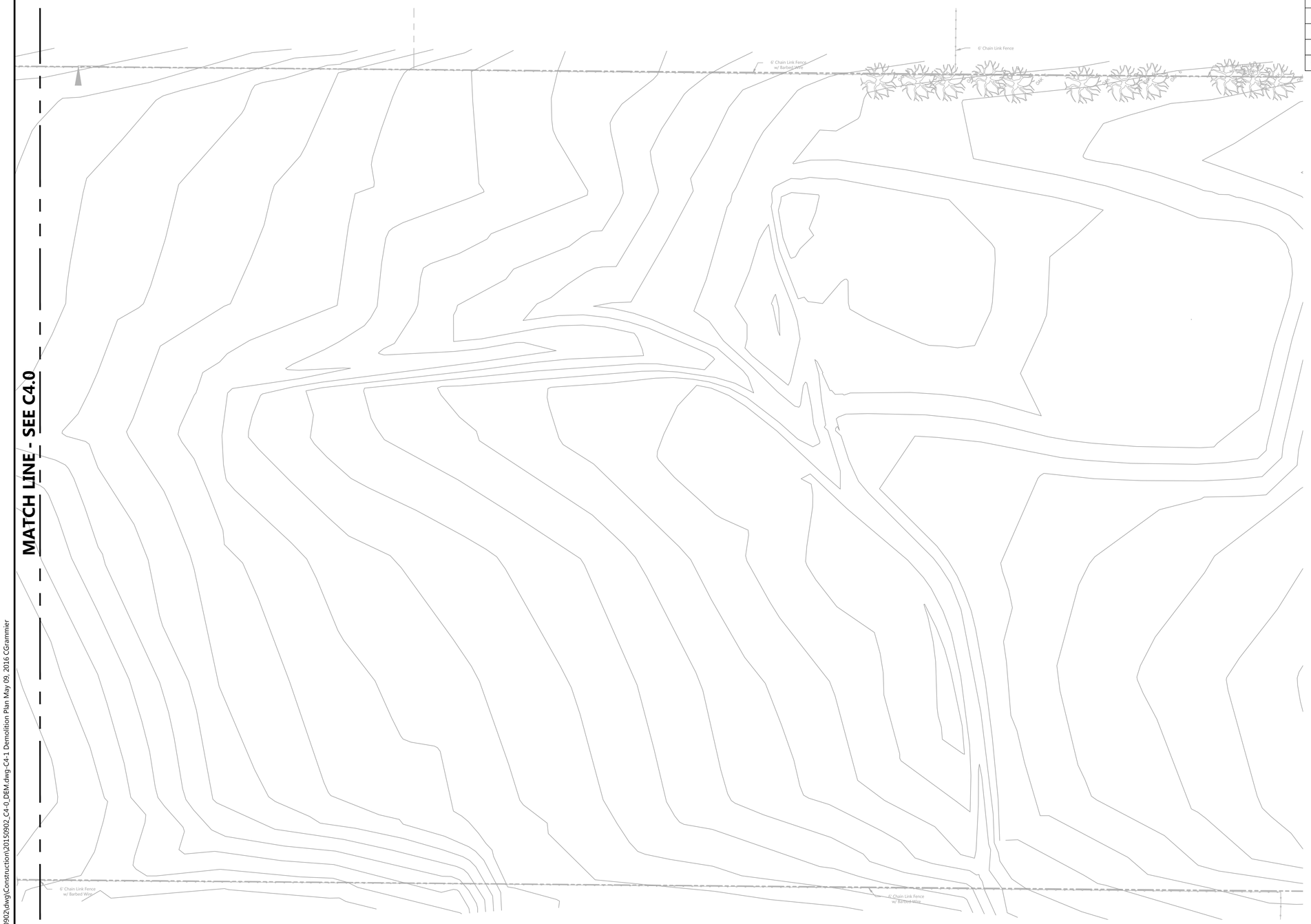

DEMOLITION KEYNOTES

CODE	DESCRIPTION	DET #/SHT #
D1	REMOVE EXISTING ASPHALT PAVEMENT	
D2a	REMOVE EXISTING CONCRETE PAVEMENT	
D2b	REMOVE EXISTING CONCRETE SIDEWALK	
D3	REMOVE EXISTING CONCRETE CURB	
D4	EVENLY SAWCUT	
D5	REMOVE EXISTING BUILDING/STRUCTURE	
D6	REMOVE EXISTING TREE	
D7	MILL EXISTING ASPHALT PAVEMENT	

PROPOSED FEATURES LEGEND

- BUILDING TO REMOVE
- CONCRETE TO REMOVE
- ASPHALT PAVEMENT TO REMOVE
- ASPHALT PAVEMENT TO MILLED
- TREES TO BE REMOVED

N

Know what's below. Call before you dig.

0 10 20 40 60

GRAPHIC SCALE

Littlejohn
An S&ME Company
1615 Edgewater Drive, Suite 200, ORLANDO, FLORIDA 32804
T 407.975.1273 F 407.975.1278 www.leainc.com
Christopher S. Grammier, P.E. 69919
Jay R. Hood PLA LA0001277
Florida Firm Registration No. 28050

SPR GROUP OF FLORIDA, INC.
913 VENTURE AVENUE, SUITE #1
LEESBURG, FL 34748
(352) 801-7992

PERMIT DOCUMENTS

SPRG LADY LAKE - OUTPATIENT CLINICAL BUILDING

LADY LAKE, LAKE COUNTY, FLORIDA

NO.	DATE	DESCRIPTION	BY	CHK	APV
1	3/21/16	LADY LAKE SUBMITTAL	CV	GH	CG

PROJECT NUMBER
20150902

DRAWING NUMBER
C4.1

DRAWING NAME
DEMOLITION PLAN

G:\Projects\2015\20150902\dwg\Construction\20150902_C4-0_DEM.dwg-C4-1 Demolition Plan May 09, 2016 CGrammier

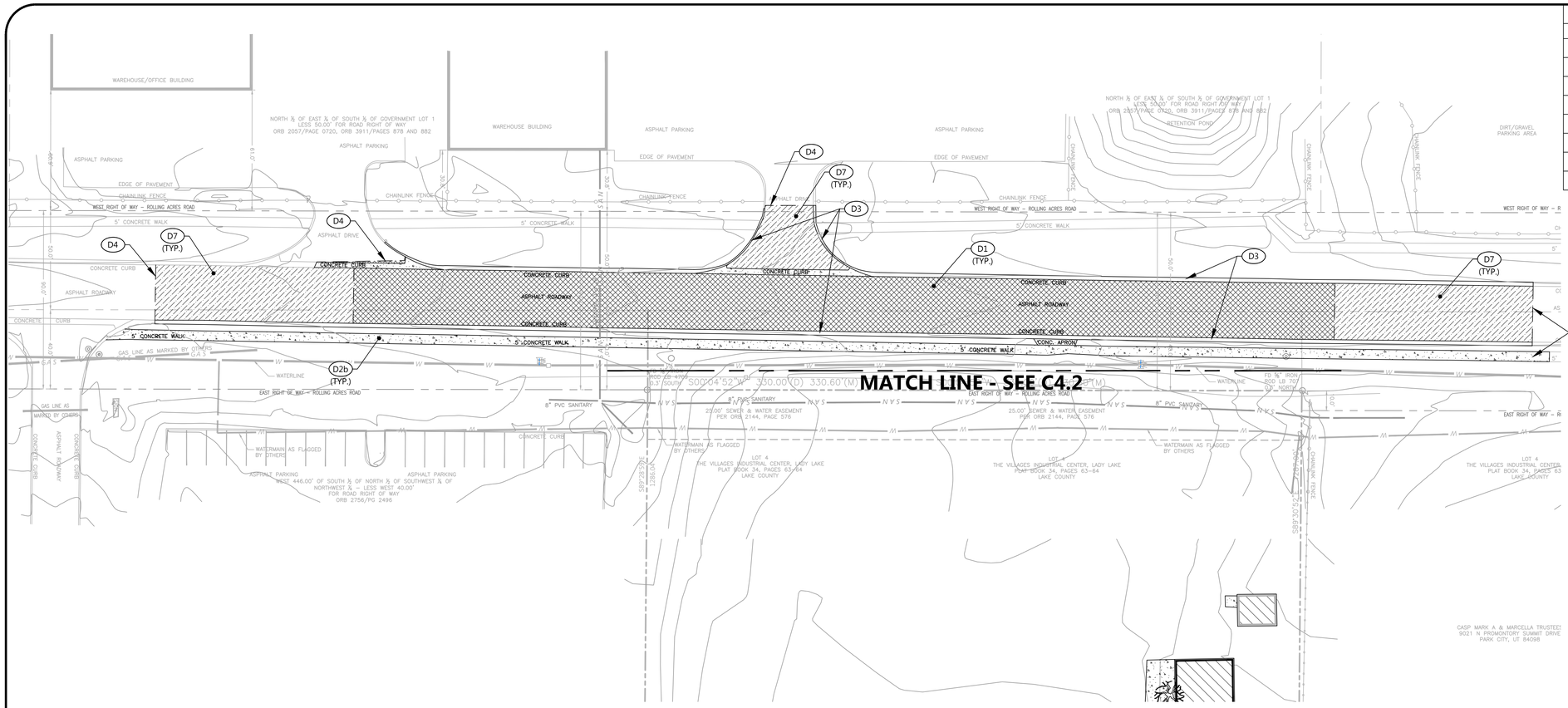

DEMOLITION KEYNOTES

CODE	DESCRIPTION	DET #/SHT #
D1	REMOVE EXISTING ASPHALT PAVEMENT	
D2a	REMOVE EXISTING CONCRETE PAVEMENT	
D2b	REMOVE EXISTING CONCRETE SIDEWALK	
D3	REMOVE EXISTING CONCRETE CURB	
D4	EVENLY SAWCUT	
D5	REMOVE EXISTING BUILDING/STRUCTURE	
D6	REMOVE EXISTING TREE	
D7	MILL EXISTING ASPHALT PAVEMENT	

PROPOSED FEATURES LEGEND

- BUILDING TO REMOVE
- CONCRETE TO REMOVE
- ASPHALT PAVEMENT TO REMOVE
- ASPHALT PAVEMENT TO MILLED
- TREES TO BE REMOVED

Know what's below.
Call before you dig.

N

GRAPHIC SCALE
0 15 30 60 90

Littlejohn
An S&ME Company
1615 Edgewater Drive, Suite 200, ORLANDO, FLORIDA 32804
T 407.975.1273 F 407.975.1278 www.leainc.com
Christopher S. Grammier, P.E. 69919
Jay R. Hood PLA LA0001277
Florida Firm Registration No. 28050

SPR GROUP OF FLORIDA, INC.
913 VENTURE AVENUE, SUITE #1
LEESBURG, FL 34748
(352) 801-7992

PERMIT DOCUMENTS
SPRG LADY LAKE - OUTPATIENT CLINICAL BUILDING
LADY LAKE, LAKE COUNTY, FLORIDA

NO.	DATE	DESCRIPTION	BY	CHK	APV
1	3/21/16	LADY LAKE SUBMITTAL	CV	GH	CG

PROJECT NUMBER
20150902

DRAWING NUMBER
C4.2

DRAWING NAME
DEMOLITION PLAN

G:\Projects\2015\20150902\dwg\Construction\20150902_C4-2_DEM.dwg-C4-2 Demolition Plan May 09, 2016 CGrammier

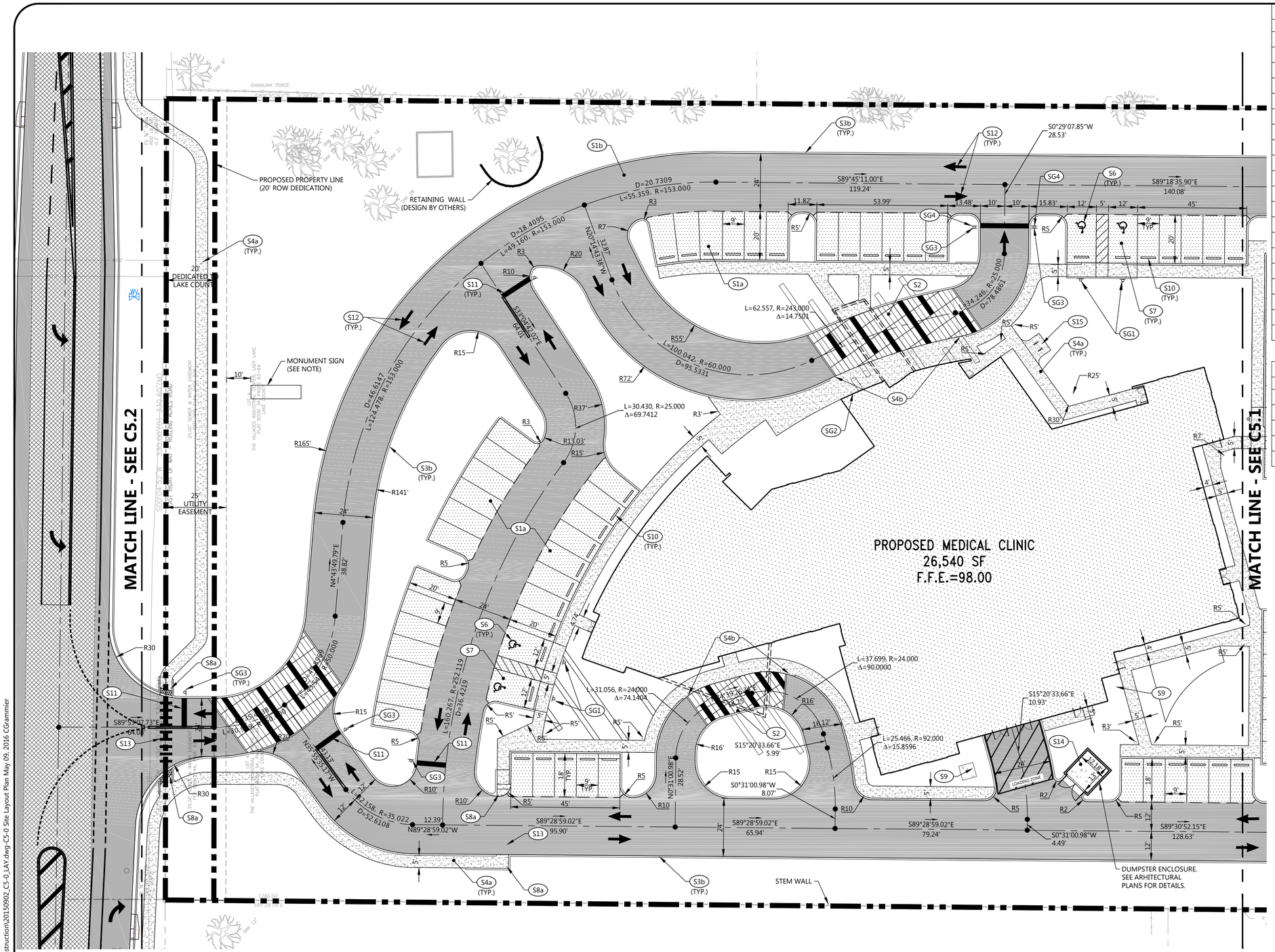

NOTE:
MONUMENT SIGN TO COMPLY WITH TOWN OF LADY LAKE LDC, CHAPTER 17 FOR HEIGHT, SIZE AND DESIGN.

SITE LAYOUT KEYNOTES

CODE	DESCRIPTION	DET #/SHT #
S1a	ASPHALT PAVEMENT - LIGHT DUTY	11/C8.0
S1b	ASPHALT PAVEMENT - HEAVY DUTY	11/C8.0
S1c	ASPHALT PAVEMENT - OVERLAY	
S2	CONCRETE PAVEMENT SEE DETAIL FOR DESIGN	8/C8.0
S3a	FDOT TYPE "F" CURB	INDEX #300
S3b	FDOT TYPE "D" CURB	INDEX #300
S4a	CONCRETE SIDEWALK	2/C8.1
S4b	CONCRETE SIDEWALK WITH TURN DOWN CURB	11/C8.1
S5	SIDEWALK JOINTS	8/C8.1
S6	ACCESSIBLE SYMBOL	10/C8.1
S7	FLORIDA ACCESSIBLE PARKING DETAIL	1/C8.0
S8a	ACCESSIBLE RAMP	12/C8.1
S8b	SIDEWALK TRANSITION	1/C8.2
S9	HEAVY DUTY UTILITY PAD	7/C8.1
S10	CONCRETE WHEELSTOP	5/C8.0
S11	PAINTED STOP BAR - 24"	12/C8.0
S12	DIRECTIONAL ARROWS	10/C8.0
S13	PEDESTRIAN CROSSWALK	9/C8.0
S14	CONCRETE DUMPSTER PAD WITH SCREEN WALL	6/C8.0
S15	BIKE RACK	1/C8.3

SITE SIGNAGE KEYNOTES

CODE	DESCRIPTION	DET #/SHT #
SG1	ACCESSIBLE PARKING SIGN	4/C8.0
SG2	ACCESSIBLE PASSENGER LOADING/UNLOADING SIGN	2/C8.0
SG3	"STOP" SIGN	7/C8.0
SG4	"DO NOT ENTER" SIGN	7/C8.0
SG5	"ONE WAY" SIGN	7/C8.0

PROPOSED FEATURES LEGEND

- BUILDING
- CONCRETE PAVEMENT
- CONCRETE SIDEWALK
- HEAVY DUTY PAVEMENT
- LIGHT DUTY PAVEMENT
- TACTILE WARNING
- PAINTED STRIPE
- CONCRETE CURB
- CENTERLINE

N

811 Know what's below. Call before you dig.

0 10 20 40 60
GRAPHIC SCALE

Littlejohn
An S&ME Company
1615 Edgewater Drive, Suite 200, ORLANDO, FLORIDA 32804
T 407.975.1273 F 407.975.1278 www.leainc.com
Christopher S. Grammier, P.E. 69919
Jay R. Hood FLA LA#0001277
Florida Firm Registration No. 28050

SPR GROUP OF FLORIDA, INC.
913 VENTURE AVENUE, SUITE #1
LEESBURG, FL 34748
(352) 801-7992

PERMIT DOCUMENTS
SPRG LADY LAKE - OUTPATIENT CLINICAL BUILDING
LADY LAKE, LAKE COUNTY, FLORIDA

NO.	DATE	DESCRIPTION	BY	CHK	APV
1	3/21/16	LADY LAKE SUBMITTAL	CV	GH	CG

PROJECT NUMBER
20150902

DRAWING NUMBER
C5.0

DRAWING NAME
SITE LAYOUT PLAN

G:\Projects\2015\20150902\dwg\Construction\20150902_C5-0_LAY.dwg C5-0 Site Layout Plan May 09, 2016 CGrammier

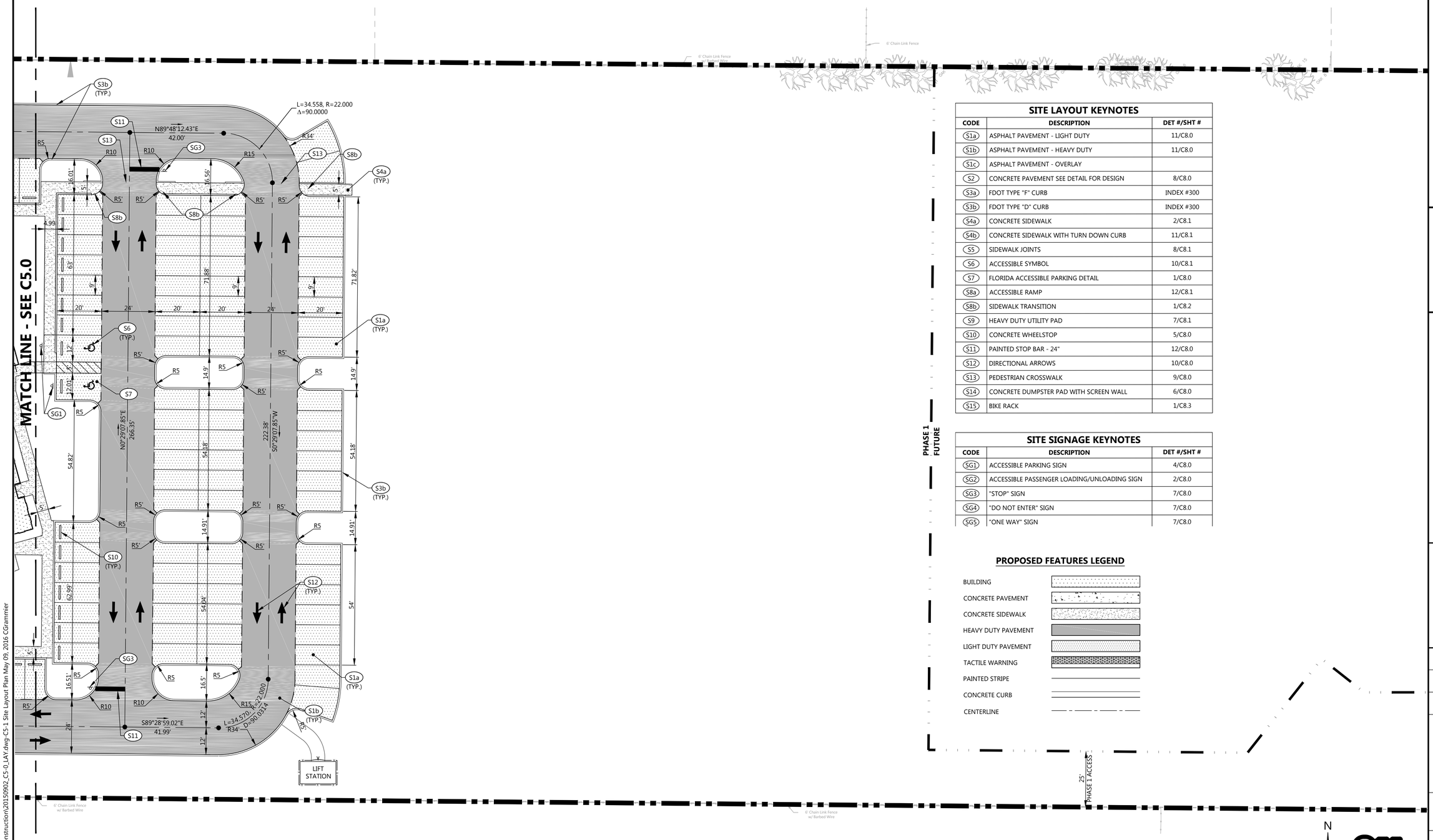

SITE LAYOUT KEYNOTES

CODE	DESCRIPTION	DET #/SHT #
S1a	ASPHALT PAVEMENT - LIGHT DUTY	11/C8.0
S1b	ASPHALT PAVEMENT - HEAVY DUTY	11/C8.0
S1c	ASPHALT PAVEMENT - OVERLAY	
S2	CONCRETE PAVEMENT SEE DETAIL FOR DESIGN	8/C8.0
S3a	FDOT TYPE "F" CURB	INDEX #300
S3b	FDOT TYPE "D" CURB	INDEX #300
S4a	CONCRETE SIDEWALK	2/C8.1
S4b	CONCRETE SIDEWALK WITH TURN DOWN CURB	11/C8.1
S5	SIDEWALK JOINTS	8/C8.1
S6	ACCESSIBLE SYMBOL	10/C8.1
S7	FLORIDA ACCESSIBLE PARKING DETAIL	1/C8.0
S8a	ACCESSIBLE RAMP	12/C8.1
S8b	SIDEWALK TRANSITION	1/C8.2
S9	HEAVY DUTY UTILITY PAD	7/C8.1
S10	CONCRETE WHEELSTOP	5/C8.0
S11	PAINTED STOP BAR - 24"	12/C8.0
S12	DIRECTIONAL ARROWS	10/C8.0
S13	PEDESTRIAN CROSSWALK	9/C8.0
S14	CONCRETE DUMPSTER PAD WITH SCREEN WALL	6/C8.0
S15	BIKE RACK	1/C8.3

SITE SIGNAGE KEYNOTES

CODE	DESCRIPTION	DET #/SHT #
SG1	ACCESSIBLE PARKING SIGN	4/C8.0
SG2	ACCESSIBLE PASSENGER LOADING/UNLOADING SIGN	2/C8.0
SG3	"STOP" SIGN	7/C8.0
SG4	"DO NOT ENTER" SIGN	7/C8.0
SG5	"ONE WAY" SIGN	7/C8.0

PROPOSED FEATURES LEGEND

- BUILDING
- CONCRETE PAVEMENT
- CONCRETE SIDEWALK
- HEAVY DUTY PAVEMENT
- LIGHT DUTY PAVEMENT
- TACTILE WARNING
- PAINTED STRIPE
- CONCRETE CURB
- CENTERLINE

N

Know what's below. Call before you dig.

0 10 20 40 60
GRAPHIC SCALE

Littlejohn
An S&ME Company
1615 Edgewater Drive, Suite 200, ORLANDO, FLORIDA 32804
T 407.975.1273 F 407.975.1278 www.leainc.com
Christopher S. Grammier, P.E. 69919
Jay R. Hood PLA LA0001277
Florida Firm Registration No. 28050

SPR GROUP OF FLORIDA, INC.
913 VENTURE AVENUE, SUITE #1
LEESBURG, FL 34748
(352) 801-7992

PERMIT DOCUMENTS
SPRG LADY LAKE - OUTPATIENT CLINICAL BUILDING
LADY LAKE, LAKE COUNTY, FLORIDA

NO.	DATE	DESCRIPTION	BY	CHK	APV
1	3/21/16	LADY LAKE SUBMITTAL	CV	GH	CG

PROJECT NUMBER
20150902

DRAWING NUMBER
C5.1

DRAWING NAME
SITE LAYOUT PLAN

G:\Projects\2015\20150902\dwg\Construction\20150902_C5-0_LAY.dwg-C5-1 Site Layout Plan May 09, 2016 CGrammier

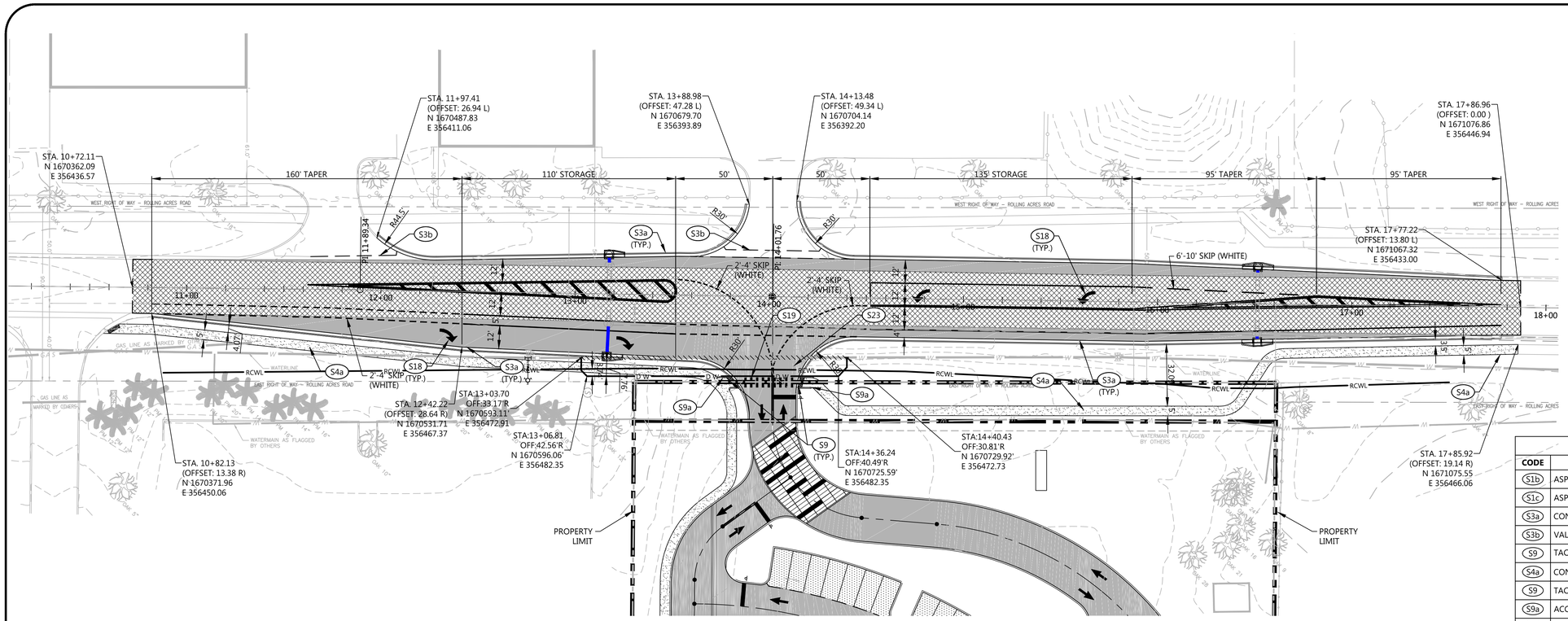

SITE LAYOUT KEYNOTES

CODE	DESCRIPTION	DET #/SHT #
S1b	ASPHALT PAVEMENT - HEAVY DUTY	11 / C8.0
S1c	ASPHALT PAVEMENT - OVERLAY	
S3a	CONCRETE CURB & GUTTER - TYPE F	FDOT INDEX 300
S3b	VALLEY GUTTER	FDOT INDEX 300
S9	TACTILE WARNING SURFACE (C.I.P.)	FDOT INDEX 304
S4a	CONCRETE SIDEWALK	FDOT INDEX 310
S9	TACTILE WARNING SURFACE	FDOT INDEX 304
S9a	ACCESSIBLE RAMP	12 / C8.1
S18	DIRECTIONAL ARROWS	10 / C8.0
S19	PEDESTRIAN CROSSWALK	9 / C8.0
S23	PAINTED STOP BAR	12 / C8.0

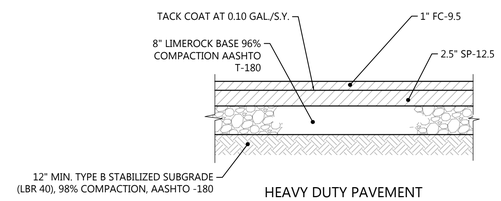

HEAVY DUTY PAVEMENT

NOTE:

1. ON ALL EXISTING PAVEMENT REPAIR OR REPLACEMENT USE THE PAVEMENT SECTION SHOWN ABOVE OR MATCH THE EXISTING SECTION, WHICHEVER IS GREATER.
2. ON EXISTING PAVEMENT, MILL TOP 1" EX. ASPHALT, OVERLAY ENTIRE ROADWAY WIDTH SAME LIFT

ASPHALT PAVEMENT

NO SCALE

PROPOSED FEATURES LEGEND

- MILL AND OVERLAY
- CONCRETE SIDEWALK
- HEAVY DUTY PAVEMENT
- PAINTED STRIPE
- CONCRETE CURB
- CENTERLINE

NOTES:

1. PAVEMENT MARKINGS TO BE PER FDOT INDEX 17346
2. BICYCLE LANE MARKINGS TO BE PER FDOT INDEX 17347.

811 Know what's below. Call before you dig.

N

GRAPHIC SCALE 0 15 30 60 90

Littlejohn
An S&ME Company
1615 Edgewater Drive, Suite 200, ORLANDO, FLORIDA 32804
T 407.975.1273 F 407.975.1278 www.leainc.com
Christopher S. Grammier, P.E. 69919
Jay R. Hood PLA LA0001277
Florida Firm Registration No. 28050

SPR GROUP OF FLORIDA, INC.
913 VENTURE AVENUE, SUITE #1
LEESBURG, FL 34748
(352) 801-7992

PERMIT DOCUMENTS

SPRG LADY LAKE - OUTPATIENT CLINICAL BUILDING

LADY LAKE, LAKE COUNTY, FLORIDA

NO.	DATE	DESCRIPTION	BY	CHK	APV
1	3/21/16	LADY LAKE SUBMITTAL	CV	GH	CG

PROJECT NUMBER
20150902

DRAWING NUMBER
C5.2

DRAWING NAME
TURN LANES

G:\Projects\2015\20150902\dwg\Construction\20150902_C5-2_LAY.dwg-C5-2 Turn Lanes May 09, 2016 CGrammier

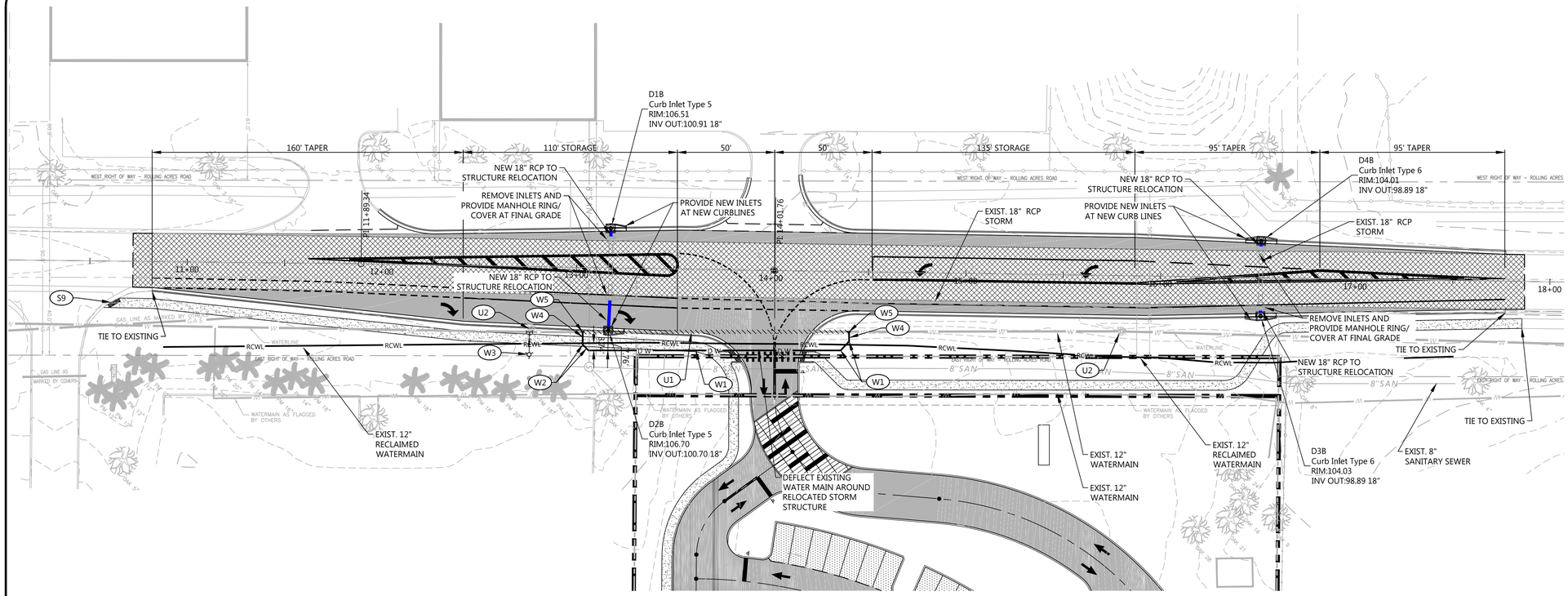

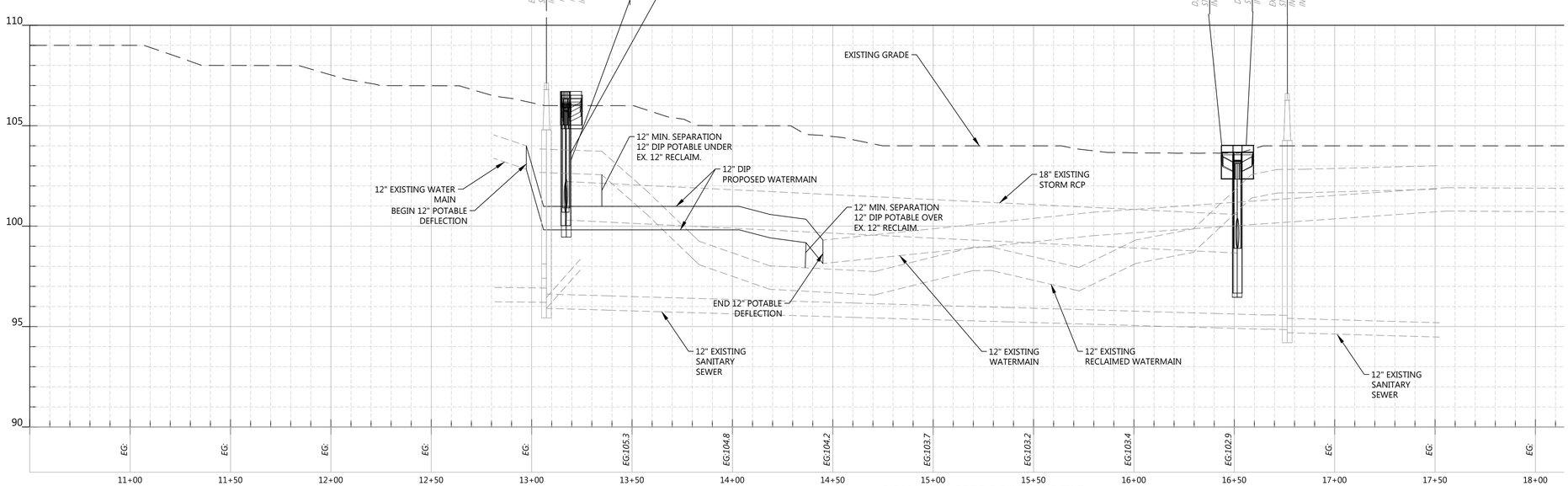

ROLLING ACRES ROAD PROFILE

SCALE H:1"=30'; V:1"=3'

STRUCTURE TABLE		
CODE	DESCRIPTION	TOP GRATE
D-1	MANHOLE - TYPE J8 (EX.)	104.84
D-2	MANHOLE - TYPE J8 (EX.)	105.36
D-3	MANHOLE - TYPE J8 (EX.)	103.22
D-5	CURB INLET TYPE 5	108.98
D-7	CURB INLET TYPE 5	105.67
D1b	CURB INLET TYPE 5	106.51
D2b	CURB INLET TYPE 5	106.70
D3b	CURB INLET TYPE 6	104.03
D4	MANHOLE - TYPE J8 (EX.)	103.27
D4b	CURB INLET TYPE 6	104.01

PIPE TABLE					
NAME	DIA.	APPROX. LENGTH	SLOPE	START STR.	END STR.
PIPE-(1)(EX.)	18"	336'	0.21%	D-3	D-5
PIPE-(6)(EX.)	18"	334'	0.49%	D-2	D-3
PIPE-(7)(EX.)	18"	30'	0.00%	D4	D-3
PIPE-(8)(EX.)	18"	30'	0.91%	D-1	D-2
PIPE-1	18"	6'	0.50%	D1b	D-1
PIPE-2	18"	17'	0.50%	D2b	D-2
PIPE-3	18"	5'	0.50%	D3b	D-3
PIPE-4	18"	4'	0.50%	D4b	D4

UTILITY KEYNOTES		
CODE	DESCRIPTION	DET #/SHT #
U1	EXISTING WATERMAIN TO BE REMOVED	-
U2	EX. FIRE HYDRANT	-
W1	12" DIP WATERMAIN	-
W2	12" 45° BEND	-
W3	RELOCATE FIRE HYDRANT	-
W4	GATE VALVE	-
W5	12" X 12" TAPPING SADDLE	-

OFFSITE UTILITY WORK ON THESE SHEETS TO BE PER LADY LAKE PUBLIC WORKS REQUIREMENTS. DETAILS SHEETS C9.4 - C9.6

PROPOSED FEATURES LEGEND

- MILL AND OVERLAY
- CONCRETE SIDEWALK
- HEAVY DUTY PAVEMENT
- PAINTED STRIPE
- CONCRETE CURB
- CENTERLINE

Know what's below. Call before you dig.

GRAPHIC SCALE 0 15 30 60 90

Littlejohn
An S&ME Company
1615 Edgewater Drive, Suite 200, ORLANDO, FLORIDA 32804
T 407.975.1273 F 407.975.1278 www.leainc.com
Christopher S. Grammier, P.E. 69919
Jay R. Hood PLA LA0001277
Florida Firm Registration No. 28050

SPR GROUP OF FLORIDA, INC.
913 VENTURE AVENUE, SUITE #1
LEESBURG, FL 34748
(352) 801-7992

PERMIT DOCUMENTS

SPRG LADY LAKE - OUTPATIENT CLINICAL BUILDING

LADY LAKE, LAKE COUNTY, FLORIDA

NO.	DATE	DESCRIPTION	BY	CHK	APV
1	3/21/16	LADY LAKE SUBMITTAL	CV	GH	CG

PROJECT NUMBER 20150902

DRAWING NUMBER C5.3

DRAWING NAME TURN LANES

G:\Projects\2015\20150902\dwg\Construction\20150902_C5-2_LAY.dwg-C5-3 Turn Lanes May 09, 2016 CGrammier

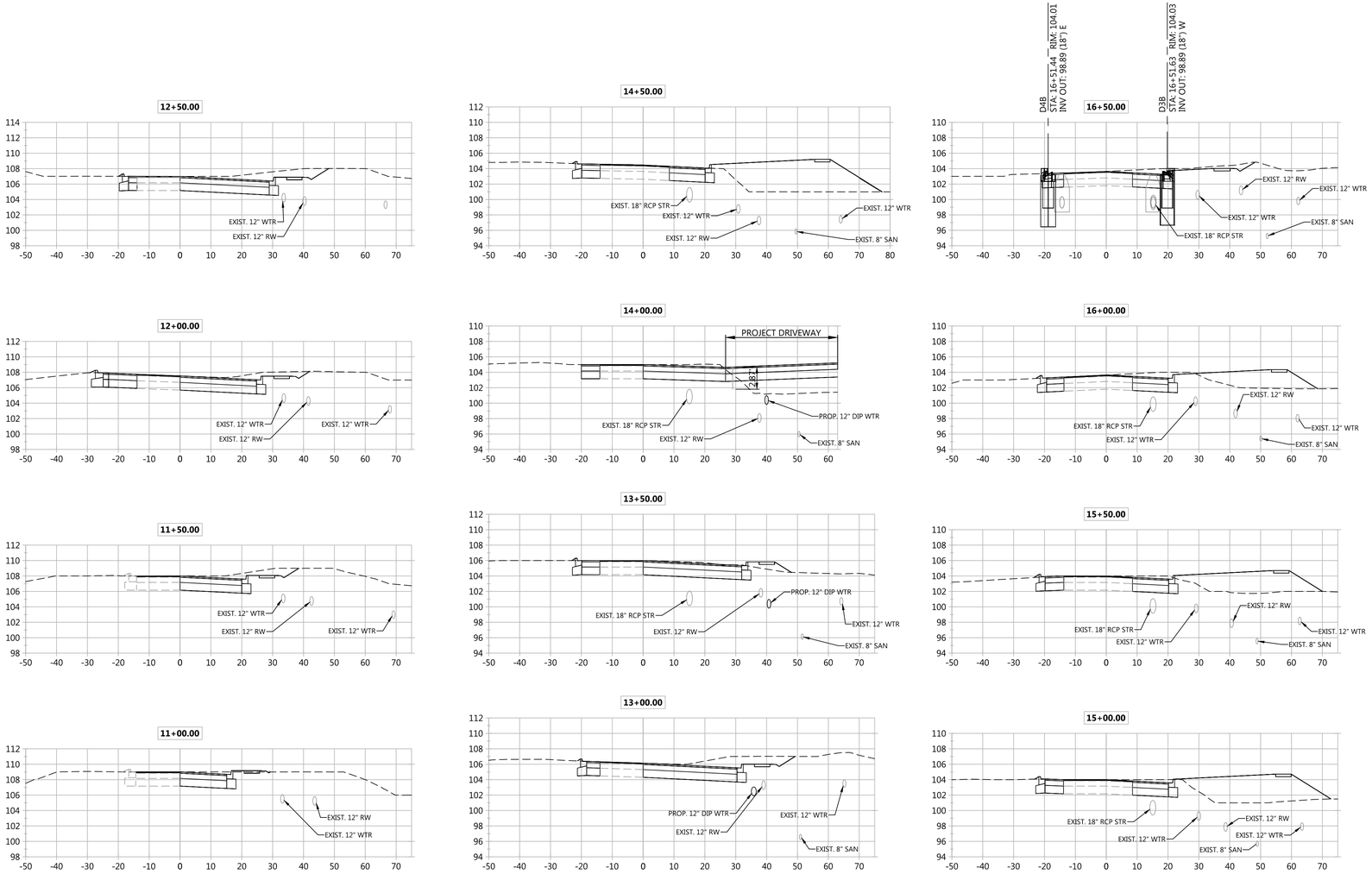

Know what's below.
Call before you dig.

0 10 20 40 60
GRAPHIC SCALE

Littlejohn
An S&ME Company
1615 Edgewater Drive, Suite 200, ORLANDO, FLORIDA 32804
T 407.975.1273 F 407.975.1278 www.leainc.com
Christopher S. Grammier, P.E. 69919
Jay R. Hood PLA LA0001277
Florida Firm Registration No. 28050

SPR GROUP OF FLORIDA, INC.
913 VENTURE AVENUE, SUITE #1
LEESBURG, FL 34748
(352) 801-7992

PERMIT DOCUMENTS

SPRG LADY LAKE - OUTPATIENT CLINICAL BUILDING

LADY LAKE, LAKE COUNTY, FLORIDA

NO.	DATE	DESCRIPTION	BY	CHK	APV
1	3/21/16	LADY LAKE SUBMITTAL	CV	GH	CG

PROJECT NUMBER
20150902

DRAWING NUMBER
C5-4

DRAWING NAME
TURN LANES

G:\Projects\2015\20150902\dwg\Construction\20150902_C5-2_LAY.dwg-C5-4 Turn Lanes May 09, 2016 CGrammier

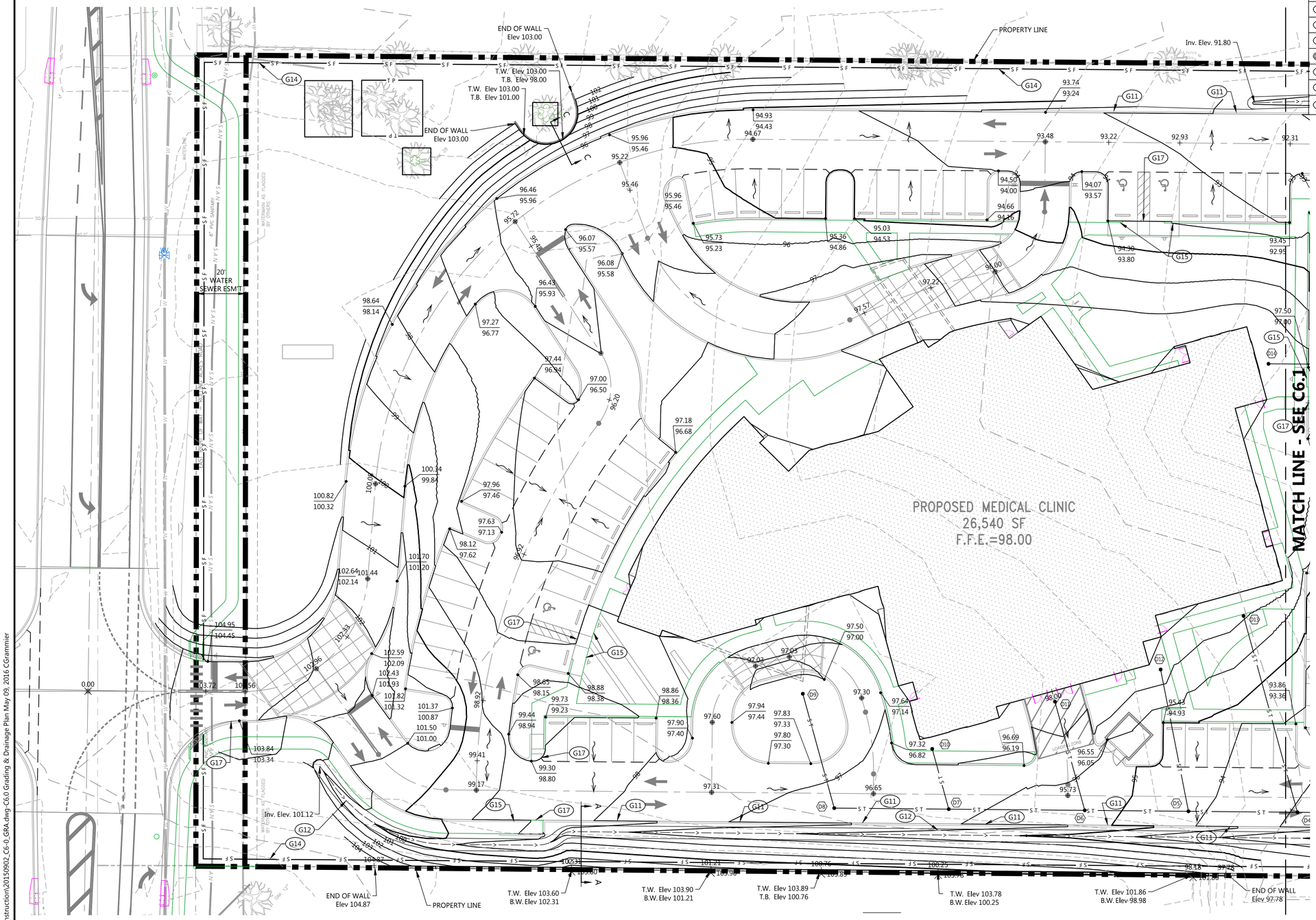

GRADING & DRAINAGE KEYNOTES

CODE	DESCRIPTION	DET #/SHT #
G8	CONCRETE FLUME	C8.3
G11	CURB CUT	
G12	ENVIRONMENTAL SWALE 5.0 FEET WIDE	
G13	SPREADER SWALE	
G13a	SWALE TRANSITION 13.0 FEET	
G14	SILT FENCE	
G15	FLUSH CONDITION	
G17	TRANSITION FROM FLUSH CONDITION TO 6" CURB OVER 12.5 FEET	

PROPOSED FEATURES LEGEND

SPOT ELEVATION	+ 91.8
PROPOSED CONTOUR	90
SILT FENCE	SF
TREE PROTECTION	T P
STORM PIPE	S T

Littlejohn
An S&ME Company
1615 Edgewater Drive, Suite 200, ORLANDO, FLORIDA 32804
T 407.975.1273 F 407.975.1278 www.leainc.com
Christopher S. Grammier, P.E. 69919
Jay R. Hood PLA LA0001277
Florida Firm Registration No. 28050

SPR GROUP OF FLORIDA, INC.
913 VENTURE AVENUE, SUITE #1
LEESBURG, FL 34748
(352) 801-7992

PERMIT DOCUMENTS

SPRG LADY LAKE - OUTPATIENT CLINICAL BUILDING

LADY LAKE, LAKE COUNTY, FLORIDA

NO.	DATE	DESCRIPTION	BY	CHK	APV
1	3/21/16	LADY LAKE SUBMITTAL	CV	GH	CG

PROJECT NUMBER
20150902

DRAWING NUMBER
C6.0

DRAWING NAME
GRADING & DRAINAGE PLAN

N

Know what's below. Call before you dig.

0 10 20 40 60
GRAPHIC SCALE

G:\Projects\2015\20150902\dwg\Construction\20150902_C6-0_GRA.dwg-C6.0 Grading & Drainage Plan May 09, 2016 CGrammier

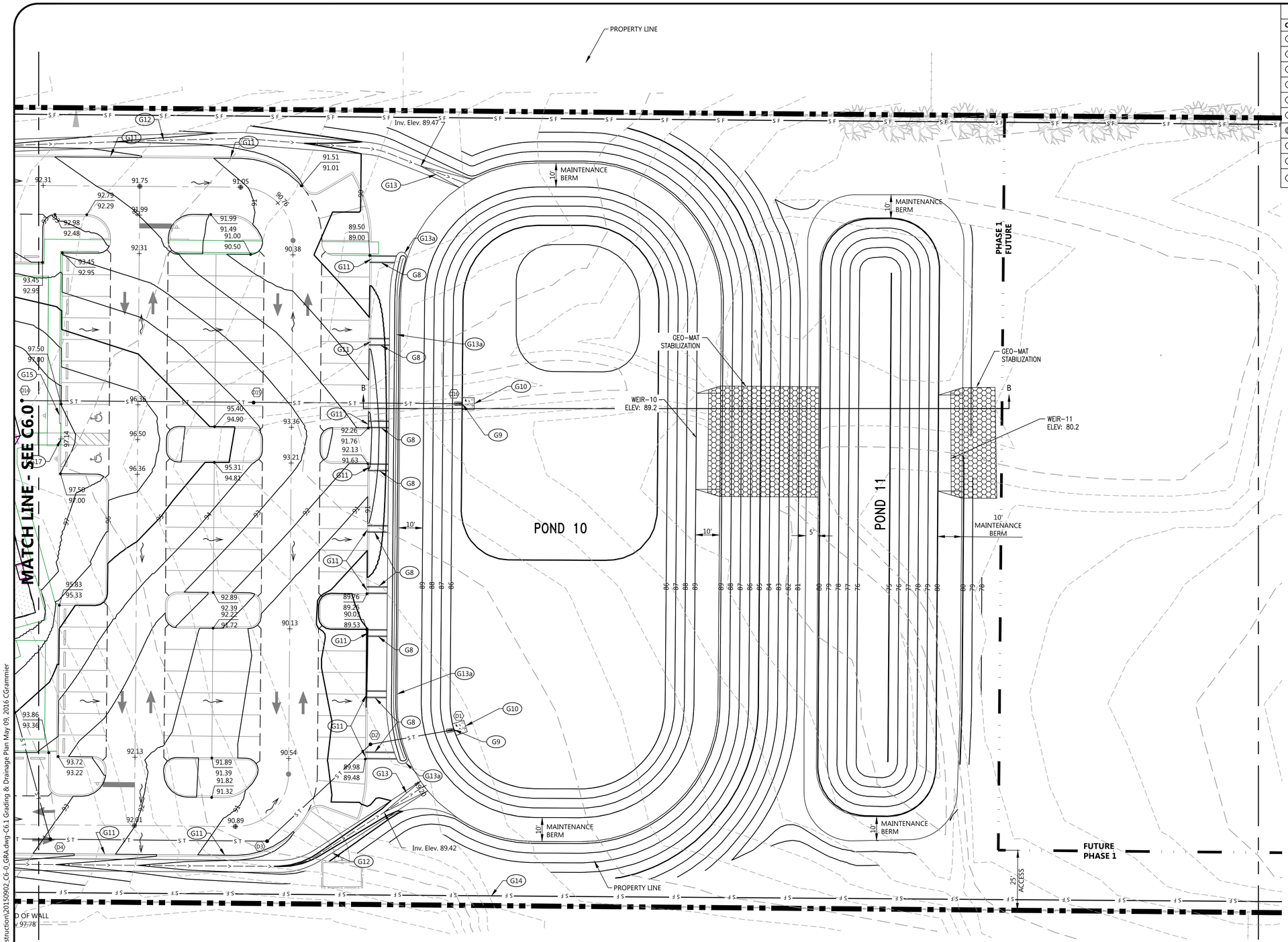

GRADING & DRAINAGE KEYNOTES

CODE	DESCRIPTION	DET #/SHT #
G8	CONCRETE FLUME	
G9	MITERED END SECTION	6 / C8.2
G10	CONCRETE SPLASH PAD	7 / C8.2
G11	CURB CUT	
G12	ENVIRONMENTAL SWALE 5.0 FEET WIDE	
G13	SPREADER SWALE	
G13a	SWALE TRANSITION 13.0 FEET	
G14	SILT FENCE	C3.0 & C3.1
G15	FLUSH CONDITION	
G17	TRANSITION FROM FLUSH CONDITION TO 6" CURB OVER 12.5 FEET	

PROPOSED FEATURES LEGEND

SPOT ELEVATION	+ 91.8
PROPOSED CONTOUR	90
SILT FENCE	SF
TREE PROTECTION	T P
STORM PIPE	S T

Littlejohn
An S&ME Company
1615 Edgewater Drive, Suite 200, ORLANDO, FLORIDA 32804
T 407.975.1273 F 407.975.1278 www.leainc.com
Christopher S. Grammier, P.E. 69919
Jay R. Hood PLA LA0001277
Florida Firm Registration No. 28050

SPR GROUP OF FLORIDA, INC.
913 VENTURE AVENUE, SUITE #1
LEESBURG, FL 34748
(352) 801-7992

PERMIT DOCUMENTS

SPRG LADY LAKE - OUTPATIENT CLINICAL BUILDING

LADY LAKE, LAKE COUNTY, FLORIDA

NO.	DATE	DESCRIPTION	BY	CHK	APV
1	3/21/16	LADY LAKE SUBMITTAL	CV	GH	CG

PROJECT NUMBER
20150902

DRAWING NUMBER
C6.1

DRAWING NAME
GRADING & DRAINAGE PLAN

N

Know what's below. Call before you dig.

0 10 20 40 60
GRAPHIC SCALE

G:\Projects\2015\20150902\dwg\Construction\20150902_C6-0_GRA.dwg-C6.1 Grading & Drainage Plan May 09, 2016 CGrammier

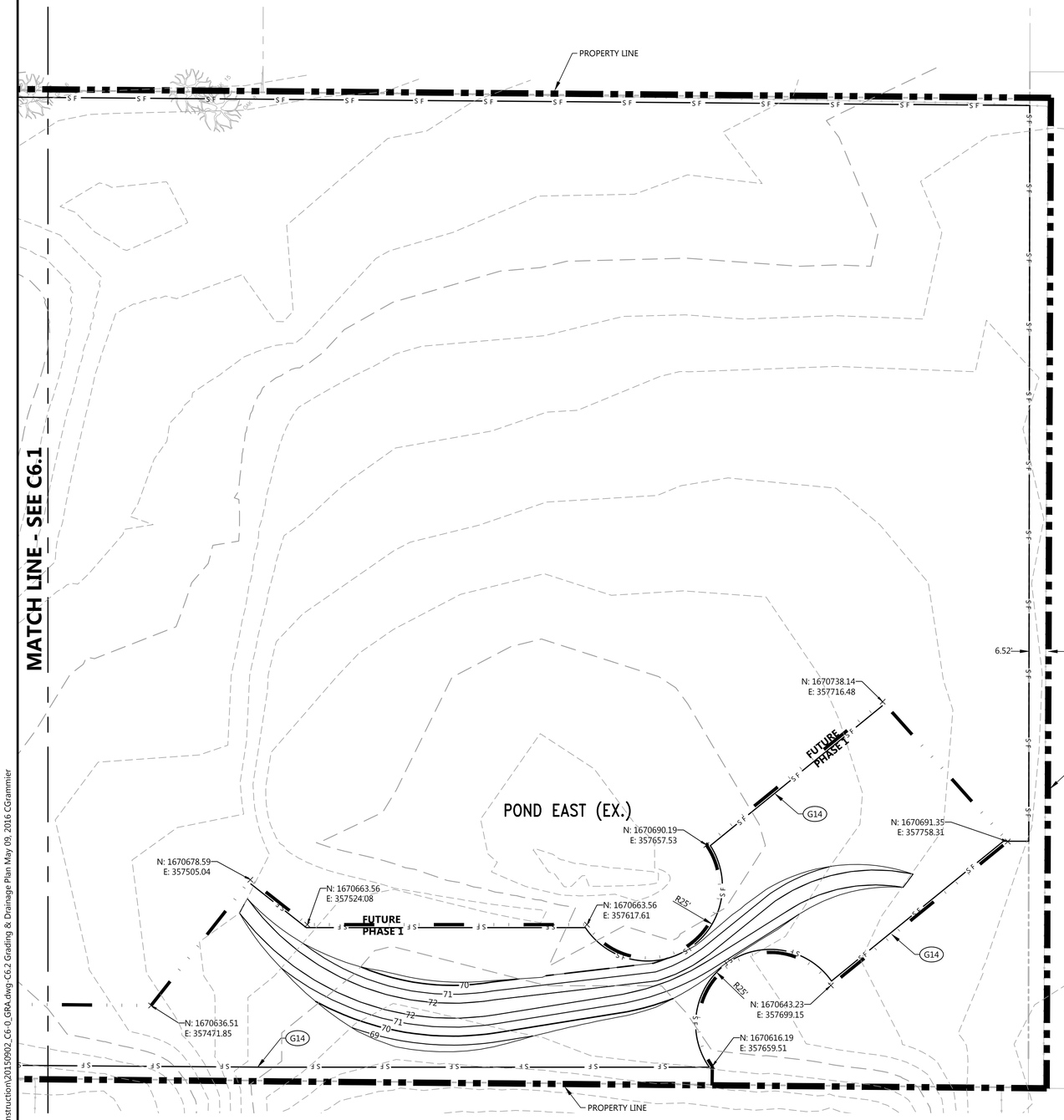

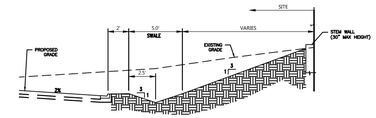

CROSS SECTION A

NOT TO SCALE

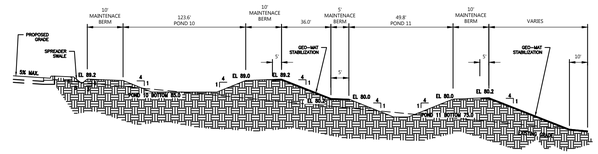

CROSS SECTION B

NOT TO SCALE

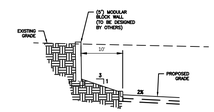

CROSS SECTION C

NOT TO SCALE

NOTES:

1. CONTRACTOR TO SOD POND SIDE SLOPES WITH NON-MUCK GROWN SOD ONLY. POND BOTTOM TO BE SEEDED AND MULCHED.
2. CONTRACTOR TO AVOID OPERATING MACHINERY ON POND BOTTOMS AS MUCH AS POSSIBLE DURING CONSTRUCTION PROCESS.

GRADING & DRAINAGE KEYNOTES

CODE	DESCRIPTION	DET #/SHT #
G8	CONCRETE FLUME	
G9	MITERED END SECTION	6 / C8.2
G10	CONCRETE SPLASH PAD	7 / C8.2
G11	CURB CUT	
G12	ENVIRONMENTAL SWALE 5.0 FEET WIDE	
G13	SPREADER SWALE	
G13a	SWALE TRANSITION 13.0 FEET	
G14	SILT FENCE	C3.0 & C3.1
G15	FLUSH CONDITION	
G17	TRANSITION FROM FLUSH CONDITION TO 6" CURB OVER 12.5 FEET	

PROPOSED FEATURES LEGEND

SPOT ELEVATION	+ 91.8
PROPOSED CONTOUR	90
SILT FENCE	SF
TREE PROTECTION	T P
STORM PIPE	S T

PROPOSED STORM SEWER STRUCTURE TABLE

CODE	STRUCTURE DESCRIPTION	DETAIL	DEPTH	ELEVATION	
				TOP	INVERT
D1	12" MES	6 / C8.2	--	--	86.00
D2	CLEANOUT / DOWNSPOUT BOOT	1 / C8.2	3.55	89.90	86.35
D3	CLEANOUT / DOWNSPOUT BOOT	1 / C8.2	3.69	90.63	86.94
D4	CLEANOUT / DOWNSPOUT BOOT	1 / C8.2	5.07	92.91	87.84
D5	CLEANOUT / DOWNSPOUT BOOT	1 / C8.2	5.93	94.21	88.28
D6	CLEANOUT / DOWNSPOUT BOOT	1 / C8.2	6.74	95.44	88.70
D7	CLEANOUT / DOWNSPOUT BOOT	1 / C8.2	6.93	96.18	89.25
D8	CLEANOUT / DOWNSPOUT BOOT	1 / C8.2	6.97	96.69	89.72
D9	CLEANOUT / DOWNSPOUT BOOT	1 / C8.2	4.48	97.48	93.00
D10	CLEANOUT / DOWNSPOUT BOOT	1 / C8.2	4.50	97.60	93.10
D11	CLEANOUT / DOWNSPOUT BOOT	1 / C8.2	4.52	97.77	93.25
D12	CLEANOUT / DOWNSPOUT BOOT	1 / C8.2	4.46	97.46	93.00
D13	CLEANOUT / DOWNSPOUT BOOT	1 / C8.2	4.50	97.10	92.60
D14	CLEANOUT / DOWNSPOUT BOOT	1 / C8.2	4.50	97.80	93.30
D15	CLEANOUT / DOWNSPOUT BOOT	1 / C8.2	5.52	94.44	88.92
D16	12" MES	6 / C8.2	--	--	85.00

PROPOSED STORM SEWER PIPE TABLE

FROM		TO		GRADE	DIAMETER (IN)	TYPE	LENGTH (L.F.)
CODE	INV.	CODE	INV.				
D2	86.35	D1	86.00	1.00%	12	PVC	35
D3	86.94	D2	86.35	1.00%	12	PVC	59
D4	87.84	D3	86.94	1.00%	12	PVC	90
D5	88.28	D4	87.84	1.00%	12	PVC	44
D6	88.70	D5	88.28	1.00%	12	PVC	42
D7	89.25	D6	88.70	1.00%	12	PVC	55
D8	89.72	D7	89.25	1.00%	12	PVC	47
D9	93.00	D8	89.72	6.83%	8	PVC	48
D10	93.10	D7	92.71	1.50%	6	PVC	26
D11	93.25	D6	92.33	2.00%	6	PVC	46
D12	93.00	D5	91.82	2.00%	8	PVC	59
D13	92.60	D4	90.94	2.00%	8	PVC	83
D14	93.30	D15	88.92	4.52%	12	PVC	97
D15	88.92	D16	85.00	4.51%	12	PVC	87

N

Know what's below. Call before you dig.

0 10 20 40 60

GRAPHIC SCALE

Littlejohn
An S&ME Company
1615 Edgewater Drive, Suite 200, ORLANDO, FLORIDA 32804
T 407.975.1273 F 407.975.1278 www.leainc.com
Christopher S. Grammier, P.E. 69919
Jay R. Hood PLA LA0001277
Florida Firm Registration No. 28050

SPR GROUP OF FLORIDA, INC.
913 VENTURE AVENUE, SUITE #1
LEESBURG, FL 34748
(352) 801-7992

PERMIT DOCUMENTS
SPRG LADY LAKE - OUTPATIENT CLINICAL BUILDING
LADY LAKE, LAKE COUNTY, FLORIDA

NO.	DATE	DESCRIPTION	BY	CHK	APV
1	3/21/16	LADY LAKE SUBMITTAL	CV	GH	CG

PROJECT NUMBER
20150902

DRAWING NUMBER
C6.2

DRAWING NAME
GRADING & DRAINAGE PLAN

G:\Projects\2015\20150902\dwg\Construction\20150902_C6-0_GRA.dwg-C6.2 Grading & Drainage Plan May 09, 2016 CGrammier

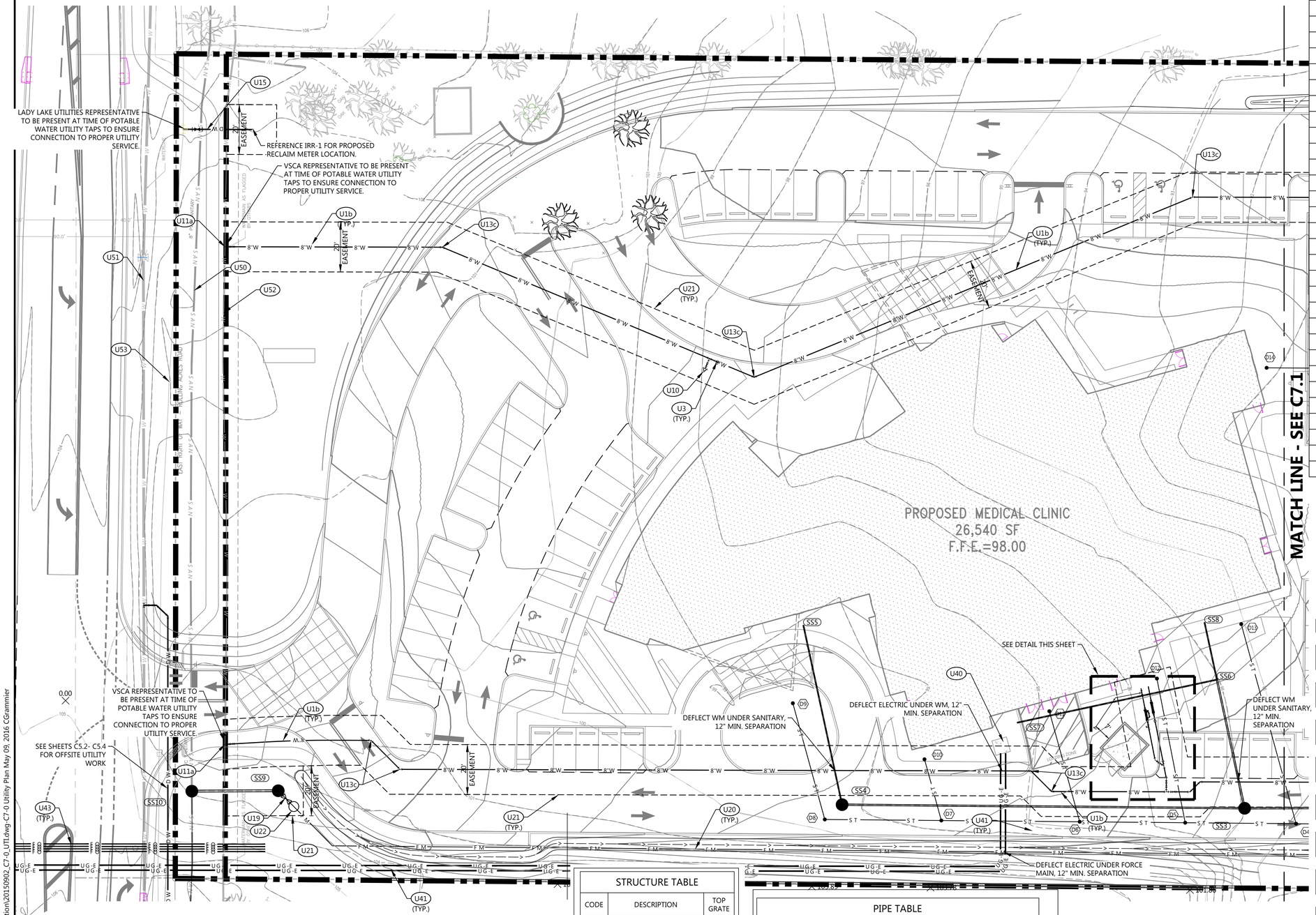

UTILITY KEYNOTES

CODE	DESCRIPTION	DET #/SHT #
U1a	2.5" PVC WATER LINE	
U1b	8" PVC WATER LINE	
U2a	4" PVC FIRE LINE	
U3	GATE VALVE	
U4	2" WATER METER	W26 / C9.0
U5	2" REDUCED PRESSURE BACKFLOW PREVENTER	W51 / C9.0
U6	4" DOUBLE DETECTOR CHECK VALVE ASSEMBLY	4 / C8.2
U8	POST INDICATOR VALVE	2 / C8.2
U9	FIRE DEPARTMENT CONNECTION	5 / C8.2
U10	FIRE HYDRANT ASSEMBLY	3 / C8.2
U11a	12" TAPPING SLEEVE AND VALVE	
U12b	8" x 8" TEE	
U12c	8" x 6" TEE	
U12d	4" x 4" TEE	
U13a	8" x 2.5" REDUCER	
U13b	8" x 4" REDUCER	
U13c	45° BEND (SEE LINE FOR SIZE)	
U14	8" WYE	
U15	2-1/2" PVC RECLAIM LINE	
U19	PLUG VALVE	
U20	SANITARY FORCEMAIN	
U21	UTILITY EASEMENT	
U22	AIR RELEASE VALVE	
U40	ELECTRIC TRANSFORMER	
U41	UNDERGROUND ELECTRIC LINE	
U43	UNDERGROUND COMMUNICATION LINE	
U45	SITE LIGHTING	
U50	VCSA GRAVITY SANITARY SEWER LINE (EX.)	--
U51	LADY LAKE UTILITIES 12" POTABLE LINE (EX.)	--
U52	VCSA 12" POTABLE LINE (EX.)	--
U53	LADY LAKE UTILITIES 12" RECLAIM LINE (EX.)	--

PROPOSED FEATURES LEGEND

- WATER LINE (SEE LINE FOR SIZE) — W
- GAS LINE — GAS
- WATER LINE (WITH 45° BEND)
- SANITARY SEWER LINE WITH CLEANOUT
- NEW FIRE HYDRANT
- UNDERGROUND ELECTRIC — UGE — UGE

STRUCTURE TABLE

CODE	DESCRIPTION	TOP GRATE
LS1	36" WETWELL	94.88
SS2	48" MANHOLE	90.83
SS3	48" MANHOLE	93.64
SS4	48" MANHOLE	96.74
SS5	6" CLEANOUT	97.75
SS6	6" CLEANOUT	96.08
SS7	6" CLEANOUT	97.78
SS8	6" CLEANOUT	97.64
SS9	48" MANHOLE	102.35
SS10	48" DOGHOUSE MANHOLE	102.80

PIPE TABLE

FROM	START INVERT	TO	END INVERT	DIA.	MATERIAL	APPROX. LENGTH	SLOPE
SS2	88.95	LS1	88.60	6"	PVC	45'	0.77%
SS3	89.99	SS2	89.05	6"	PVC	105'	0.90%
SS4	91.54	SS3	90.09	6"	PVC	161'	0.90%
SS5	92.30	SS4	91.64	4"	PVC	73'	0.90%
SS6	91.01	SS3	90.09	6"	PVC	53'	1.75%
SS7	92.30	SS6	91.11	4"	PVC	82'	1.46%
SS8	92.30	SS6	91.84	4"	PVC	23'	2.00%
SS9	96.65	SS10	96.41	8"	DIP	35'	0.70%

Know what's below. Call before you dig.

0 10 20 40 60
GRAPHIC SCALE

N

Littlejohn
An S&ME Company
1615 Edgewater Drive, Suite 200, ORLANDO, FLORIDA 32804
T 407.975.1273 F 407.975.1278 www.leainc.com
Christopher S. Grammier, P.E. 69919
Jay R. Hood PLA LA#001277
Florida Firm Registration No. 28050

SPR GROUP OF FLORIDA, INC.
913 VENTURE AVENUE, SUITE #1
LEESBURG, FL 34748
(352) 801-7992

PERMIT DOCUMENTS

SPRG LADY LAKE - OUTPATIENT CLINICAL BUILDING

LADY LAKE, LAKE COUNTY, FLORIDA

NO.	DATE	DESCRIPTION	BY	CHK	APV
1	3/21/16	LADY LAKE SUBMITTAL	CV	GH	CG

PROJECT NUMBER
20150902

DRAWING NUMBER
C7.0

DRAWING NAME
UTILITY PLAN

G:\Projects\2015\20150902\dwg\Construction\20150902_C7-0_UTLdwg-C7-0 Utility Plan May 09, 2016 CGrammier

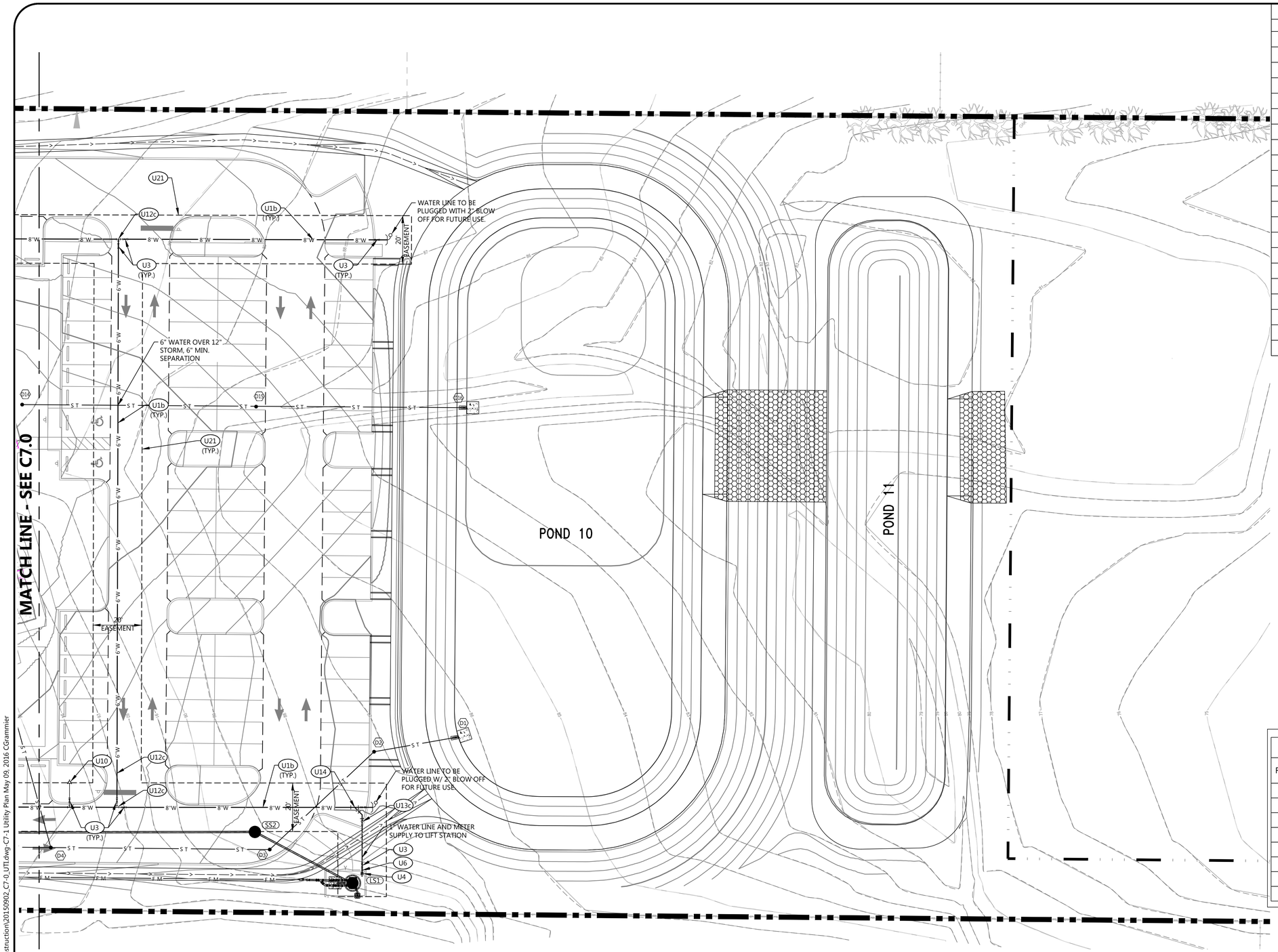

UTILITY KEYNOTES

CODE	DESCRIPTION	DET #/SHT #
U1a	2.5" PVC WATER LINE	
U1b	8" PVC WATER LINE	
U3	GATE VALVE	
U4a	1" WATER METER	W26 / C9.0
U5	REDUCED PRESSURE BACKFLOW PREVENTER	W51 / C9.0
U6	DOUBLE DETECTOR CHECK VALVE ASSEMBLY	4 / C8.2
U8	POST INDICATOR VALVE	2 / C8.2
U9	FIRE DEPARTMENT CONNECTION	5 / C8.2
U10	FIRE HYDRANT ASSEMBLY	3 / C8.2
U11a	12" TAPPING SLEEVE AND VALVE	
U12b	8" x 8" TEE	
U12c	8" x 6" TEE	
U12d	4" x 4" TEE	
U13c	8" x 1" REDUCER	
U14	8" WYE	
U20	SANITARY FORCEMAIN	
U21	UTILITY EASEMENT	
U40	ELECTRIC TRANSFORMER	
U41	UNDERGROUND ELECTRIC LINE	
U43	UNDERGROUND COMMUNICATION LINE	
U45	SITE LIGHTING	

PROPOSED FEATURES LEGEND

WATER LINE (SEE LINE FOR SIZE) — W
GAS LINE — GAS
WATER LINE (WITH 45° BEND)
SANITARY SEWER LINE WITH CLEANOUT
NEW FIRE HYDRANT
UNDERGROUND ELECTRIC — UGE

STRUCTURE TABLE

CODE	DESCRIPTION	TOP GRATE
LS1	36" WETWELL	94.88
SS2	48" MANHOLE	90.83
SS3	48" MANHOLE	93.64
SS4	48" MANHOLE	96.74
SS5	6" CLEANOUT	97.75
SS6	6" CLEANOUT	96.08
SS7	6" CLEANOUT	97.78
SS8	6" CLEANOUT	97.64
SS9	48" MANHOLE	102.35
SS10	48" DOGHOUSE MANHOLE	102.80

PIPE TABLE

FROM	START INVERT	TO	END INVERT	DIA.	MATERIAL	APPROX. LENGTH	SLOPE
SS2	88.95	LS1	88.60	6"	PVC	45'	0.77%
SS3	89.99	SS2	89.05	6"	PVC	105'	0.90%
SS4	91.54	SS3	90.09	6"	PVC	161'	0.90%
SS5	92.30	SS4	91.64	4"	PVC	73'	0.90%
SS6	91.01	SS3	90.09	6"	PVC	53'	1.75%
SS7	92.30	SS6	91.11	4"	PVC	82'	1.46%
SS8	92.30	SS6	91.84	4"	PVC	23'	2.00%
SS9	96.65	SS10	96.41	8"	DIP	35'	0.70%

N

Know what's below. Call before you dig.

0 10 20 40 60
GRAPHIC SCALE

Littlejohn
An S&ME Company
1615 Edgewater Drive, Suite 200, ORLANDO, FLORIDA 32804
T 407.975.1273 F 407.975.1278 www.leainc.com
Christopher S. Grammier, P.E. 69919
Jay R. Hood PLA LA0001277
Florida Firm Registration No. 28050

SPR GROUP OF FLORIDA, INC.
913 VENTURE AVENUE, SUITE #1
LEESBURG, FL 34748
(352) 801-7992

PERMIT DOCUMENTS
SPRG LADY LAKE - OUTPATIENT CLINICAL BUILDING
LADY LAKE, LAKE COUNTY, FLORIDA

NO.	DATE	DESCRIPTION	BY	CHK	APV
1	3/21/16	LADY LAKE SUBMITTAL	CV	GH	CG

PROJECT NUMBER
20150902

DRAWING NUMBER
C7.1

DRAWING NAME
UTILITY PLAN

G:\Projects\2015\20150902\dwg\Construction\20150902_C7-0_UTL.dwg-C7-1 Utility Plan May 09, 2016 CGrammier

TO BE PER FDOT INDEX #17346

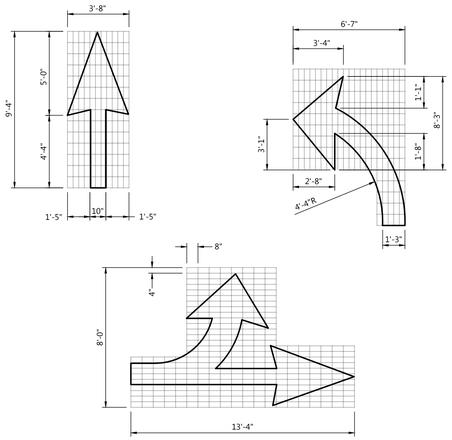

10 ROADWAY DIRECTONAL ARROWS

NO SCALE

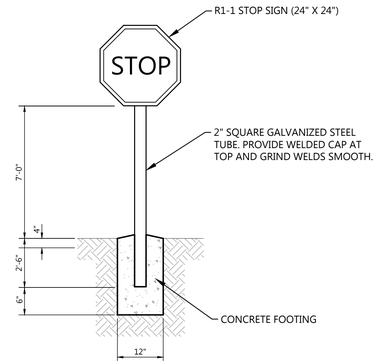

NOTE:

SIGN SHALL BE LOCATED 3' FROM THE EDGE OF THE PAVEMENT UNLESS SUCH PLACEMENT WOULD OBSTRUCT THE SIDEWALK.

7 SIGN INSTALLATION

NO SCALE

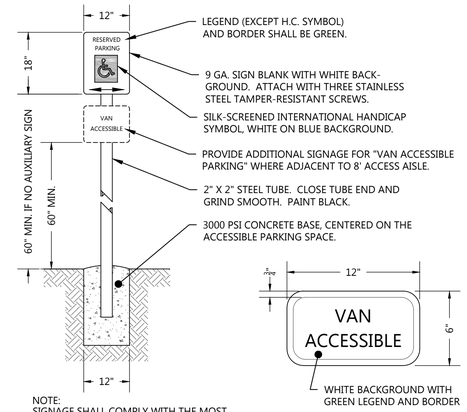

VAN ACCESS PLATE

NOTE:
SIGNAGE SHALL COMPLY WITH THE MOST CURRENT AMERICANS WITH DISABILITIES ACT (A.D.A.) SIGNAGE GUIDELINES.

4 ACCESSIBLE PARKING SIGN

NO SCALE

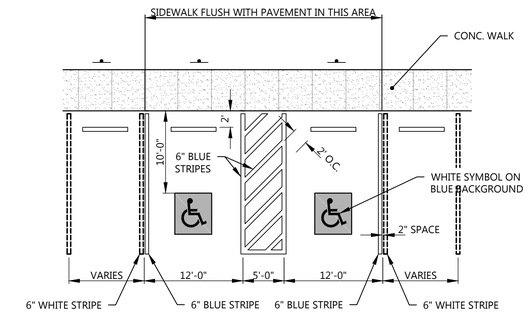

1 ACCESSIBLE PARKING DETAIL

NO SCALE

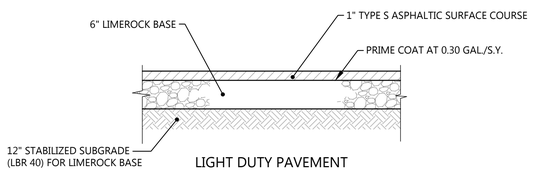

LIGHT DUTY PAVEMENT

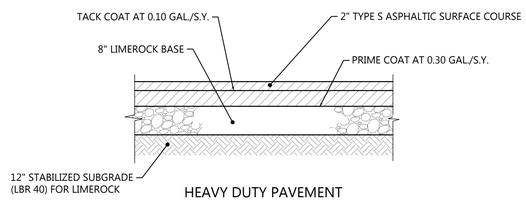

HEAVY DUTY PAVEMENT

NOTE:

ON ALL EXISTING PAVEMENT REPAIR OR REPLACEMENT USE THE PAVEMENT SECTIONS SHOWN ABOVE OR MATCH THE EXISTING SECTION, WHICHEVER IS GREATER.

11 ASPHALT PAVEMENT

NO SCALE

PROCEDURE:

1. INSTALLATION OF AN L.M. SCOFIELD-CHROMIX INTEGRAL COLORED CONCRETE DRIVE AREA, COLOR TBD.
2. SCORE CUTTING TO CREATE BANDING EFFECT AS HORIZONTAL ELEMENT IN CONCRETE.
3. INSTALLATION OF L.M. SCOFIELD-REVIVE EXTERIOR, COLOR TBD, IN A RANDOM PATTERN EFFECT IN AREAS INSIDE THE BANDING EFFECT AREAS. (NOTE: THE REVIVE EXTERIOR STAIN IS TYPICALLY APPLIED AFTER 28 DAYS OF CURING)
4. INSTALLATION OF L.M. SCOFIELD-CURESEAL-S GLOSS AS A 1st. COAT OF SEALER AFTER 28 DAYS OF CURING.
5. INSTALLATION OF L.M. SCOFIELD-CURESEAL-S MATTE AS A 2nd. COAT OF SEALER 24 HOURS AFTER 1st. COAT OF SEALER IS APPLIED.

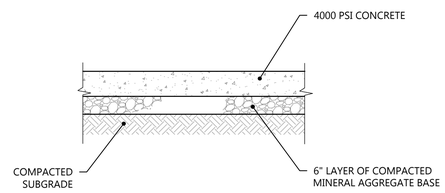

NOTE:

REINFORCING STEEL SHALL BE ASTM GRADE 60.

8 CONCRETE PAVEMENT

NO SCALE

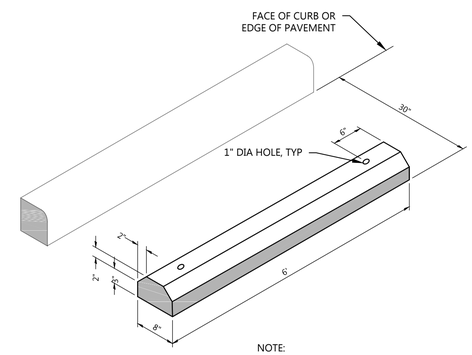

NOTE:

WHEEL STOPS REQUIRE TWO No. 5 X 24" STEEL BAR ANCHOR STAKES FOR EACH SECTION. EACH SECTION SHALL BE REINFORCED WITH TWO No. 3 DEFORMED BARS.

5 PRECAST CONCRETE WHEELSTOP

NO SCALE

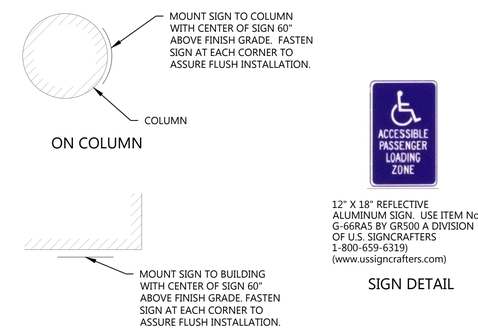

12" X 18" REFLECTIVE ALUMINUM SIGN. USE ITEM No. G-66RA5 BY GR500 A DIVISION OF U.S. SIGNCRAFTERS 1-800-659-6319) (www.ussigncrafters.com)

SIGN DETAIL

NOTE:

WHERE NECESSARY THE ACCESSIBLE LOADING SIGN MAY BE POST-MOUNTED IN A MANNER SIMILAR TO THE ACCESSIBLE PARKING SIGN DETAILED ELSEWHERE.

2 PASSENGER LOADING SIGN

NO SCALE

TO BE PER FDOT INDEX #17346

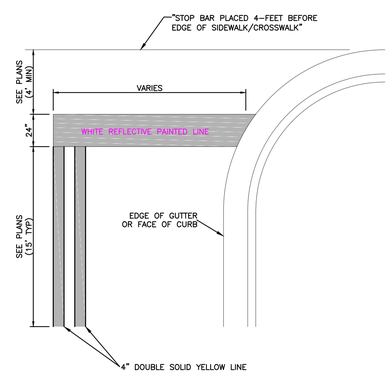

12 PAINTED STOP BAR

NOT TO SCALE

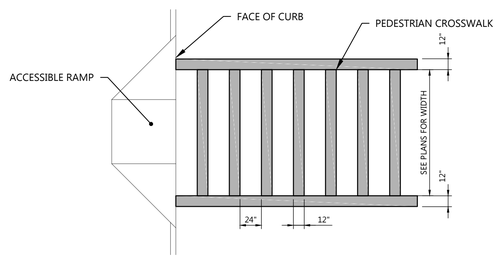

NOTES:

1. THE PEDESTRIAN CROSSWALK SHALL BE IN COMPLIANCE WITH ADAAG 403.3 FDOT INDEX 17346
2. MARKINGS SHALL BE SOLID WHITE PAINTED ON ASPHALT.
3. PAINT 12" WIDE STRIPES AS INDICATED. PER FDOT INDEX #17346.

9 PEDESTRIAN CROSSWALK

NO SCALE

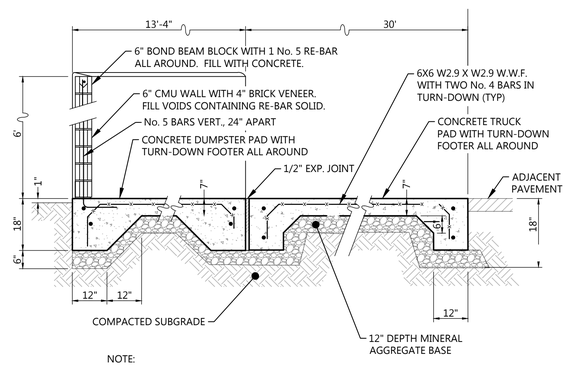

NOTE:

1. ALL CONCRETE SHALL DEVELOP A MINIMUM COMPRESSIVE STRENGTH OF 3500 PSI AT 28 DAYS CURE.
2. BROOM-FINISH SURFACES OF BOTH PADS.
3. ENCLOSURE WALL FINISH SHALL MATCH THE BUILDING FINISH. COORDINATE WITH THE ARCHITECT.

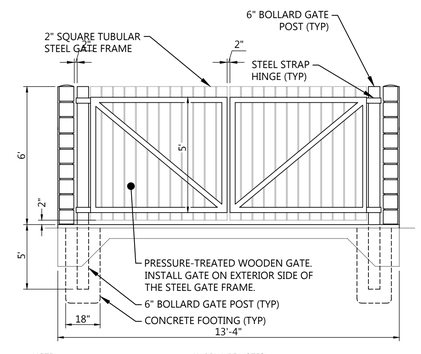

NOTE:

CLEAN THE GATE POSTS, HINGES AND STEEL TUBE FRAME OF ALL DIRT AND OIL AND PRIME WITH A PRIMER APPROVED FOR GALVANIZED SURFACES. AFTER PRIMING PAINT WITH THREE COATS OF EXTERIOR ENAMEL. COORDINATE COLOR WITH THE ARCHITECH.

HARDWARE NOTES:

MANUFACTURER'S STANDARD PRODUCTS, INSTALLED COMPLETE. HINGES SHALL ALLOW GATE TO SWING THROUGH 120° FROM CLOSED TO OPEN. HANG AND SECURE GATES SUCH THAT WHEN LOCKED THEY CANNOT BE LIFTED OFF THE HINGES.

PROVIDE STOPS AND KEEPERS FOR DOUBLE GATES LATCHES SHALL HAVE A PLUNGER BAR ARRANGED TO ENGAGE THE CENTER STOP. ARRANGE LATCHES FOR LOCKING. CENTER STOP SHALL CONSIST OF A DEVICE SET IN CONCRETE TO RECEIVE THE PLUNGER BAR. KEEPERS SHALL CONSIST OF DEVICES FOR SECURING THE FREE END OF THE GATE WHEN IN THE FULLY OPEN POSITION.

6 DUMPSTER PAD WITH SCREEN WALL

NO SCALE

Littlejohn
An S&ME Company
1615 Edgewater Drive, Suite 200, ORLANDO, FLORIDA 32804
T 407.975.1273 F 407.975.1278 www.leainc.com
Christopher S. Grammier, P.E. 69919
Jay R. Hood PLA LA0001277
Florida Firm Registration No. 28050

SPR GROUP OF FLORIDA, INC.
913 VENTURE AVENUE, SUITE #1
LEESBURG, FL 34748
(352) 801-7992

PERMIT DOCUMENTS

SPRG LADY LAKE - OUTPATIENT CLINICAL BUILDING

LADY LAKE, LAKE COUNTY, FLORIDA

NO.	DATE	DESCRIPTION	BY	CHK	APV
1	3/21/16	LADY LAKE SUBMITTAL	CV	GH	CG

PROJECT NUMBER
20150902

DRAWING NUMBER
C8.0

DRAWING NAME
DETAILS

G:\Projects\2015\20150902\dwg\Construction\20150902_C8-0_DET.dwg-C8-0 Details May 09, 2016 CGrammier

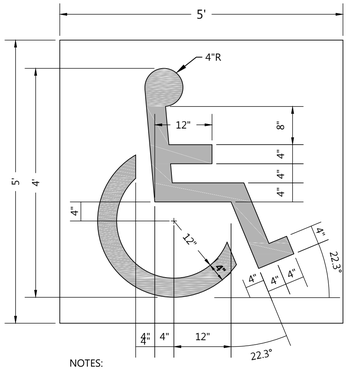

NOTES:

1. THE ACCESSIBLE SYMBOL SHALL BE PAINTED ON ALL ACCESSIBLE SPACES.
2. THE ACCESSIBLE SYMBOL SHALL BE WHITE AND SHALL BE PAINTED ON A BLUE BACKGROUND.

10 PAINTED ACCESSIBLE SYMBOL

NO SCALE

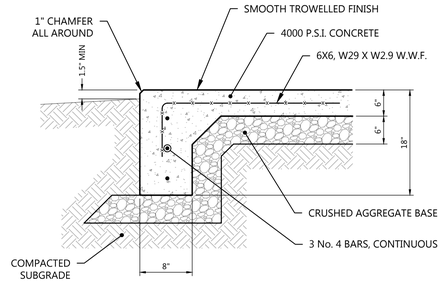

NOTES:

1. REFER TO PLANS FOR SLAB SIZE.
2. PROVIDE 1/2" EXPANSION JOINT WHERE ADJACENT TO RIGID MATERIAL.
3. SLOPE SLAB 1% MIN, 2% MAX.

7 HEAVY DUTY UTILITY PAD

NO SCALE

4

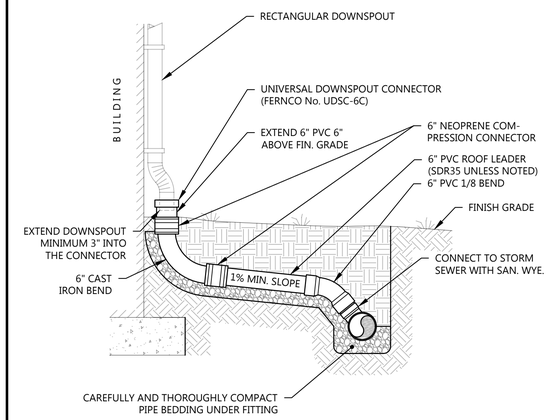

1 DOWNSPOUT COLLECTOR

NO SCALE

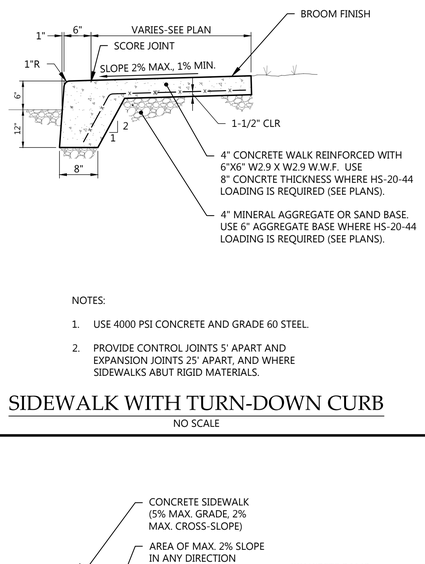

NOTES:

1. USE 4000 PSI CONCRETE AND GRADE 60 STEEL.
2. PROVIDE CONTROL JOINTS 5' APART AND EXPANSION JOINTS 25' APART, AND WHERE SIDEWALKS ABUT RIGID MATERIALS.

11 SIDEWALK WITH TURN-DOWN CURB

NO SCALE

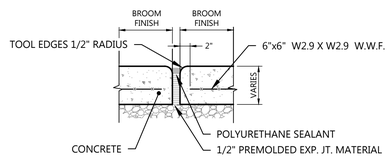

EXPANSION JOINT

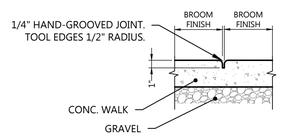

CONTROL JOINT

8 SIDEWALK JOINTS

NO SCALE

5

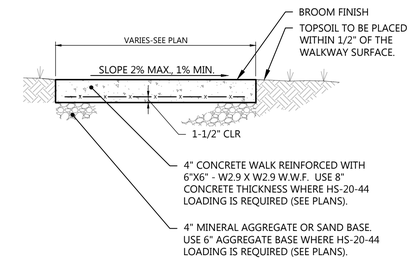

NOTES:

1. USE 4000 PSI CONCRETE AND GRADE 60 STEEL.
2. PROVIDE CONTROL JOINTS 5' APART AND EXPANSION JOINTS 25' APART, AND WHERE SIDEWALKS ABUT RIGID MATERIALS.

2 CONCRETE SIDEWALK

NO SCALE

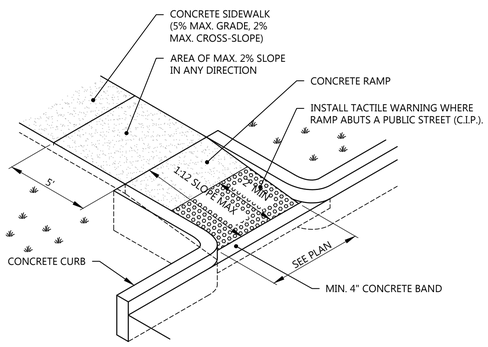

NOTES:

RAMP CONSTRUCTION SHALL BE SIMILAR TO 4" CONCRETE SIDEWALK.

REFERENCE FDOT INDEX #304.

12 ACCESSIBLE RAMP

NO SCALE

9

6

3

Littlejohn
An S&ME Company
1615 Edgewater Drive, Suite 200, ORLANDO, FLORIDA 32804
T 407.975.1273 F 407.975.1278 www.leainc.com
Christopher S. Grammier, P.E. 69919
Jay R. Hood PLA LA0001277
Florida Firm Registration No. 28050

SPR GROUP OF FLORIDA, INC.
913 VENTURE AVENUE, SUITE #1
LEESBURG, FL 34748
(352) 801-7992

PERMIT DOCUMENTS

SPRG LADY LAKE - OUTPATIENT CLINICAL BUILDING

LADY LAKE, LAKE COUNTY, FLORIDA

NO.	DATE	DESCRIPTION	BY	CHK	APV
1	3/21/16	LADY LAKE SUBMITTAL	CV	GH	CG

PROJECT NUMBER
20150902

DRAWING NUMBER
C8.1

DRAWING NAME
DETAILS

G:\Projects\2015\20150902\dwg\Construction\20150902_C8-0_DET.dwg-C8-1 Details May 09, 2016 CGrammier

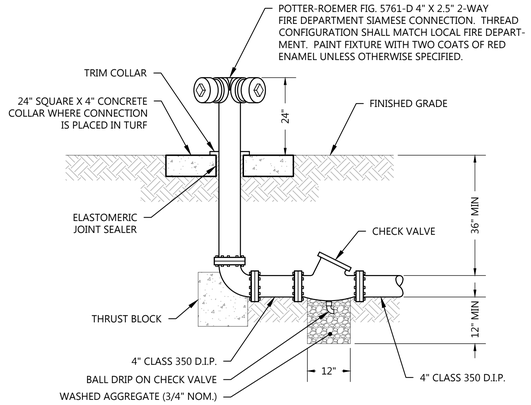

5 REMOTE FIRE DEPT. CONNECTION

NO SCALE

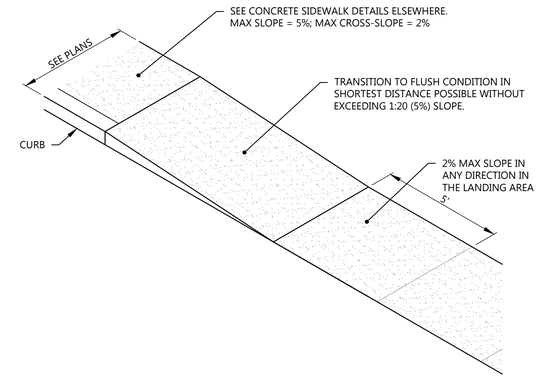

1 SIDEWALK TRANSITION

NO SCALE

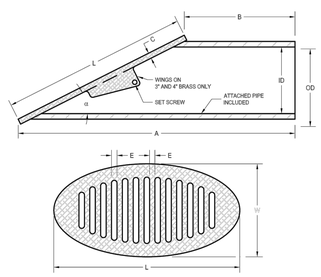

MITERED DRAIN™ INCORPORATED

P.O. Box 1556
Windsor, California 95492
(707)620-0606
(707)620-0607 fax
email: info@mitereddrain.com
http://www.mitereddrain.com

Mitered Drain™(pat. pending)

DIMENSION TABLE *

PIPE SIZE	SLOPE	MODEL NO.	GRATE MATERIAL	ATTACHED MITERED PIPE MATERIAL	A(in.)	B(in.)	C(in.)	ID(in.)	OD(in.)	E(in.)	L(in.)	W (in.)	α	APPROX. WEIGHT (lbs.)	AREA OF GRATE OPENING (sq. in.)
3"	2:1	3MD2B	BRASS	PVC Sch. 40	12	5	0.25	3.03	3.5	0.25	8.4	4.2	26.5°	3	7
3"	3:1	3MD3B	BRASS	PVC Sch. 40	16	5	0.31	3.03	3.5	0.28	12	4.5	18.5°	5	9
4"	3:1	4MD3B	BRASS	PVC Sch. 40	20	6	0.31	3.99	4.5	0.28	15.3	5.5	18.5°	12	17
3"	3:1	3MD3P-G	GRAY HDPE	PVC Sch. 80	15	4	0.375	2.85	3.5	0.375	11.6	4.0	18.5°	2	10.4
3"	3:1	3MD3P-B	BLACK HDPE	PVC Sch. 80	15	4	0.375	2.85	3.5	0.375	11.6	4.0	18.5°	2	10.4
4"	3:1	4MD3P-G	GRAY HDPE	PVC Sch. 80	18.5	4.5	0.375	3.77	4.5	0.375	14.7	5.0	18.5°	3.5	17.9
4"	3:1	4MD3P-B	BLACK HDPE	PVC Sch. 80	18.5	4.5	0.375	3.77	4.5	0.375	14.7	5.0	18.5°	3.5	17.9
6"	3:1	6MD3P	GRAY HDPE	C900-CL 200	29	7.5	0.75	5.85	6.9	0.50	22.4	7.5	18.5°	13	41.9
8"	3:1	8MD3P	GRAY HDPE	C900-CL 150	37	9	0.75	7.97	9.1	0.75	29.3	9.7	18.5°	22	76.7
12"	3:1	12MD3P	GRAY HDPE	C900-CL 150	52	12	0.75	11.63	13.2	1.0	42.5	14	18.5°	60	165.1

USE ← → USE

* ALL DIMENSIONS ARE IN INCHES AND ALL WEIGHTS ARE IN POUNDS, AND MAY VARY.

BASIC SPECIFICATIONS
Brass grates are made of copper alloy No. 836.
HDPE grates have UV inhibitor.
Set screws are type 300 stainless steel.
Not recommended for traffic loads. Made in the U.S.A.

6 12" MES FOR PVC PIPE DETAIL

NOT TO SCALE

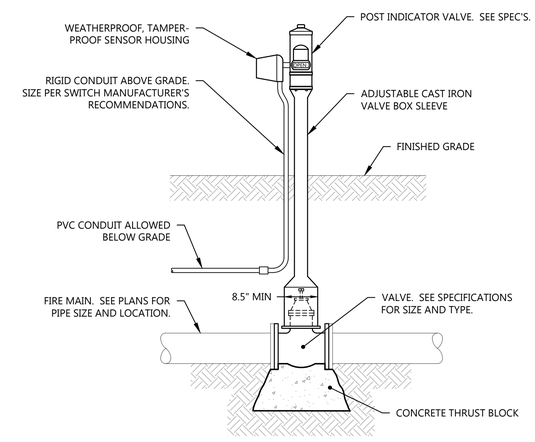

2 POST INDICATOR VALVE

NO SCALE

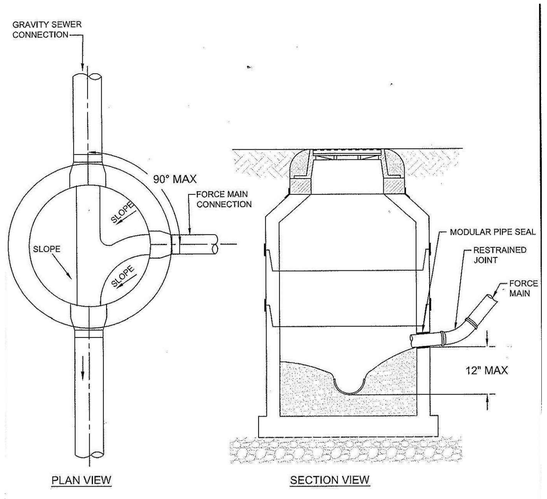

NOTES:
1. FORCE MAIN ORIENTED TO FACILITATE FLOW AND SHALL ENTER MANHOLE WITHIN 1' ABOVE INVERT OF THE EFFLUENT PIPE.
2. BENCH AS REQUIRED FOR NEW FORCE MAIN.
3. MANHOLE RECEIVING FORCE MAIN AND NEXT MANHOLE SHALL BE LINED. FOR CONNECTIONS TO EXISTING MANHOLES, MANHOLE RECEIVING FORCE MAIN AND NEXT MANHOLE SHALL BE COATED OR LINED PER APPENDIX D.
4. CONTRACTOR TO COORDINATE THE PRESENCE OF UTILITIES INSPECTOR DURING CORING AND CONNECTIONS TO EXISTING MANHOLES.

9 FORCEMAIN TO GRAVITY MANHOLE CONNECTION

NOT TO SCALE

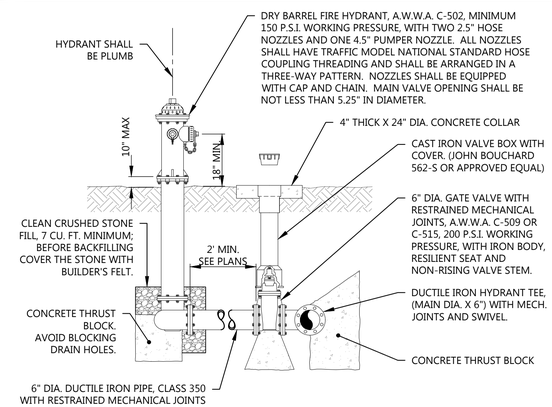

NOTES:
1. SEE STANDARD SPECIFICATIONS FOR WATER AND SEWER CONSTRUCTION FOR ADDITIONAL DETAILS AND CLARIFICATION.
2. PLACE BLUE BI DIRECTIONAL PAVEMENT MARKER IN CENTER OF LANE/DRIVE AISLE FRONTING HYDRANT.

3 FIRE HYDRANT ASSEMBLY

NO SCALE

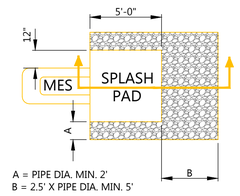

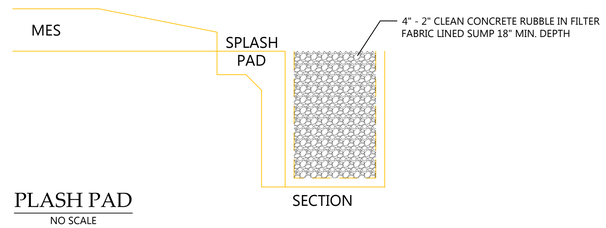

7 PLASH PAD

NO SCALE

8

Littlejohn
An S&ME Company
1615 Edgewater Drive, Suite 200, ORLANDO, FLORIDA 32804
T 407.975.1273 F 407.975.1278 www.leainc.com
Christopher S. Grammier, P.E. 69919
Jay R. Hood PLA LA0001277
Florida Firm Registration No. 28050

SPR GROUP OF FLORIDA, INC.
913 VENTURE AVENUE, SUITE #1
LEESBURG, FL 34748
(352) 801-7992

PERMIT DOCUMENTS
SPRG LADY LAKE - OUTPATIENT CLINICAL BUILDING
LADY LAKE, LAKE COUNTY, FLORIDA

NO.	DATE	DESCRIPTION	BY	CHK	APV
1	3/21/16	LADY LAKE SUBMITTAL	CV	GH	CG

PROJECT NUMBER
20150902

DRAWING NUMBER
C8.2

DRAWING NAME
DETAILS

G:\Projects\2015\20150902\dwg\Construction\20150902_C8-0_DET.dwg-C8-2 Details May 09, 2016 CGrammier

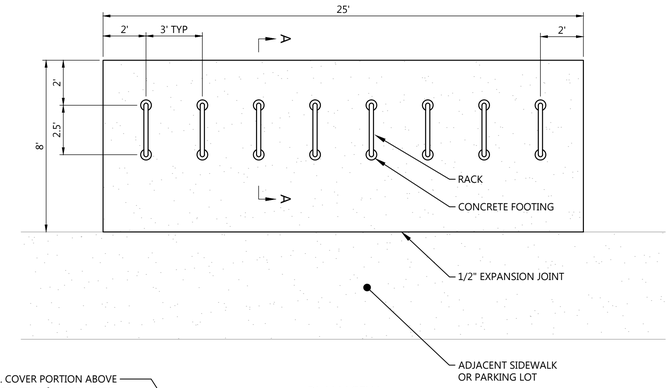

PLAN VIEW

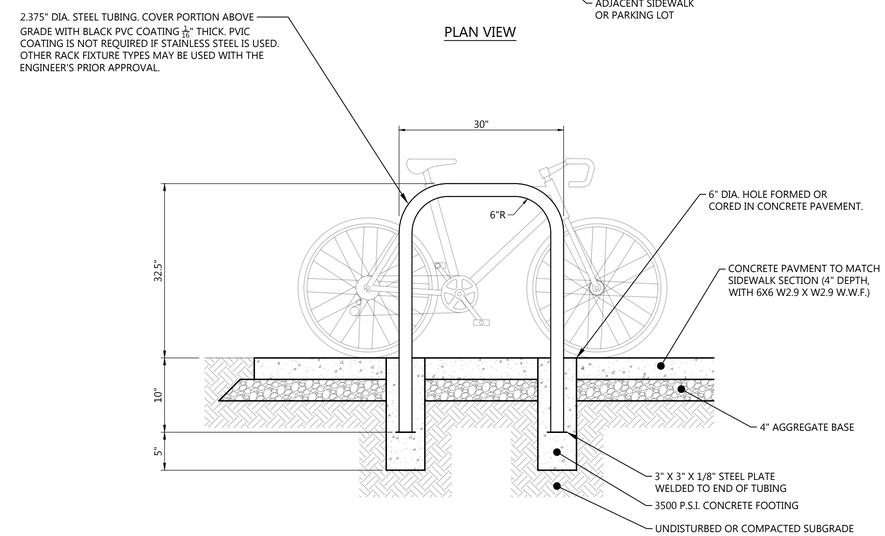

SECTION "A - A"

1 BICYCLE RACK WITH PAD

NO SCALE

3 RESERVED

NOT TO SCALE

6 RESERVED

NOT TO SCALE

4 RESERVED

NOT TO SCALE

7 RESERVED

NOT TO SCALE

5 RESERVED

NOT TO SCALE

2 RESERVED

NOT TO SCALE

Littlejohn
An S&ME Company
1615 Edgewater Drive, Suite 200, ORLANDO, FLORIDA 32804
T 407.975.1273 F 407.975.1278 www.leainc.com
Christopher S. Grammier, P.E. 69919
Jay R. Hood PLA LA0001277
Florida Firm Registration No. 28050

SPR GROUP OF FLORIDA, INC.
913 VENTURE AVENUE, SUITE #1
LEESBURG, FL 34748
(352) 801-7992

PERMIT DOCUMENTS

SPRG LADY LAKE - OUTPATIENT CLINICAL BUILDING

LADY LAKE, LAKE COUNTY, FLORIDA

NO.	DATE	DESCRIPTION	BY	CHK	APV
1	3/21/16	LADY LAKE SUBMITTAL	CV	GH	CG

PROJECT NUMBER
20150902

DRAWING NUMBER
C8.3

DRAWING NAME
DETAILS

G:\Projects\2015\20150902\dwg\Construction\20150902_C8-0_DET.dwg-C8-3 Details May 09, 2016 CGrammier

RILEY & Company, Inc. (H-20 GP)

w/ BATTERY BACK-UP FOR AUDIO AND VISUAL ALARMS

SCOPE: Supply one complete H-20 LP Pre-Fab Lift Station, per design. Pumps shall be capable of pumping domestic & commercial sewage.

Complete system shall be supplied by:
RILEY & Company, Inc.
Sanford, FL 32773 (Ph. 407-265-9963)

NO SUBSTITUTIONS – NO ALTERNATES

The H-20 Load Rated Fiberglass Wetwell Must Be Manufactured By L.F. Manufacturing, Giddings, Texas, Which Includes A Written 20 Yr. Warranty. Certification of the wetwell H-20 load rating must be supplied with submittals. H-20 certification must be signed and sealed by an engineer registered in the State of Florida.

After the H-20 load rated wetwell has been installed, the ASTM Certification Number and Serial Tracking Number must be visible.

PUMPS:

Submersible grinder pumps shall be HOMA Model GRP 10/3.The pumps shall be installed in the H-20 GP FRP wetwell utilizing a dual slide rail system.
The grinder unit shall be capable of macerating materials normally found in domestic and commercial sewage into a fine slurry which will pass through the pump and the Sch.80 PVC discharge piping.

Stator winding shall be open type with Class G insulation and shall be seal fitted into the stator housing. The use of pins, bolts, or other fastening devices is not acceptable.
A heat sensor thermostat shall be attached to the top end of the motor winding and shall be connected in series with the magnetic contactor coil in the control panel to stop motor if winding temperature exceeds 140 C., but shall automatically reset when the winding temperature returns to normal.
Two heat sensor thermostats shall be used on three phase motors.

The pump motor grinder shaft shall be AISI 430F SS threaded to take the pump impeller and the grinder impeller.
Upper & lower mechanical seals shall be Silicon Carbide vs Silicon Carbide.

DUPLEX CONTROL PANEL:

To insure complete unit and warranty responsibility the electrical control panel must be manufactured and built by the pump supplier. The pump supplier must be a TUV (UL508A CERTIFIED) manufacturing facility, with a minuimum of 5 years history in the manufacturing of electrical control panels.

The Enclosure shall be NEMA 4X, minimum 30" high x 30" wide x 10" deep fiberglass with 5 point latching system.
The enclosure shall have external mounting feet to allow for wall mounting.
The following components shall be mounted through the enclosure:
1- ea. Red Alarm Beacon (Light) 4" x 4" Minimum Diameter
1- ea. Alarm Horn (minimum 95 DCB)
1- ea. Generator Receptacle w/ weatherproof cover(SCM460 -UL 1686)
1- ea. Alarm Silence Pushbutton

The back panel shall be fabricated from .125, 5052-H32 marine alloy aluminum. All components shall be mounted by machined stainless steel screws.

The following components shall be mounted to back panel:
2- ea. Motor Contactors
1- ea. Volt Monitor (1 Ph) Phase Monitor (3 Ph) w/2 N/O & 1 N/C Contacts
1- ea. Control Transformer (480 Volt Only) (Min. 500VA)
1- ea. Silence Relay Module
1- ea. Duplex Alternator w/ Pump Selector Switch
1- ea. Model RCBB5AH Battery Back-Up w/ Smart Charger
20- ea. Terminals For Field Connections
6- ea. Terminals For Motor Connections (Single Phase Only)
7- ea. Grounding Lugs
1- ea. Seal Failure Relay

The inner door shall be fabricated from .080, 5052-H32 marine alloy aluminum. The inner door shall have a continuous aluminum piano hinge.

The following components shall be mounted through the inner door:
1- ea. Main Circuit Breaker
1- ea. Emergency Circuit Breaker
1- ea. Mechanical Interlock For Emergency And Main Breakers (UL Listed)
2- ea. Short Circuit Protectors w/ Auxiliary Contacts
1- ea. Control Circuit Breaker
2- ea. Seal Failure Indicator Lights
1- ea. Hand-Off-Auto Selector Switches
2- ea. Pump Run Pilot Lights
1- ea. Power On Pilot Light
2- ea. Elapse Time Meters (Non-Resetable)
1- ea. GFI Duplex Convenience Outlet

COMPONENT SPECIFICATIONS:

All circuit breakers shall be molded thermal magnetic.
The mechanical interlock shall prevent the normal and emergency main breakers being energized at the same time.
An emergency generator receptacle shall be supplied in accordance with DEP standards. The generator receptacle shall be adequately sized to meet the equipment operating conditions.

NEUTRAL TO BE SUPPLIED FOR BOTH 230V 3PHASE OR 230V SINGLE PHASE POWER

All motor short circuit protection devices must provide for under voltage release and class 10 overload protection on all three phases. Visible trip indication, test, and reset capability must be provided without opening inner door.
Open frame, across the line, contactors shall be rated per IEC standards and properly sized per the motor requirements.
Contactors shall provide for safe touch power and control terminals.
Lightning Arrestor shall meet UL1449 3rd Edition or exceed the requirements of ANSI/IEEE Std. C62.21-1984 section 8.6.1. and 8.7.3 shall be supplied by electrician and mounted on the bottom side of the switch disconnect ahead of the pump control panel.
A voltage monitor shall be supplied for single phase service.
A phase monitor shall be supplied for (3) phase service.
A green pilot light shall be supplied for each motor. The pilot light shall illuminate each time the motor is called to run.
Each pump shall have an Elapse Time Meter to record the accumulated run time. The ETM shall be 2" diameter, non-resettable, six digit, totally encapsulated unit.
A Red pilot light shall be supplied for control power. The pilot light shall illuminate when the control power is available inside the control panel.
Relays shall be ice-cube plug in type. Relay contacts shall be rated 10 amp minimum, DPDT.
Twenty (20) terminals shall be supplied for field connections.
The terminals shall be rated 25 amps minimum.
Each motors over-temperature contact shall be connected to the terminal strip and shall open a contact to de-energize the appropriate motor upon a high temperature within the motor.
A 15 Amp GFI duplex receptacle shall be supplied and mounted on the innerdoor.
Ground lugs shall be supplied and appropriately sized for each motor and for service entrance.

MISCELLANEOUS: All wiring on the back panel shall be contained within the wiring duct. All wiring between the inner door and the back panel shall be contained with in a plastic spiral wrap.
Each wire shall have a wire number at each end to correspond to the as built drawing for field troubleshooting.
The control panel must be manufactured in-house by lift station supplier and be a TUV (UL508A Certified) facility.

FASTENERS & APPURTANCES: All fasteners, lifting cables, float cable bracket, hinges, and appurtenances shall be made of AISI 304SS.
A 304SS slide/latch assembly shall be provided tor holding the doors open on the wetwell and valve box.
Slide rails shall be made of SCH.40 AISI 304SS pipe.
Pump lifting cables shall be made of AISI 304 SS.
Pump lifting bales shall be made of AISI 304 SS.

H-20 LOAD RATED WETWELL WITH LIFTING LUGS:
The fiberglass wetwell must be H-20 load rated with integral lifting lugs, fiberglass slope in bottom of wetwell and valve box.Certification of the H-20 load rating must be supplied at the time of submittals to Engineer. The wetwell shall be manufactured of fiberglass reinforced polyester (FRP) of depth and diameter as shown on the lift station elevation detail. The wall thickness shall be adequate for the depth of the wetwell to maintain the H-20 LOAD RATING.

EXECUTION:
Installation shall be in strict accordance with the manufacturer's recommendations in the locations shown on the drawing.

INSPECTION & TESTING: A factory representative shall be provide for a one (1) time start-up and shall have complete knowledge of the proper operation and maintenance of complete system.
Megger the motors. The pump motors shall be megged out prior to the start-up to ensure that the insulation of the pump motor/cable is intact.
The pump controls and pumps shall be checked for mechanical reliability and proper operation.

LIFT STATION WILL BE PRIVATELY OWNED AND MAINTAINED.

PUMP DATA		ELEVATIONS	
PRIMARY PUMP CAPACITY	40 GPM	TOP OF WETWELL	92.50
PRIMARY TDH	11 'TDH	INLET INVERT	88.60
PUMP MANUFACTURER	HOMA	HIGH LEVEL ALARM (HLA)	88.10
PUMP MODEL #	GRP 10/3	2nd PUMP ON (LAG)	87.60
R.P.M.	3450	1st PUMP ON (LEAD)	87.10
HORSEPOWER	0.8	PUMPS OFF (OFF)	85.05
ELECTRICAL/ VOLTS / PHASE	230V/3	BOTTOM OF WETWELL	83.00
PUMP DISCHARGE SIZE	2"	WETWELL DIAMETER	36"

*** ELECTRICIAN NOTES:**

1. DRAWING NOT TO SCALE
* 2. ALL ELECTRICAL WORK SHALL BE IN ACCORDANCE WITH LOCAL CODES
* 3. ELECTRICIAN SHALL SEAL OFF CONDUIT RUNS
* 4. ELECTRICIAN TO MOUNT LIGHTNING ARRESTOR AT SWITCH DISCONNECT
* 5. CONTRACTOR SHALL VERIFY POWER SOURCE PRIOR TO ORDERING EQUIPMENT
* 6. NEUTRAL TO BE SUPPLIED FOR 230V-3 PHASE OR 230V-SINGLE PHASE POWER.

RILEY & CO. / H-20 GP 01-12-16

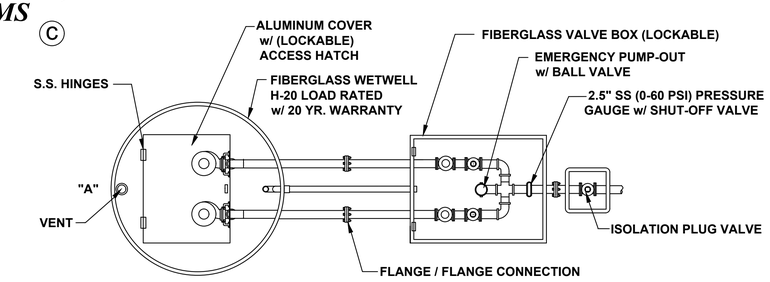

NOTE: PUMP CONTROL PANEL SHALL BE LOCATED 3 FEET FROM WETWELL PERIMETER AT POINT "A"

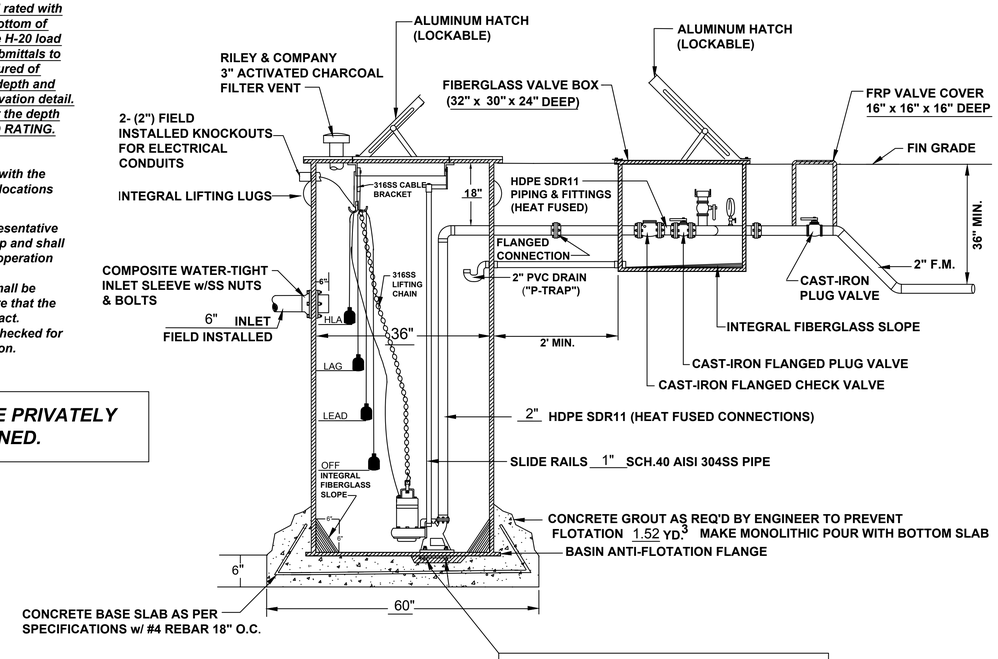

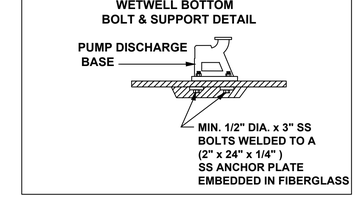

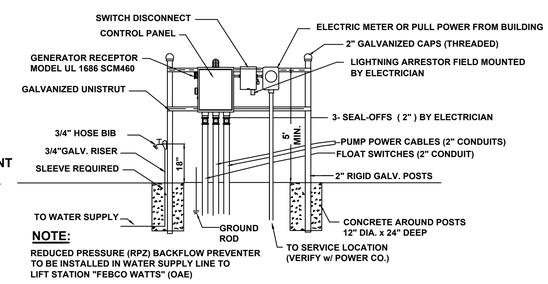

NOTE:
REDUCED PRESSURE (RPZ) BACKFLOW PREVENTER TO BE INSTALLED IN WATER SUPPLY LINE TO LIFT STATION "FEBCO WATTS" (OAE)

ELECTRICAL RISER FOR ILLUSTRATION PURPOSES ONLY

Littlejohn
An S&ME Company
1615 Edgewater Drive, Suite 200, ORLANDO, FLORIDA 32804
T 407.975.1273 F 407.975.1278 www.leainc.com
Christopher S. Grammier, P.E. 69919
Jay R. Hood PLA LA0001277
Florida Firm Registration No. 28050

SPR GROUP OF FLORIDA, INC.
913 VENTURE AVENUE, SUITE #1
LEESBURG, FL 34748
(352) 801-7992

PERMIT DOCUMENTS
SPRG LADY LAKE - OUTPATIENT CLINICAL BUILDING
LADY LAKE, LAKE COUNTY, FLORIDA

NO.	DATE	DESCRIPTION	BY	CHK	APV
1	3/21/16	LADY LAKE SUBMITTAL	CV	GH	CG

PROJECT NUMBER 20150902
DRAWING NUMBER C8.4
DRAWING NAME LIFT STATION DETAILS

G:\Projects\2015\20150902\dwg\Construction\20150902_C8-0_DET.dwg-C8-4 Lift Station Details May 09, 2016 CGrammier

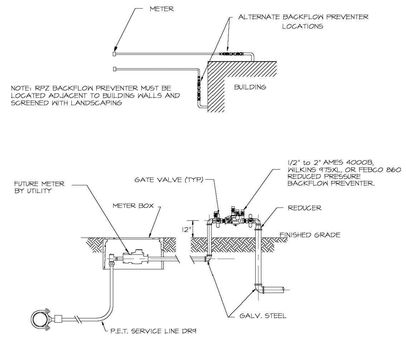

NOTE: SEE APPROPRIATE ASSEMBLY DETAILS FOR ADDITIONAL INFORMATION

TO BE USED FOR HIGHER RISK FACILITIES ONLY, SUCH AS:

COMMERCIAL CAR WASH
COMMERCIAL LAUNDRIES / DRY CLEANERS
PHOTO PROCESSING FACILITIES
PEST CONTROL COMPANIES
COOLING TOWERS
HOSPITALS
MEDICAL & DENTAL OFFICES
ASSISTED LIVING/NURSING FACILITIES
VETERINARY CLINICS
WASTEWATER LIFT STATIONS (IF SERVED BY POTABLE WATER)
WASTEWATER TREATMENT PLANT
MAINTENANCE FACILITY (GOLF, LANDSCAPE, ETC.)
GROCERY STORE
BEAUTY SALON/SPA
HOME IMPROVEMENT/HARDWARE
FUNERAL HOME
EYE CARE CLINIC
LABORATORY / BLOOD CENTER
AUTOMOTIVE / TIRE STORE

ISSUE DATE 07-11-03 | 1 OF 2 | NOT TO SCALE

GRANT & DZURO Engineers Surveyors Planners
1071 Canal Street The Villages, FL 32162
Tel No. (352)753-6260 Fax No. (352)753-6264

REVISIONS 3-27-07 3-23-09 4-15-11

BACKFLOW PREVENTER ASSEMBLY DETAIL

PAGE W-51

1

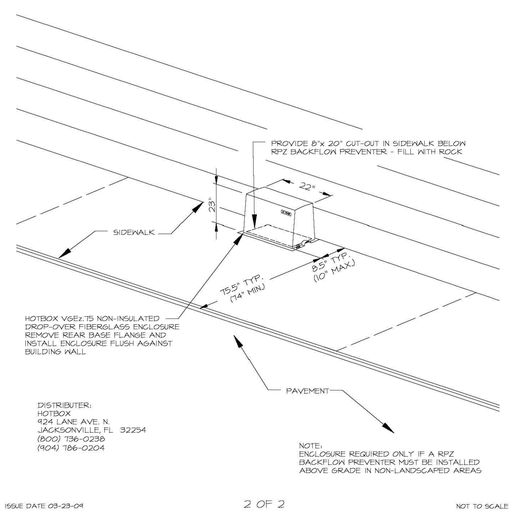

ISSUE DATE 03-23-04 | 2 OF 2 | NOT TO SCALE

GRANT & DZURO Engineers Surveyors Planners
1071 Canal Street The Villages, FL 32162
Tel No. (352)753-6260 Fax No. (352)753-6264

REVISIONS

BACKFLOW PREVENTER ASSEMBLY DETAIL

PAGE W-51

2

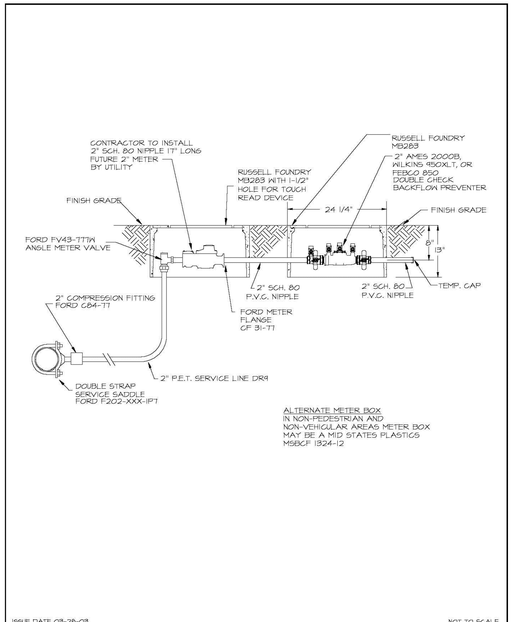

ISSUE DATE 03-28-03 | NOT TO SCALE

GRANT & DZURO Engineers Surveyors Planners
1100 Main Street The Villages, FL 32159
Tel No. (352)753-6260 Fax No. (352)753-6264

REVISIONS 8-23-03 4-21-08

2" COMMERCIAL WATER METER ASSEMBLY DETAIL

PAGE W-26

3

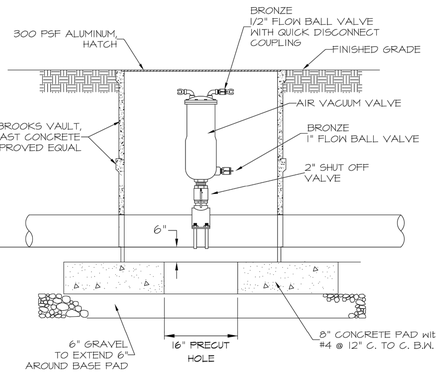

ISSUE DATE 03-28-03 | NOT TO SCALE

GRANT & DZURO Engineers Surveyors Planners
1100 Main Street The Villages, FL 32159
Tel No. (352)753-6260 Fax No. (352)753-6264

REVISIONS 8-23-03

FORCE MAIN AIR RELEASE VALVE DETAIL

PAGE SS-3

4

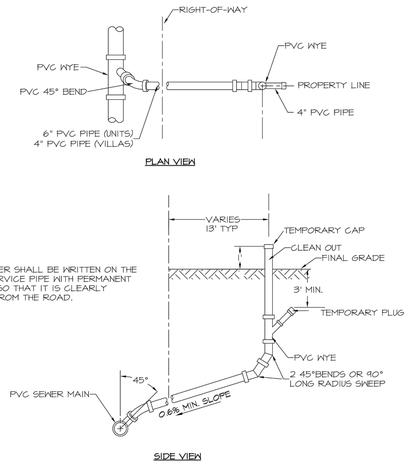

ISSUE DATE 03-28-03 | NOT TO SCALE

GRANT & DZURO Engineers Surveyors Planners
1071 Canal Street The Villages, FL 32159
Tel No. (352)753-6260 Fax No. (352)753-6264

REVISIONS 8-23-03 3-23-04

SANITARY SEWER SINGLE SERVICE DETAIL

PAGE SS-4

5

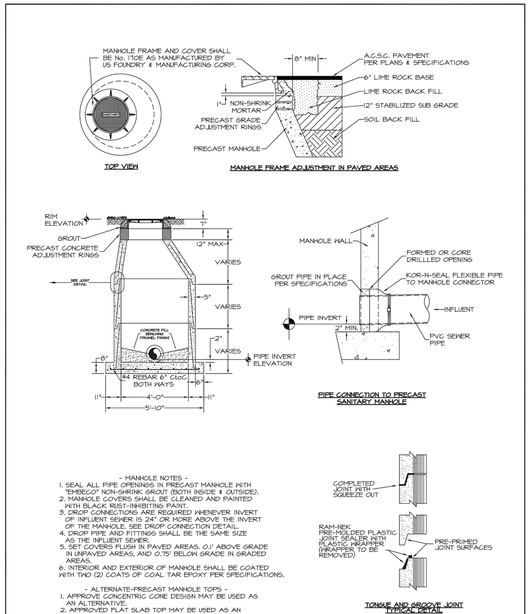

ISSUE DATE 03-28-03 | NOT TO SCALE

GRANT & DZURO Engineers Surveyors Planners
1071 Canal Street The Villages, FL 32159
Tel No. (352)753-6260 Fax No. (352)753-6264

REVISIONS 01-15-04 3-23-04

SANITARY SEWER MANHOLE DETAIL

PAGE SS-7

6

G:\Projects\2015\20150902\dwg\Construction\20150902_C9-0_CIT.dwg-C9-0 City Details May 09, 2016 CGrammier

Littlejohn
An S&ME Company
1615 Edgewater Drive, Suite 200, ORLANDO, FLORIDA 32804
T 407.975.1273 F 407.975.1278 www.leainc.com
Christopher S. Grammier, P.E. 69919
Jay R. Hood PLA LA0001277
Florida Firm Registration No. 28050

SPR GROUP OF FLORIDA, INC.
913 VENTURE AVENUE, SUITE #1
LEESBURG, FL 34748
(352) 801-7992

PERMIT DOCUMENTS
SPRG LADY LAKE - OUTPATIENT CLINICAL BUILDING
LADY LAKE, LAKE COUNTY, FLORIDA

NO.	DATE	DESCRIPTION	BY	CHK	APV
1	3/21/16	LADY LAKE SUBMITTAL	CV	GH	CG

PROJECT NUMBER
20150902

DRAWING NUMBER
C9.0

DRAWING NAME
VCSA DETAILS

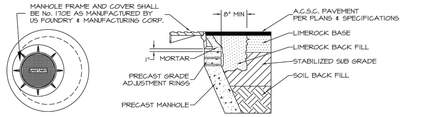

TOP VIEW

MANHOLE FRAME ADJUSTMENT IN PAVED AREAS

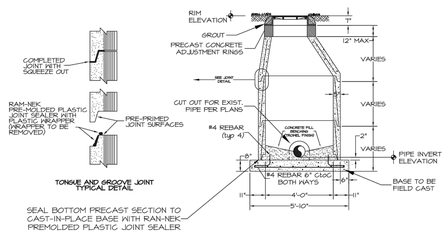

TONGUE AND GROOVE JOINT TYPICAL DETAIL

- MANHOLE NOTES -

1. SEAL ALL PIPE OPENINGS IN PRE CAST MANHOLE WITH NON-SHRINK GROUT (BOTH INSIDE & OUTSIDE).
2. MANHOLE COVERS SHALL BE CLEANED AND PAINTED WITH BLACK RUST-INHIBITING PAINT.
3. DROP CONNECTIONS ARE REQUIRED WHENEVER INVERT OF INFLUENT SEWER IS 24" OR MORE ABOVE THE INVERT OF THE MANHOLE.
4. DROP PIPE AND FITTINGS SHALL BE THE SAME SIZE AS THE INFLUENT SEWER.
5. SET COVERS FLUSH IN PAVED AREAS, 0.1' ABOVE GRADE IN UNPAVED AREAS, AND 0.75' BELOW GRADE IN GRADED AREAS.
6. INTERIOR AND EXTERIOR OF MANHOLE SHALL BE COATED WITH TWO (2) COATS OF COAL TAR EPOXY PER SPECIFICATIONS.

- ALTERNATE PRECAST MANHOLE TOPS -

1. APPROVED CONCENTRIC CONE DESIGN MAY BE USED AS AN ALTERNATIVE.
2. APPROVED FLAT SLAB TOP MAY BE USED AS AN ALTERNATE.

ISSUE DATE 03-28-03 NOT TO SCALE

GRANT & DZURO Engineers Surveyors Planners
1071 Canal Street The Villages, FL 32162
Tel No. (352)753-6260 Fax No. (352)753-6264

REVISIONS 3-23-04

SANITARY SEWER "DOGHOUSE" MANHOLE DETAIL

PAGE SS-8

1

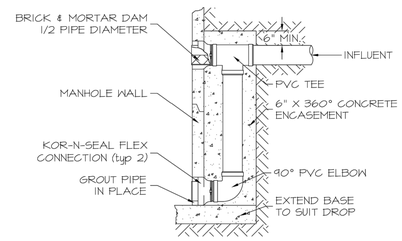

ISSUE DATE 03-28-03 NOT TO SCALE

GRANT & DZURO Engineers Surveyors Planners
1100 Main Street The Villages, FL 32159
Tel No. (352)753-6260 Fax No. (352)753-6264

REVISIONS

STANDARD DROP MANHOLE CONNECTION DETAIL

PAGE SS-9

2

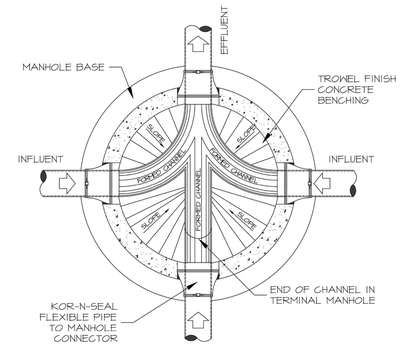

ISSUE DATE 03-28-03 NOT TO SCALE

GRANT & DZURO Engineers Surveyors Planners
1100 Main Street The Villages, FL 32159
Tel No. (352)753-6260 Fax No. (352)753-6264

REVISIONS

TYPICAL INVERT DETAIL

PAGE SS-10

3

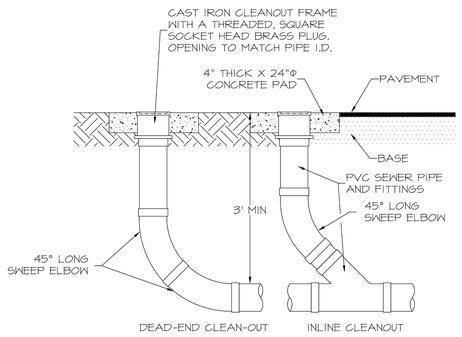

NOTE: IN PAVED AREAS INSTALL CONCRETE PAD AFTER PAVING IS COMPLETE.

ISSUE DATE 03-28-03 NOT TO SCALE

GRANT & DZURO Engineers Surveyors Planners
1071 Canal Street The Villages, FL 32162
Tel No. (352)753-6260 Fax No. (352)753-6264

REVISIONS 8-4-05 6-30-06

CLEAN-OUT DETAIL (6" and SMALLER MAINS)

PAGE SS-11

4

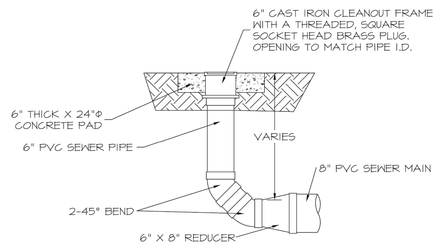

ISSUE DATE 03-28-03 NOT TO SCALE

GRANT & DZURO Engineers Surveyors Planners
1100 Main Street The Villages, FL 32159
Tel No. (352)753-6260 Fax No. (352)753-6264

REVISIONS

CLEAN-OUT DETAIL (8" MAIN)

PAGE SS-12

5

NOTES: FOR BEDDING AND TRENCHING

1. Dimension Bc = Pipe O.D.
   Dimension Bd = Trench Width at Top of Pipe
   Maximum Bd = Bc + 30"
   Minimum Bd = Maximum Dimension of Bell + 8" (Unsheeted Trench)
2. DEPTH FOR REMOVAL FOR UNSUITABLE MATERIAL SHALL BE AS REQUIRED TO REACH SUITABLE FOUNDATION. FOR ROCK OR OTHER NON-CUSHIONING MATERIAL, DEPTH SHALL BE 12" BELOW BOTTOM OF UTILITY.
3. ALL BACKFILL AND SELECT MATERIAL UNDER ALL ROADWAYS, DRIVES (INCLUDING DIRT DRIVES), AND PARKING AREAS SHALL BE COMPACTED TO 98% OF THE MODIFIED PROCTOR MAXIMUM DRY DENSITY. (AASHTO T-180). BACKFILL AND SELECT MATERIAL UNDER ALL OTHER AREAS SHALL BE COMPACTED AS FOLLOWS: FROM BOTTOM OF TRENCH TO 12" ABOVE TOP OF PIPE - 95% OF MODIFIED PROCTOR MAXIMUM DRY DENSITY (AASHTO T-180). FROM 12" ABOVE TOP OF PIPE TO TOP OF BACKFILL - 90% OF MODIFIED PROCTOR MAXIMUM DRY DENSITY (AASHTO T-180)

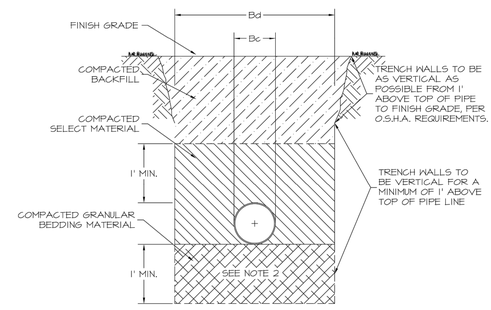

ISSUE DATE 03-28-03 NOT TO SCALE

GRANT & DZURO Engineers Surveyors Planners
1100 Main Street The Villages, FL 32159
Tel No. (352)753-6260 Fax No. (352)753-6264

REVISIONS 7-11-03

STANDARD PIPE BEDDING DETAIL

PAGE SS-13

6

Littlejohn
An S&ME Company
1615 Edgewater Drive, Suite 200, ORLANDO, FLORIDA 32804
T 407.975.1273 F 407.975.1278 www.leainc.com
Christopher S. Grammier, P.E. 69919
Jay R. Hood PLA LA0001277
Florida Firm Registration No. 28050

SPR GROUP OF FLORIDA, INC.
913 VENTURE AVENUE, SUITE #1
LEESBURG, FL 34748
(352) 801-7992

PERMIT DOCUMENTS

SPRG LADY LAKE - OUTPATIENT CLINICAL BUILDING

LADY LAKE, LAKE COUNTY, FLORIDA

NO.	DATE	DESCRIPTION	BY	CHK	APV
1	3/21/16	LADY LAKE SUBMITTAL	CV	GH	CG

PROJECT NUMBER 20150902

DRAWING NUMBER C9.1

DRAWING NAME VCSA DETAILS

G:\Projects\2015\20150902\dwg\Construction\20150902_C9-0_CIT.dwg-C9-1 City Details May 09, 2016 CGrammier

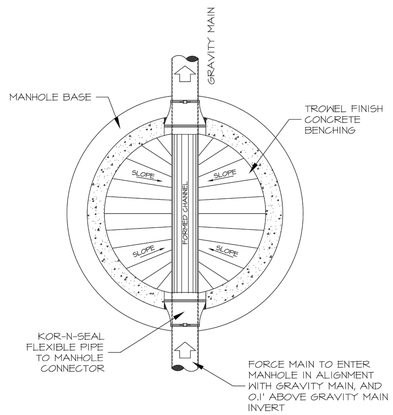

ISSUE DATE 03-28-03 NOT TO SCALE

GRANT & DZURO Engineers Surveyors Planners
1100 Main Street The Villages, FL 32159
Tel No. (352)753-6260 Fax No. (352)753-6264

REVISIONS

FORCE MAIN MANHOLE TERMINATION DETAIL

PAGE SS-14

1

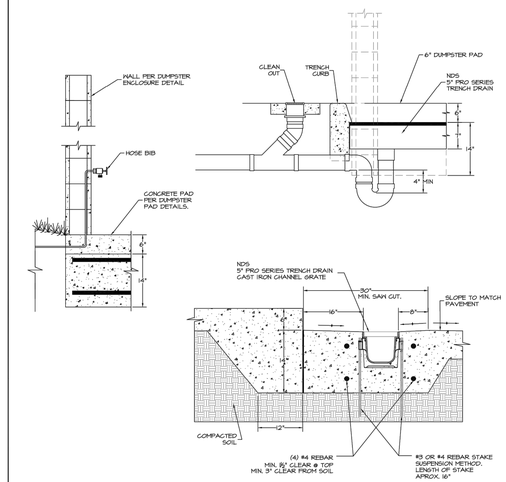

ISSUE DATE 03-28-03 NOT TO SCALE

The Villages

REVISIONS 8-23-03 6-30-06 3-1-13 10-28-15

DUMPSTER PAD DRAIN DETAIL

PAGE SS-17

2

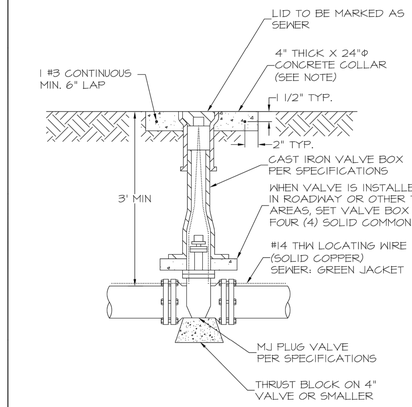

NOTE: IN RESIDENTIAL AREAS ONLY, VALVE BOX CONCRETE COLLARS ARE NOT REQUIRED. TWO INCH (2") DIAMETER BRASS DISCS SHALL BE GLUED TO THE CLOSEST CURB INDICATING THE DIRECTION TO THE VALVE. GENERALLY, 2 DISCS SHALL BE REQUIRED FOR EACH VALVE (90° APART).

ISSUE DATE 03-23-04 NOT TO SCALE

GRANT & DZURO Engineers Surveyors Planners
1071 Canal Street The Villages, FL 32162
Tel No. (352)753-6260 Fax No. (352)753-6264

REVISIONS

PLUG VALVE & BOX DETAIL

PAGE SS-20

3

GENERAL WATER NOTES

1. WATER SYSTEM COMPONENTS SHALL BE INSTALLED IN STRICT ACCORDANCE WITH ALL LOCAL CODES AND REGULATIONS, TESTED, CLEANED, DISINFECTED AND BACTERIOLOGICALLY CLEARED FOR SERVICE IN ACCORDANCE WITH THE LATEST AWWA STANDARDS AND CHAPTER 62-555, FLORIDA ADMINISTRATIVE CODE.

2. ALL PIPE SHALL BEAR THE "NSF" SEAL FOR POTABLE WATER.

3. WATER MAINS SHALL BE BLUE PVC CONFORMING TO ASTM 2241 (¼"), SDR21, AWWA C-900 (4"-12"), C-905 (14"-36"), DR 25. ALL COUPLINGS, CLEANING COMPOUNDS, SOLVENTS, LUBRICANTS, AND PIPE PREPARATION FOR LAYING, SHALL BE IN ACCORDANCE WITH THE MANUFACTURER'S LATEST RECOMMENDATIONS.

4. HYDROSTATIC PRESSURE TESTING SHALL BE IN ACCORDANCE WITH AWWA C-605/M23.

5. DISINFECTION AFTER INSTALLATION SHALL BE IN ACCORDANCE WITH AWWA C-651.

6. DEPTH OF WATER LINES FROM CROWN OF PIPE TO FINISHED GRADE SHALL BE; 36" IN UNITS, PATIO STYLE VILLAS, AND COURTYARD STYLE VILLAS.

7. WATER MAINS TO BE LOCATED 1' FROM RIGHT OF WAY IN PATIO VILLAS, UNLESS OTHERWISE NOTED.

8. WATER MAINS TO BE LOCATED 5.5' FROM RIGHT OF WAY IN COURTYARD VILLAS, UNLESS OTHERWISE NOTED.

9. WATER MAINS TO BE LOCATED 3' FROM RIGHT OF WAY IN STANDARD AND PREMIER UNITS, UNLESS OTHERWISE NOTED.

10. WHEN POOL EQUIPMENT IS TO BE INSTALLED AN AIR-GAP OF 3" MINIMUM SHALL BE MAINTAINED BETWEEN EQUIPMENT AND WATER AND SANITARY SYSTEMS.

11. ALL POTABLE WATER MAINS THAT ARE NOT BLUE PVC SHALL BE INSTALLED WITH IDENTIFIER TAPE LOCATED ON TOP OF PIPE & SECURED TAPE SHALL BE 3" VINYL BLUE IN COLOR WITH LETTERING INDICATING "POTABLE WATER" AT TWO FOOT INTERVALS ALONG TAPE.

GENERAL REUSE AND NON-POTABLE IRRIGATION NOTES

1. ALL REUSE AND NON-POTABLE IRRIGATION PIPING TO BE A SOLID PURPLE COLOR.

2. REUSE MAINS SHALL BE PVC CONFORMING TO AWWA C-900, DR 25. ALL COUPLINGS, CLEANING COMPOUNDS, SOLVENTS, LUBRICANTS, AND PIPE PREPARATION, FOR LAYING, SHALL BE IN ACCORDANCE WITH THE PIPE MANUFACTURER'S LATEST RECOMMENDATIONS.

3. DEPTH OF REUSE AND NON-POTABLE IRRIGATION LINES TO BE 48" BELOW FINISHED GRADE.

4. ALL REUSE AND NON-POTABLE IRRIGATION MAINS THAT ARE NOT PURPLE PVC SHALL BE INSTALLED WITH IDENTIFIER TAPE LOCATED ON TOP OF PIPE & SECURED TAPE SHALL BE 3" VINYL PURPLE IN COLOR WITH LETTERING INDICATING "REUSE" OR "NON-POTABLE IRRIGATION" AT TWO FOOT INTERVALS ALONG TAPE.

ISSUE DATE 03-28-03 1 OF 3 NOT TO SCALE

GRANT & DZURO Engineers Surveyors Planners
1071 Canal Street The Villages, FL 32159
Tel No. (352)753-6260 Fax No. (352)753-6264

REVISIONS 01-15-04 3-23-04 3-1-13

TYPICAL UTILITY NOTES

PAGE W-2

4

POTABLE WATER CLEARANCE REQUIREMENTS

HORIZONTAL SEPARATION: BETWEEN UNDERGROUND WATER MAINS AND SANITARY OR STORM SEWERS, WASTEWATER OR STORMWATER FORCE MAIN, RECLAIMED WATER PIPELINES, AND ON-SITE SEWAGE TREATMENT AND DISPOSAL SYSTEMS.

1. NEW OR RELOCATED, UNDERGROUND WATER MAINS SHALL BE LAID TO PROVIDE A HORIZONTAL DISTANCE OF AT LEAST THREE FEET BETWEEN THE OUTSIDE OF THE WATERMAIN AND THE OUTSIDE OF ANY EXISTING OR PROPOSED STORM SEWER, STORMWATER FORCE MAIN, OR PIPELINE CONVEYING RECLAIMED WATER REGULATED UNDER PART III OF CHAPTER 62-610, F.A.C.

2. NEW OR RELOCATED, UNDERGROUND WATER MAINS SHALL BE LAID TO PROVIDE HORIZONTAL DISTANCE OF AT LEAST THREE FEET, AND PREFERABLY TEN FEET, BETWEEN THE OUTSIDE OF THE WATER MAIN AND THE OUTSIDE OF ANY EXISTING OR PROPOSED VACUUM-TYPE SANITARY SEWER.

3. NEW OR RELOCATED, UNDERGROUND WATER MAINS SHALL BE LAID TO PROVIDE A HORIZONTAL DISTANCE OF AT LEAST SIX FEET, AND PREFERABLY TEN FEET, BETWEEN THE OUTSIDE OF THE WATER MAIN AND THE OUTSIDE OF ANY EXISTING OR PROPOSED GRAVITY-OR PRESSURE-TYPE SANITARY SEWER, WASTEWATER FORCE MAIN, OR PIPELINE CONVEYING RECLAIMED WATER NOT REGULATED UNDER PARTIII OF CHAPTER 62-610, F.A.C. THE MINIMUM HORIZONTAL SEPARATION DISTANCE BETWEEN WATER MAINS AND GRAVITY-TYPE SANITARY SEWERS SHALL BE REDUCED TO THREE FEET WHERE THE BOTTOM OF THE WATER MAIN IS LAID AT LEAST SIX INCHES ABOVE THE TOP OF THE SEWER.

4. NEW OR RELOCATED, UNDERGROUND WATER MAINS SHALL BE LAID TO PROVIDE A HORIZONTAL DISTANCE OF AT LEAST TEN FEET BETWEEN THE OUTSIDE OF THE WATER MAIN AND ALL PARTS OF ANY EXISTING OR PROPOSED "ON-SITE SEWAGE TREATMENT AND DISPOSAL SYSTEM" AS DEFINED IN SECTION 381.0065(2), F.S., AND RULE 64E-6002, F.A.C.

5. WHERE AN UNDERGROUND WATER MAIN IS BEING LAID LESS THAN THE REQUIRED MINIMUM HORIZONTAL DISTANCE FROM ANOTHER PIPELINE AND WHERE AN UNDERGROUND WATER MAIN IS CROSSING ANOTHER PIPELINE AND JOINTS IN THE WATER MAIN ARE BEING LOCATED LESS THAN THE REQUIRED MINIMUM DISTANCE FROM JOINTS IN OTHER PIPELINE.
   A. USE OF PRESSURE-RATED PIPE CONFORMING TO THE AMERICAN WATER WORKS ASSOCIATION STANDARDS INCORPORATED INTO RULE 62-555.330, F.A.C., FOR THE OTHER PIPELINE IF IT IS GRAVITY-OR VACUUM-TYPE PIPELINE;
   B. USE WELDED, FUSED OR OTHERWISE RESTRAINED JOINTS FOR EITHER WATER MAIN OR THE OTHER PIPELINE; OR
   C. USE OF WATERTIGHT CASING PIPE OR CONCRETE ENCASEMENT AT LEAST FOUR INCHES THICK FOR EITHER THE WATER MAIN OR THE OTHER PIPELINE.

ISSUE DATE 03-28-03 2 OF 3 NOT TO SCALE

GRANT & DZURO Engineers Surveyors Planners
1071 Canal Street The Villages, FL 32159
Tel No. (352)753-6260 Fax No. (352)753-6264

REVISIONS 12-17-09 3-1-13

TYPICAL UTILITY NOTES

PAGE W-2

5

POTABLE WATER CLEARANCE REQUIREMENTS

VERTICAL SEPARATION: BETWEEN UNDERGROUND WATER MAINS AND SANITARY OR STORM SEWERS, WASTEWATER OR STORMWATER FORCE MAIN, RECLAIMED WATER PIPELINES.

1. NEW OR RELOCATED, UNDERGROUND WATER MAINS CROSSING ANY EXISTING OR PROPOSED GRAVITY-OR VACUUM-TYPE SANITARY SEWER OR STORM SEWER SHALL BE LAID SO THE OUTSIDE OF THE WATER MAIN IS AT LEAST SIX INCHES, AND PREFERABLY 12 INCHES, ABOVE OR AT LEAST 12 INCHES BELOW THE OUTSIDE OF THE OTHER PIPELINE; HOWEVER, IT IS PREFERABLE TO LAY THE WATER MAIN ABOVE THE OTHER PIPELINE.

2. NEW OR RELOCATED, UNDERGROUND WATER MAINS CROSSING ANY EXISTING OR PROPOSED PRESSURE-TYPE SANITARY SEWER, WASTEWATER OR STORMWATER FORCE MAIN, OR PIPELINE CONVEYING RECLAIMED WATER SHALL BE LAID SO THE OUTSIDE OF THE WATER MAIN IS AT LEAST 12 INCHES ABOVE OR BELOW THE OUTSIDE OF THE OTHER PIPELINE. HOWEVER, IT IS PREFERABLE TO LAY THE WATER MAIN ABOVE THE OTHER PIPELINE.

3. AT THE UTILITY CROSSINGS DESCRIBED IN PARAGRAPHS 1 AND 2 ABOVE, ONE FULL LENGTH OF WATER MAIN PIPE SHALL BE CENTERED ABOVE OR BELOW THE OTHER PIPELINE SO THE WATER MAIN JOINTS WILL BE AS FAR AS POSSIBLE FROM THE OTHER PIPELINE. ALTERNATIVELY, AT SUCH CROSSINGS, THE PIPES SHALL BE ARRANGED SO THAT ALL WATER MAIN JOINTS ARE AT LEAST THREE FEET FROM ALL JOINTS IN VACUUM-TYPE SANITARY SEWERS, STORMSEWERS, STORMWATER FORCE MAINS, OR PIPELINES CONVEYING RECLAIMED WATER REGULATED UNDER PART III OF CHAPTER 62-610, F.A.C. AND AT LEAST SIX FEET FROM ALL JOINTS IN GRAVITY-OR PRESSURE-TYPE SANITARY SEWERS, WASTEWATER FORCE MAINS, OR PIPELINES CONVEYING RECLAIMED WATER NOT REGULATED UNDER PART III OF CHAPTER 62-610, F.A.C.

4. SEPARATION BETWEEN WATER MAINS AND SANITARY OR STORM SEWER MANHOLES.
   A. NO WATER MAIN SHALL PASS THROUGH, OR COME IN CONTACT WITH, ANY PART OF A SANITARY MANHOLE.
   B. WATER MAINS SHALL NOT BE CONSTRUCTED OR ALTERED TO PASS THROUGH, OR COME INTO CONTACT WITH ANY PART OF A STORM SEWER MANHOLE OR INLET STRUCTURE.

5. WHERE AN UNDERGROUND WATER MAIN IS BEING LAID LESS THAN THREE FEET HORIZONTALLY FROM ANOTHER PIPELINE AND WHERE AN UNDERGROUND WATER MAIN IS CROSSING ANOTHER PIPELINE AND IS BEING LAID LESS THAN THE REQUIRED MINIMUM VERTICAL DISTANCE FROM THE OTHER PIPELINE:
   A. USE OF PIPE, OR CASING PIPE, HAVING HIGH IMPACT STRENGTH (I.E., HAVING AN IMPACT STRENGTH AT LEAST EQUAL TO THAT OF 0.25-INCH-THICK DUCTILE IRON PIPE) OR CONCRETE ENCASEMENT AT LEAST FOUR INCHES THICK FOR THE WATER MAIN; AND
   B. USE OF PIPE, OR CASING PIPE, HAVING HIGH IMPACT STRENGTH (I.E., HAVING AN IMPACT STRENGTH AT LEAST EQUAL TO THAT OF 0.25-INCH-THICK DUCTILE IRON PIPE) OR CONCRETE ENCASEMENT AT LEAST FOUR INCHEST THICK FOR THE OTHER PIPELINE IF IT IS NEN AND IS CONVEYING WASTEWATER OR RECLAIMED WATER.

ISSUE DATE 03-28-03 3 OF 3 NOT TO SCALE

GRANT & DZURO Engineers Surveyors Planners
1071 Canal Street The Villages, FL 32159
Tel No. (352)753-6260 Fax No. (352)753-6264

REVISIONS 01-15-04 3-1-13

TYPICAL UTILITY NOTES

PAGE W-2

6

Littlejohn
An S&ME Company
1615 Edgewater Drive, Suite 200, ORLANDO, FLORIDA 32804
T 407.975.1273 F 407.975.1278 www.leainc.com
Christopher S. Grammier, P.E. 69919
Jay R. Hood PLA LA0001277
Florida Firm Registration No. 28050

SPR GROUP OF FLORIDA, INC.
913 VENTURE AVENUE, SUITE #1
LEESBURG, FL 34748
(352) 801-7992

PERMIT DOCUMENTS
SPRG LADY LAKE - OUTPATIENT CLINICAL BUILDING
LADY LAKE, LAKE COUNTY, FLORIDA

NO.	DATE	DESCRIPTION	BY	CHK	APV
1	3/21/16	LADY LAKE SUBMITTAL	CV	GH	CG

PROJECT NUMBER 20150902

DRAWING NUMBER C9.2

DRAWING NAME VCSA DETAILS

G:\Projects\2015\20150902\dwg\Construction\20150902_C9-0_CIT.dwg-C9-2 City Details May 09, 2016 CGrammier

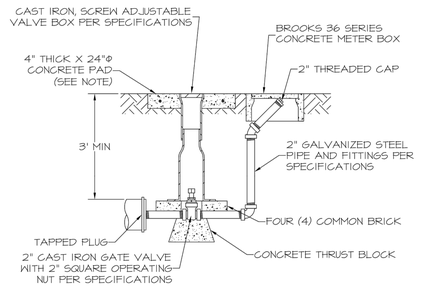

NOTE: IN RESIDENTIAL AREAS ONLY, VALVE BOX CONCRETE COLLARS ARE NOT REQUIRED. TWO INCH (2") DIAMETER BRASS DISCS SHALL BE GLUED TO THE CLOSEST CURB INDICATING THE DIRECTION TO THE VALVE. GENERALLY, 2 DISCS SHALL BE REQUIRED FOR EACH VALVE (90° APART).

ISSUE DATE 03-28-03 NOT TO SCALE

GRANT & DZURO Engineers Surveyors Planners
1071 Canal Street The Villages, FL 32162
Tel No. (352)753-6260 Fax No. (352)753-6264

REVISIONS 8-23-03 3-23-04

2" BLOWOFF VALVE DETAIL

PAGE W-3

1

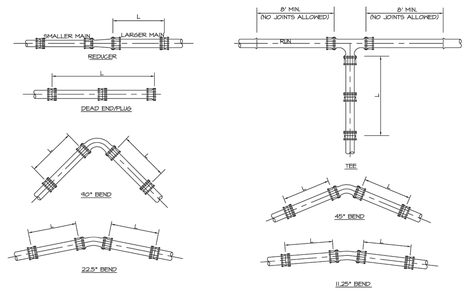

THRUST RESTRAINT DETAILS
N.T.S.

PIPE SIZE (INCHES)	FITTINGS (LENGTH IN FEET) (3-FT. COVER, 200 PSI TEST PRESSURE) 90° BEND P.V.C. (L)	45° BEND P.V.C. (L)	22.5 BEND P.V.C. (L)	11.25 BEND P.V.C. (L)	DEAD END & PLUG P.V.C. (L)	DESIGN PRESSURE PSI. P.V.C. (L)
4	40'	20'	20'	20'	40'	150
6	60'	40'	20'	20'	60'	150
8	80'	40'	20'	20'	80'	150
10	80'	40'	20'	20'	80'	150
12	100'	40'	20'	20'	100'	150

NOTE: PROVIDE RESTRAINED JOINTS AT CHANGES IN DIRECTION OF ALL WATER MAINS. RESTRAIN ALL PIPE JOINTS WITHIN THE DISTANCES SHOWN IN THE FOLLOWING TABLE. DISTANCES APPLY TO LENGTHS OF PIPE ON EACH SIDE OF THE FITTING. TEES AND DEAD ENDS VALVED OR CAPPED ARE CONSIDERED EQUIVALENT TO 90 DGS. BENDS. (LENGTHS ARE BASED ON SOIL OF "TYPE 2 CLAY" BACKFILL AND UP TO 200 PSI TEST PRESSURE) JOINT RESTRAINTS SHALL BE MEGA-LUG.

ISSUE DATE 03-28-03 2 OF 3 NOT TO SCALE

GRANT & DZURO Engineers Surveyors Planners
1071 Canal Street The Villages, FL 32162
Tel No. (352)753-6260 Fax No. (352)753-6264

REVISIONS 1-15-04 3-23-04 3-1-13

PIPE JOINT THRUST RESTRAINT DETAIL

PAGE W-5

2

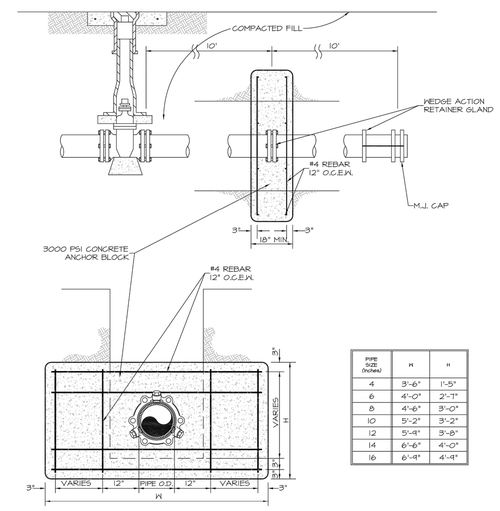

PIPE SIZE (inches)	H	H
4	3'-6"	1'-5"
6	4'-0"	2'-7"
8	4'-6"	3'-0"
10	5'-2"	3'-2"
12	5'-4"	3'-8"
14	6'-6"	4'-0"
16	6'-4"	4'-4"

ISSUE DATE 03-23-04 3 OF 3 NOT TO SCALE

GRANT & DZURO Engineers Surveyors Planners
1071 Canal Street The Villages, FL 32162
Tel No. (352)753-6260 Fax No. (352)753-6264

REVISIONS

PIPE JOINT THRUST RESTRAINT DETAIL

PAGE W-5

3

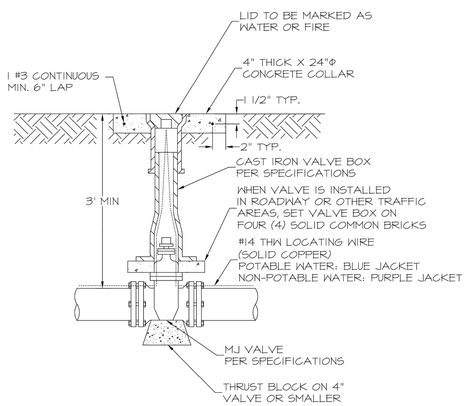

NOTE: IN RESIDENTIAL AREAS ONLY, VALVE BOX CONCRETE COLLARS ARE NOT REQUIRED. TWO INCH (2") DIAMETER BRASS DISCS SHALL BE GLUED TO THE CLOSEST CURB INDICATING THE DIRECTION TO THE VALVE. GENERALLY, 2 DISCS SHALL BE REQUIRED FOR EACH VALVE (90° APART).

ISSUE DATE 03-28-03 NOT TO SCALE

GRANT & DZURO Engineers Surveyors Planners
1071 Canal Street The Villages, FL 32162
Tel No. (352)753-6260 Fax No. (352)753-6264

REVISIONS 10-14-04

GATE VALVE & BOX DETAIL

PAGE W-6

4

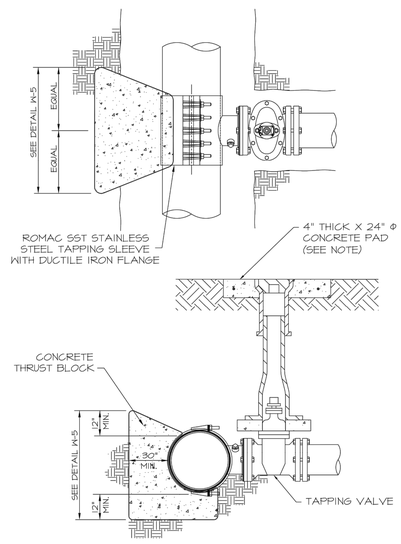

NOTE: IN RESIDENTIAL AREAS ONLY, VALVE BOX CONCRETE COLLARS ARE NOT REQUIRED. TWO INCH (2") DIAMETER BRASS DISCS SHALL BE GLUED TO THE CLOSEST CURB INDICATING THE DIRECTION TO THE VALVE. GENERALLY, 2 DISCS SHALL BE REQUIRED FOR EACH VALVE (90° APART).

ISSUE DATE 6-30-06 NOT TO SCALE

GRANT & DZURO Engineers Surveyors Planners
1071 Canal Street The Villages, FL 32162
Tel No. (352)753-6260 Fax No. (352)753-6264

REVISIONS 3-23-04

TAPPING SLEEVE & VALVE DETAIL

PAGE W-7

5

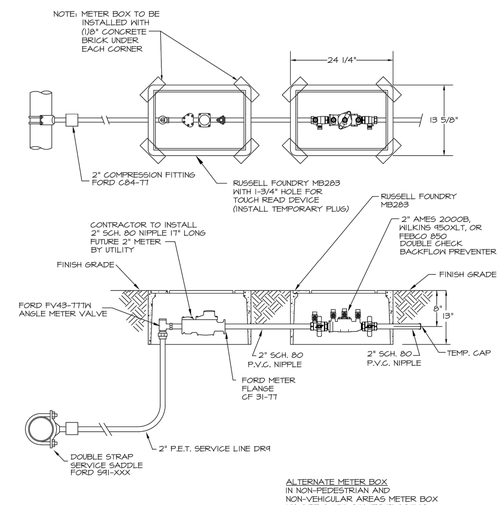

ALTERNATE METER BOX
IN NON-PEDESTRIAN AND NON-VEHICULAR AREAS METER BOX MAY BE A MID STATES PLASTICS MSBCF 1324-12

ISSUE DATE 03-28-03 NOT TO SCALE

The Villages

REVISIONS 8-23-03 3-23-04 4-15-11 10-28-15

2" COMMERCIAL WATER METER ASSEMBLY DETAIL

PAGE W-26

6

Littlejohn An S&ME Company
1615 Edgewater Drive, Suite 200, ORLANDO, FLORIDA 32804
T 407.975.1273 F 407.975.1278 www.leainc.com
Christopher S. Grammier, P.E. 69919
Jay R. Hood PLA LA0001277
Florida Firm Registration No. 28050

SPR GROUP OF FLORIDA, INC.
913 VENTURE AVENUE, SUITE #1
LEESBURG, FL 34748
(352) 801-7992

PERMIT DOCUMENTS
SPRG LADY LAKE - OUTPATIENT CLINICAL BUILDING
LADY LAKE, LAKE COUNTY, FLORIDA

NO.	DATE	DESCRIPTION	BY	CHK	APV
1	3/21/16	LADY LAKE SUBMITTAL	CV	GH	CG

PROJECT NUMBER 20150902

DRAWING NUMBER C9.3

DRAWING NAME VCSA DETAILS

G:\Projects\2015\20150902\dwg\Construction\20150902_C9-0_CIT.dwg-C9-3 City Details May 09, 2016 CGrammier

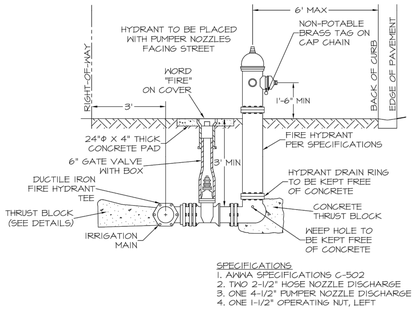

SPECIFICATIONS
1. AWWA SPECIFICATIONS C-502
2. TWO 2-1/2" HOSE NOZZLE DISCHARGE
3. ONE 4-1/2" PUMPER NOZZLE DISCHARGE
4. ONE 1-1/2" OPERATING NUT, LEFT

ISSUE DATE 11-09-11 NOT TO SCALE

GRANT & DZURO Engineers Surveyors Planners
1071 Canal Street The Villages, FL 32162
Tel No. (352)753-6260 Fax No. (352)753-6264

REVISIONS

COMMERCIAL FIRE HYDRANT ASSEMBLY DETAIL

PAGE W-23

1

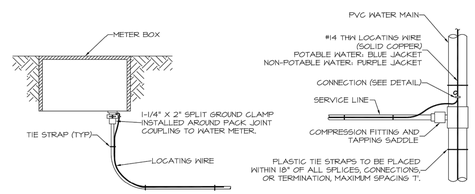

SERVICE AND METER

CONNECTION TO PVC MAIN

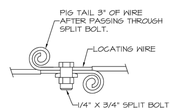

LOCATING WIRE SPLICING

NOTES:

1. THE ENDS OF ALL LOCATING WIRES, WHETHER THEY ARE SPLICED, CONNECTED, OR TERMINATED, SHALL HAVE THE LAST THREE INCHES PIG TAILED AS DETAILED HEREON.
2. AFTER INSTALLATION OF THE LOCATING WIRE THE SYSTEM SHALL BE SUBJECTED TO TESTING, PRIOR TO BACK FILL, IN ORDER TO ESTABLISH THAT THE SYSTEM IS FUNCTIONAL.

ISSUE DATE 03-28-03 NOT TO SCALE

GRANT & DZURO Engineers Surveyors Planners
1071 Canal Street The Villages, FL 32162
Tel No. (352)753-6260 Fax No. (352)753-6264

REVISIONS 8-23-03

WATER SERVICE LOCATING WIRE DETAIL

PAGE W-8

2

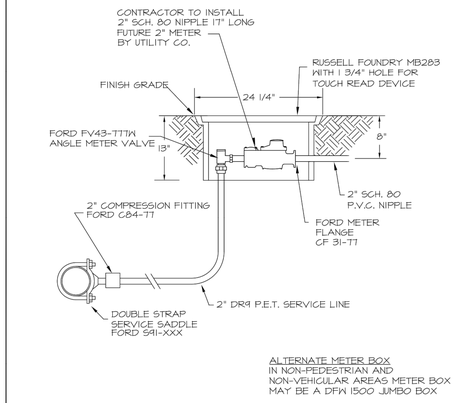

ALTERNATE METER BOX
IN NON-PEDESTRIAN AND NON-VEHICULAR AREAS METER BOX MAY BE A DFW 1500 JUMBO BOX

ISSUE DATE 03-28-03 NOT TO SCALE

GRANT & DZURO Engineers Surveyors Planners
1071 Canal Street The Villages, FL 32162
Tel No. (352)753-6260 Fax No. (352)753-6264

REVISIONS 3-23-09 4-15-11

2" IRRIGATION METER ASSEMBLY DETAIL

PAGE W-46

3

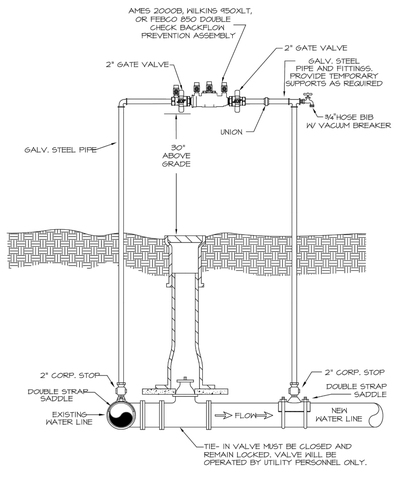

ISSUE DATE 07-11-03 NOT TO SCALE

GRANT & DZURO Engineers Surveyors Planners
1071 Canal Street The Villages, FL 32162
Tel No. (352)753-6260 Fax No. (352)753-6264

REVISIONS

TEMPORARY JUMPER DETAIL

PAGE W-50

4

5

6

Littlejohn
An S&ME Company
1615 Edgewater Drive, Suite 200, ORLANDO, FLORIDA 32804
T 407.975.1273 F 407.975.1278 www.leainc.com
Christopher S. Grammier, P.E. 69919
Jay R. Hood PLA LA0001277
Florida Firm Registration No. 28050

SPR GROUP OF FLORIDA, INC.
913 VENTURE AVENUE, SUITE #1
LEESBURG, FL 34748
(352) 801-7992

PERMIT DOCUMENTS
SPRG LADY LAKE - OUTPATIENT CLINICAL BUILDING
LADY LAKE, LAKE COUNTY, FLORIDA

NO.	DATE	DESCRIPTION	BY	CHK	APV
1	3/21/16	LADY LAKE SUBMITTAL	CV	GH	CG

PROJECT NUMBER
20150902

DRAWING NUMBER
C9.4

DRAWING NAME
VCSA DETAILS

G:\Projects\2015\20150902\dwg\Construction\20150902_C9-0_CIT.dwg-C9-4 City Details May 09, 2016 CGrammier

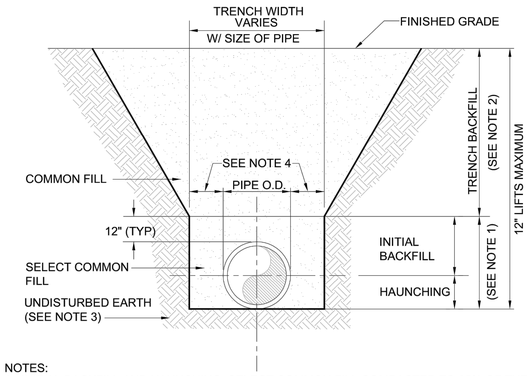

NOTES:
1. INITIAL BACKFILL AND HAUNCHING: SELECT COMMON FILL COMPACTED TO 95% OF THE MAXIMUM DENSITY AS PER AASHTO T-180.
2. TRENCH BACKFILL: COMMON FILL COMPACTED TO 95% OF THE MAXIMUM DENSITY AS PER AASHTO T-180.
3. PIPE BEDDING UTILIZING SELECT COMMON FILL OR BEDDING ROCK IN ACCORDANCE WITH TYPE A BEDDING AND TRENCHING DETAIL MAY BE REQUIRED AS DIRECTED BY UTILITIES.
4. 15" MAX. (12" MIN.) FOR PIPE DIAMETER LESS THAN 24" AND 24" MAX (12" MIN) FOR PIPE DIAMETER 24" AND LARGER.
5. WATER SHALL NOT BE PERMITTED IN THE TRENCH DURING CONSTRUCTION.
6. ALL PIPE TO BE INSTALLED WITH BELL FACING UPSTREAM TO THE DIRECTION OF THE FLOW.
7. FINAL RESTORATION IN IMPROVED AREAS SHALL BE IN COMPLIANCE WITH ALL APPLICABLE REGULATIONS OF GOVERNING AGENCIES. SURFACE RESTORATION WITHIN TOWN OF LADY LAKE RIGHT-OF-WAY SHALL COMPLY WITH REQUIREMENTS OF RIGHT-OF-WAY UTILIZATION REGULATIONS AND ROAD CONSTRUCTION SPECIFICATIONS.

TOWN OF LADY LAKE
CONSTRUCTION STANDARD DETAILS
BEDDING AND TRENCHING - TYPE B
DATE: FEB. 2009 | FIGURE E102

1

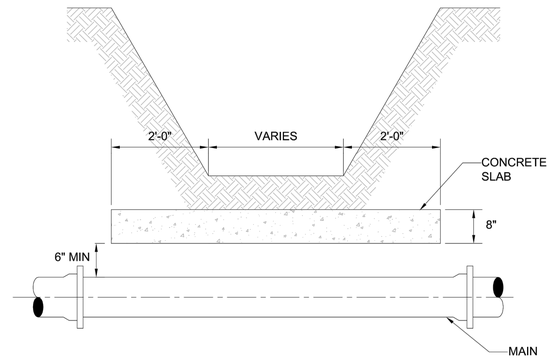

NOTES:
1. MAIN SHALL BE A CONTINUOUS LENGTH OF PIPE TO EXTEND 2 FEET MINIMUM EITHER SIDE OF THE DRAINAGE DITCH, WITH NO FITTING OR JOINTS WITHIN THE DITCH.
2. CONCRETE SLAB SHALL BE 2' WIDER THAN THE PIPE O.D. AND A MINIMUM WIDTH OF 4'.
3. CONCRETE IS NOT REQUIRED IF COVER IS GREATER THAN 3' OR SWALE DEPTH IS LESS THAN 2'.
4. CONCRETE SHALL BE 2500 PSI COMPRESSIVE STRENGTH WITH FIBERMESH REINFORCEMENT.

TOWN OF LADY LAKE
CONSTRUCTION STANDARD DETAILS
CANAL, DRAINAGE DITCH OR SWALE CROSSING
DATE: FEB. 2009 | FIGURE E103

2

MINIMUM LENGTH (FT) TO BE RESTRAINED ON EACH SIDE OF FITTING(S)

TYPE	PIPE SIZE									
	4"	6"	8"	10"	12"	16"	20"	24"	30"	36"
90° BEND	20	29	37	44	51	65	77	89	105	120
45° BEND	8	12	15	18	21	27	32	37	44	50
22-1/2° BEND	4	6	7	9	10	13	15	18	21	24
11-1/4° BEND	2	3	4	5	6	7	8	9	10	12
PLUG OR BRANCH OF TEE	42	59	77	93	108	138	166	194	231	265
VALVE	21	30	39	47	54	69	83	97	116	133

NOTES:
1. FITTINGS SHALL BE RESTRAINED JOINTS UNLESS OTHERWISE INDICATED.
2. INSTALL FULL LENGTH JOINTS WITH TOTAL LENGTH EQUAL TO OR GREATER THAN SHOWN IN THE TABLE.
3. WHERE TWO OR MORE FITTINGS ARE TOGETHER, USE FITTING WHICH YIELDS GREATEST LENGTH OF RESTRAINED PIPE.
4. ALL LINE VALVES AND THROUGH RUN OF TEES SHALL BE RESTRAINED.
5. LENGTHS SHOWN IN THE TABLE HAVE BEEN CALCULATED IN ACCORDANCE WITH THE PROCEDURE OUTLINED IN "THRUST RESTRAINT DESIGN FOR DUCTILE IRON PIPE" AS PUBLISHED BY DIPRA, WITH THE FOLLOWING ASSUMPTIONS:
   WORKING PRESSURE: 150 PSI
   SOIL DESIGNATION: SM (SAND SILT)
6. FOR HDPE, PVC OR PIPE ENCASED IN POLYETHYLENE, INCREASE THE GIVEN VALUE BY A FACTOR OF 1.5.

TOWN OF LADY LAKE
CONSTRUCTION STANDARD DETAILS
RESTRAINED PIPE TABLE WATER AND RECLAIMED WATER MAINS
DATE: FEB. 2009 | FIGURE E104-1

3

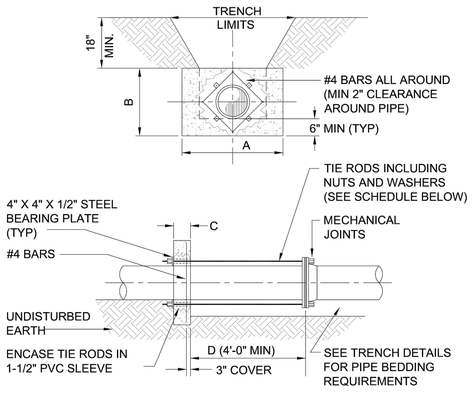

NOTES:
1. ADDITIONAL REINFORCEMENTS SHALL BE AS SPECIFIED BY THE ENGINEER.
2. MINIMUM COMPRESSIVE STRENGTH FOR CONCRETE SHALL BE 2500 PSI.
3. BEDDING, BACKFILL AND COMPACTION SHALL BE AS SPECIFIED ELSEWHERE IN THE STANDARD DRAWINGS.
4. ALL FORM BOARDS SHALL BE REMOVED PRIOR TO BACKFILL.
5. NO ALLOWANCE SHALL BE MADE FOR FRICTION BETWEEN THE PIPE WALL AND THE THRUST COLLAR.
6. DESIGN PRESSURE: 150 PSI.

SCHEDULE OF DIMENSIONS AND MATERIALS

PIPE SIZE (INCHES)	DIMENSIONS (FT.)				TIE RODS REQ'D	
	A	B	C	D	DIA.	NO.
6	2.0	2.0	1.0		3/4	2
8	2.5	2.5	1.0		3/4	2
10	3.5	3.0	1.0		3/4	2
12	5.0	3.0	1.0		3/4	2
16	6.0	4.0	1.5		3/4	4
20	8.0	5.0	1.5		3/4	6
24	9.0	6.0	1.5		3/4	8

NOTE: THRUST COLLAR AREAS TO BE COMPUTED ON BASIS OF 2,000 LBS/SF SOIL RESTRAINT BEARING.

TOWN OF LADY LAKE
CONSTRUCTION STANDARD DETAILS
THRUST COLLAR (150 psi) WATER AND RECLAIMED WATER MAINS
DATE: FEB. 2009 | FIGURE E105-1

4

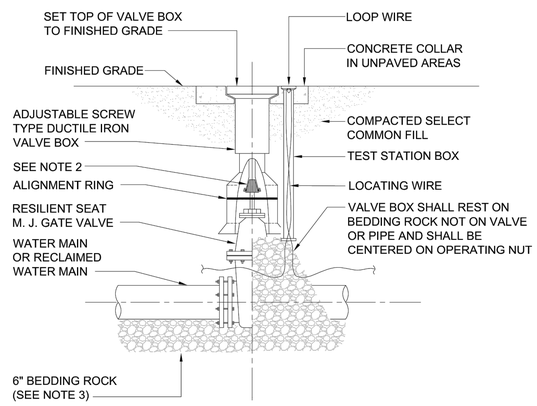

NOTES:
1. PVC PIPE OR DUCTILE IRON PIPE EXTENSIONS SHALL NOT BE USED ON VALVE BOX INSTALLATION.
2. THE VALVE ACTUATING NUT SHALL BE EXTENDED TO BE WITHIN 3' OF FINISHED GRADE.
3. BEDDING MATERIAL SHALL CONFORM TO FDOT NO. 57 AGGREGATE.
4. WIRE SHALL TERMINATE IN TEST STATION BOX.
5. REFER TO FIGURE A111 FOR INSTALLATIONS AT A DEPTH OF 6' OR GREATER.
6. VALVES SHALL BE AMERICAN AVK SERIES 25.

TOWN OF LADY LAKE
CONSTRUCTION STANDARD DETAILS
GATE VALVE AND BOX WATER AND RECLAIMED WATER MAINS
DATE: FEB. 2009 | FIGURE E107

5

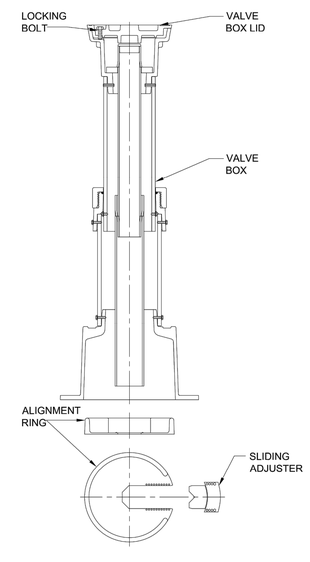

NOTES:
1. REQUIRED FOR ALL MAINS 6' DEEP OR GREATER.
2. REQUIRED FOR MAINS 16" IN DIAMETER OR GREATER REGARDLESS OF DEPTH.
3. VALVES DEEPER THAN 8 FT. MUST HAVE PERMANENT NUT EXTENSIONS INSTALLED TO A MINIMUM DEPTH OF 4 FT. BELOW GROUND.

TOWN OF LADY LAKE
CONSTRUCTION STANDARD DETAILS
ADJUSTABLE SEALED VALVE BOX
DATE: FEB. 2009 | FIGURE E111

6

Littlejohn
An S&ME Company
1615 Edgewater Drive, Suite 200, ORLANDO, FLORIDA 32804
T 407.975.1273 F 407.975.1278 www.leainc.com
Christopher S. Grammier, P.E. 69919
Jay R. Hood PLA LA0001277
Florida Firm Registration No. 28050

SPR GROUP OF FLORIDA, INC.
913 VENTURE AVENUE, SUITE #1
LEESBURG, FL 34748
(352) 801-7992

PERMIT DOCUMENTS
SPRG LADY LAKE - OUTPATIENT CLINICAL BUILDING
LADY LAKE, LAKE COUNTY, FLORIDA

NO.	DATE	DESCRIPTION	BY	CHK	APV
1	3/21/16	LADY LAKE SUBMITTAL	CV	GH	CG

PROJECT NUMBER
20150902

DRAWING NUMBER
C9.5

DRAWING NAME
LADY LAKE DETAILS

G:\Projects\2015\20150902\dwg\Construction\20150902_C9-0_CIT.dwg-C9-5 LadyLakeDetails May 09, 2016 CGrammier

1

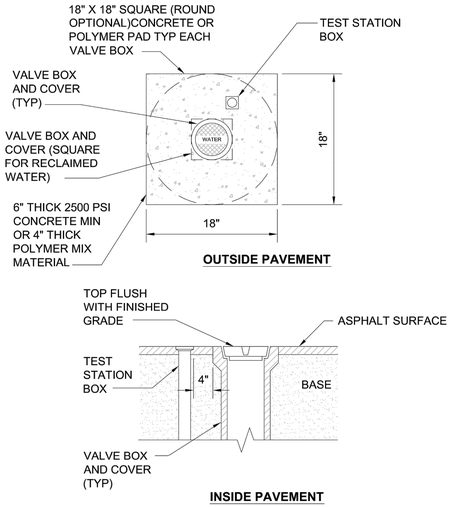

NOTES:
1. BRONZE IDENTIFICATION DISC SHALL BE REQUIRED FOR ALL VALVES.
2. LABEL TYPE AS WATER, SEWER OR RECLAIMED WATER.

TOWN OF LADY LAKE	TOWN OF LADY LAKE	VALVE COLLAR
	CONSTRUCTION STANDARD DETAILS	DATE: FEB. 2009 / FIGURE E112

2

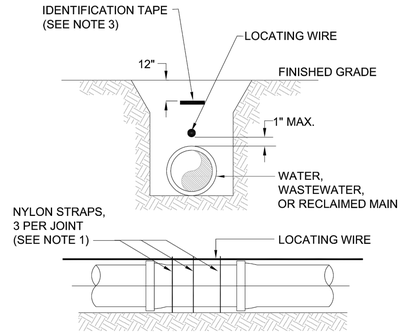

NOTES:
1. ALL PIPE SHALL REQUIRE INSULATED LOCATING WIRE (14 GAUGE SOLID COPPER) CAPABLE OF DETECTION BY A CABLE LOCATOR AND SHALL BE WRAPPED WITH NYLON STRAPS TO TOP CENTERLINE OF THE PIPE.
2. LOCATING WIRE SHALL TERMINATE INSIDE THE TEST STATION BOX AND SHALL EXTEND 12" ABOVE TOP OF COLLAR.
3. IDENTIFICATION TAPE SHALL BE MANUFACTURED OF POLYETHYLENE WITH A MINIMUM THICKNESS OF 4 MILS. TAPE WIDTH SHALL BE 3 INCHES AND SHALL HAVE BACKGROUND COLOR SPECIFIED BELOW, IMPRINTED WITH BLACK LETTERS. IMPRINT SHALL BE AS SPECIFIED BELOW AND SHALL REPEAT ITSELF A MINIMUM OF ONCE EVERY 2 FEET FOR ENTIRE LENGTH OF PIPE.
4. EARLY WARNING TAPE SHALL BE INSTALLED DIRECTLY ABOVE THE PIPE AT APPROXIMATELY 12-INCHES BELOW FINISHED GRADE AND SHALL HAVE THE FOLLOWING COLOR AND WARNING:

SERVICE TYPE	IMPRINT	BACKGROUND COLOR
WASTEWATER	"CAUTION-WASTEWATER LINE BURIED BELOW"	GREEN
POTABLE WATER	"CAUTION-POTABLE WATER LINE BURIED BELOW"	BLUE
RECLAIMED WATER	"CAUTION-RECLAIMED WATER LINE BURIED BELOW"	PURPLE

TOWN OF LADY LAKE	TOWN OF LADY LAKE	PIPE LOCATING WIRE
	CONSTRUCTION STANDARD DETAILS	DATE: FEB. 2009 / FIGURE E114

3

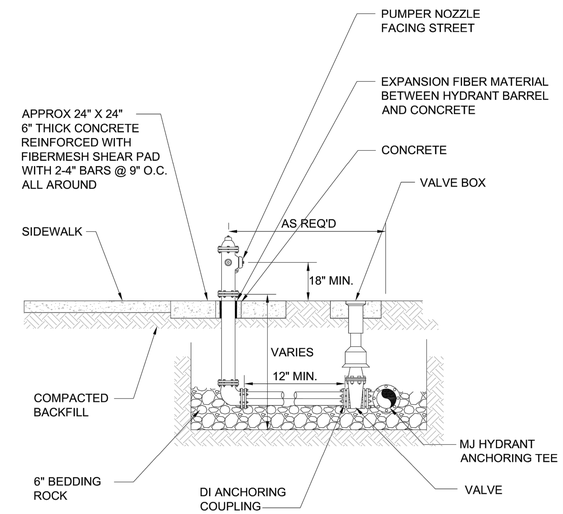

NOTES:
1. FIRE HYDRANT SHALL BE SUPPLIED WITHOUT A WEEP HOLE, OR WITH A PERMANENTLY PLUGGED WEEP HOLE.
2. ALL PIPE AND APPURTENANCES SHALL BE RESTRAINED.
3. ALL FIRE HYDRANT AND VALVES TO BE AUK, MUELER OR CLOW.

TOWN OF LADY LAKE	TOWN OF LADY LAKE	STANDARD DRAWINGS FIRE HYDRANT ASSEMBLY
	CONSTRUCTION STANDARD DETAILS	DATE: FEB. 2009 / FIGURE E203

4

Other Pipe	Horizontal Separation	Crossings (1)	Joint Spacing @ Crossings (Full Joint Centered)
Storm Sewer, Stormwater Force Main, Reclaimed Water (2)	Water Main; 3 ft. minimum	Water Main; 12 inches is the minimum, except for storm sewer, then 6 inches is the minimum and 12 inches is preferred	Alternate 3 ft. minimum; Water Main
Vacuum Sanitary Sewer	Water Main; 10 ft. preferred; 3 ft. minimum	Water Main; 12 inches preferred; 6 inches minimum	Alternate 3 ft. minimum; Water Main
Gravity or Pressure Sanitary Sewer, Sanitary Sewer Force Main, Reclaimed Water (4)	Water Main; 10 ft. preferred; 6 ft. minimum (3)	Water Main; 12 inches is the minimum, except for gravity sewer, then 6 inches is the minimum and 12 inches is preferred	Alternate 6 ft. minimum; Water Main
On-Site Sewage Treatment & Disposal System	10 ft. minimum	---	---

(1) Water main should cross above other pipe. When water main must be below other pipe, the minimum separation is 12 inches.
(2) Reclaimed water regulated under Part III of Chapter 62-610, F.A.C.
(3) 3 ft. for gravity sanitary sewer where the bottom of the water main is laid at least 6 inches above the top of the gravity sanitary sewer.
(4) Reclaimed water not regulated under Part III of Chapter 62-610, F.A.C.

Disclaimer - This document is provided for your convenience only. Please refer to F.A.C. Rule 62-555.314 for additional construction requirements.

TOWN OF LADY LAKE	TOWN OF LADY LAKE	LOCATION OF PUBLIC WATER SYSTEM MAINS IN ACCORDANCE WITH F.A.C. RULE 62-555.314
	CONSTRUCTION STANDARD DETAILS	DATE: APRIL 2009 / FIGURE E116

Littlejohn
An S&ME Company
1615 Edgewater Drive, Suite 200, ORLANDO, FLORIDA 32804
T 407.975.1273 F 407.975.1278 www.leainc.com
Christopher S. Grammier, P.E. 69919
Jay R. Hood PLA LA0001277
Florida Firm Registration No. 28050

SPR GROUP OF FLORIDA, INC.
913 VENTURE AVENUE, SUITE #1
LEESBURG, FL 34748
(352) 801-7992

PERMIT DOCUMENTS
SPRG LADY LAKE - OUTPATIENT CLINICAL BUILDING
LADY LAKE, LAKE COUNTY, FLORIDA

NO.	DATE	DESCRIPTION	BY	CHK	APV
1	3/21/16	LADY LAKE SUBMITTAL	CV	GH	CG

PROJECT NUMBER
20150902

DRAWING NUMBER
C9.6

DRAWING NAME
LADY LAKE DETAILS

G:\Projects\2015\20150902\dwg\Construction\20150902_C9-0_CIT.dwg C9-6 LadyLakeDetails May 09, 2016 CGrammier

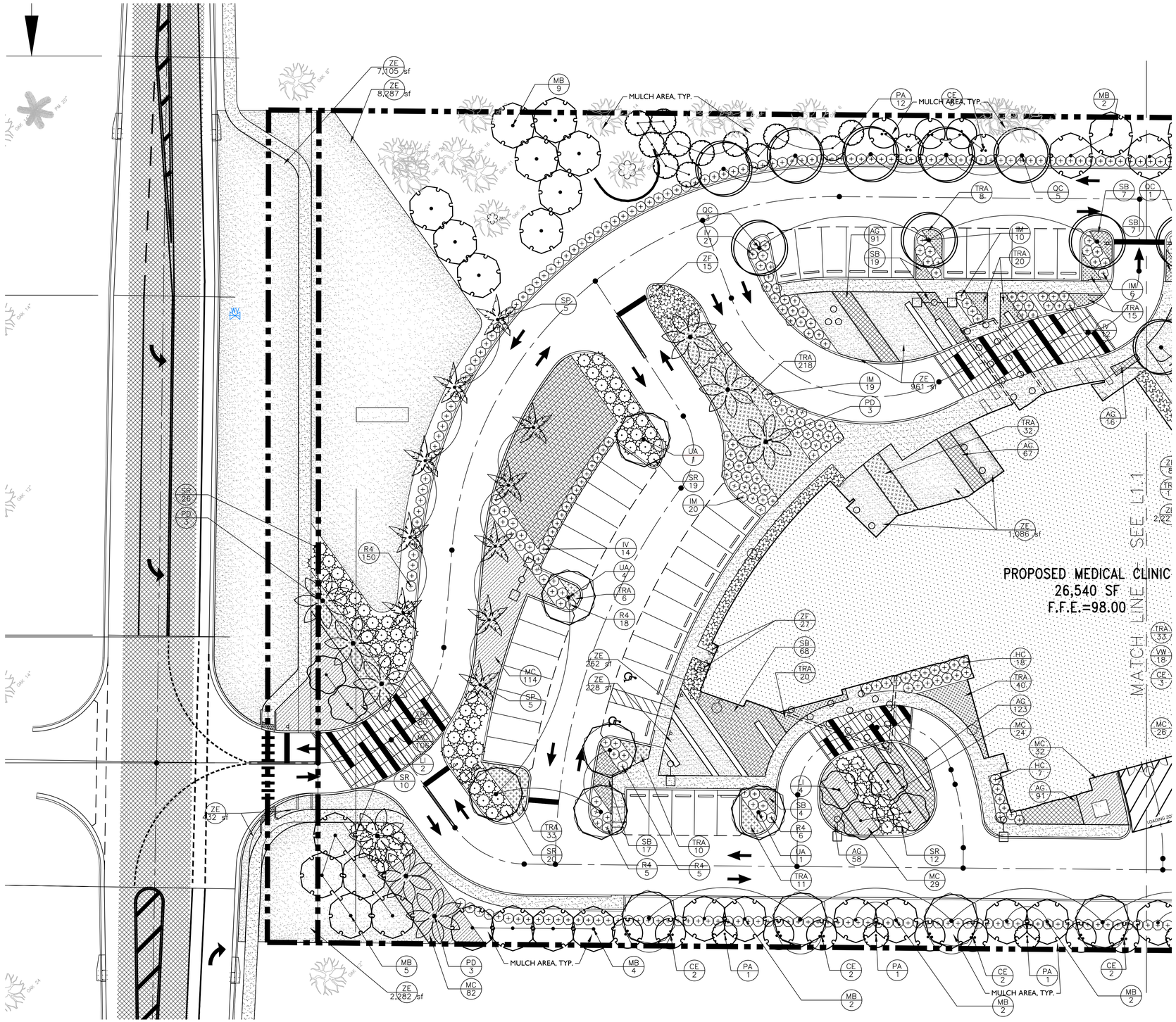

LANDSCAPE DATA

SITE DEVELOPMENT ACREAGE: 6.25 AC

LANDSCAPE BUFFER REQUIREMENTS (PER 100'):
6 CANOPY TREES, 4 UNDERSTORY TREES, CONTINUOUS HEDGE

SITE TREE DENSITY CALCULATIONS

ACREAGE:	6.25 AC
EXISTING TREES TO BE REMOVED:	28" TOTAL (3 TREES)
EXISTING TREES TO BE PRESERVED:	271" TOTAL (15 TREES)

TREE DENSITY UNITS REQUIRED:

160" PER ACRES		1,000" TOTAL
EXISTING TREES:		271"
TOTAL REQUIRED:		729" TOTAL

TREES PROVIDED:

CANOPY TREES:	104 at 4" each = 416"	
PALM TREES:	19 at 8" each = 152"	
UNDERSTORY TREES:	67 at 2.5" each = 167.5"	
TOTAL PROVIDED:		735.5" TOTAL

Littlejohn
An S&ME Company
1615 Edgewater Drive, Suite 200, ORLANDO, FLORIDA 32804
T 407.975.1273 F 407.975.1278 www.leainc.com
Christopher S. Grammier, P.E. 69919
Jay R. Hood PLA LA0001277
Florida Firm Registration No. 28050

PERMIT DOCUMENTS
SPRG LADY LAKE - OUTPATIENT CLINICAL BUILDING
LADY LAKE, LAKE COUNTY, FLORIDA

NO.	DATE	DESCRIPTION	BY	CHK	APV
1	4/14/16	LADY LAKE RESUBMITTAL	CR	TM	JH
2	3/21/16	LADY LAKE SUBMITTAL	CR	TM	JH

PROJECT NUMBER
20150902

DRAWING NUMBER
LI.0

DRAWING NAME
LANDSCAPE PLAN

Monday, May 09, 2016
G:\Projects\20150902\Drawings\Construction\20150902_L1-0_LAN.dwg-L1-0 Landscape Plan May 09, 2016 CGrammier

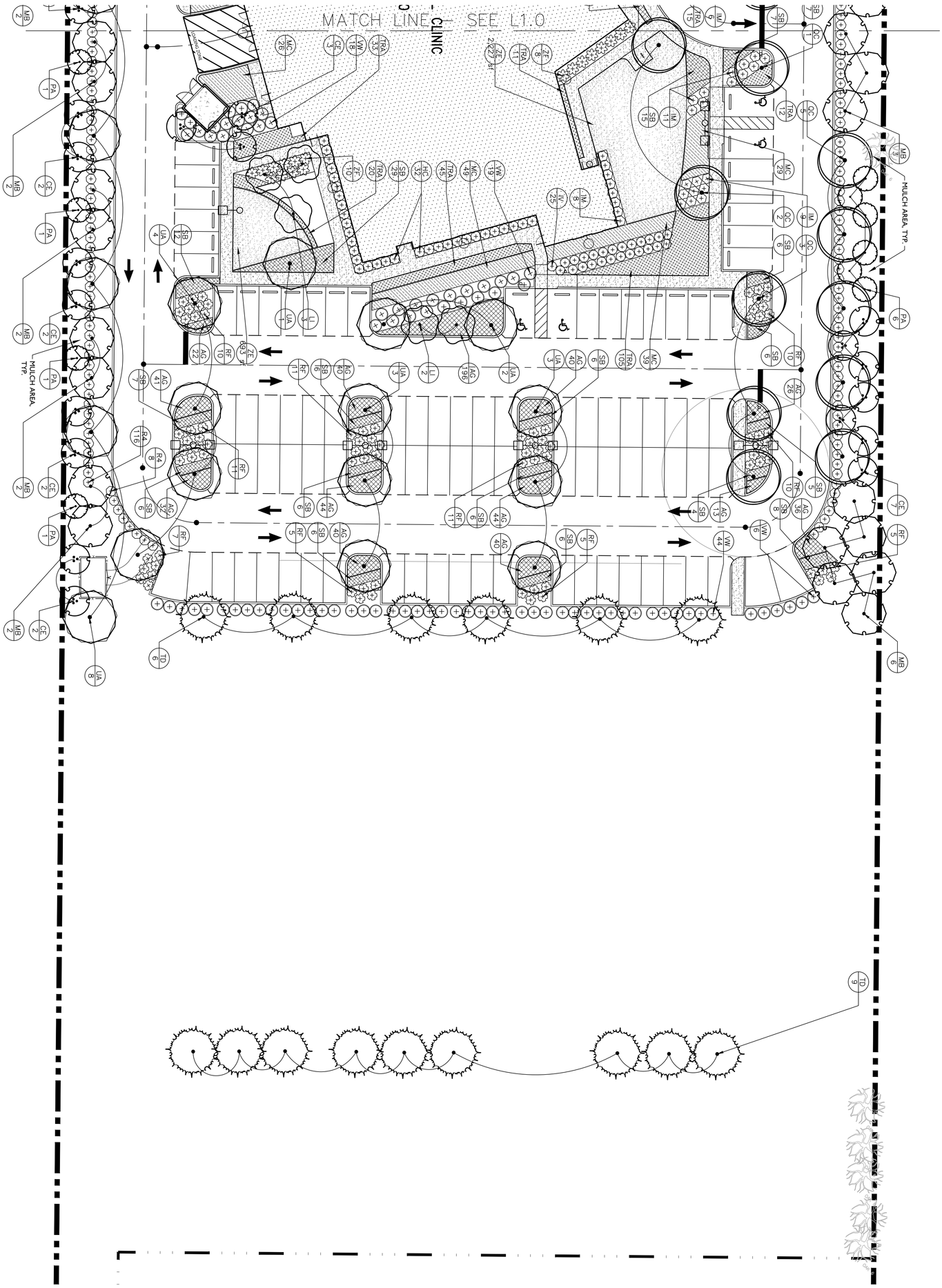

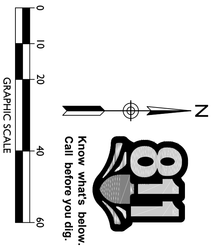

DRAWING NAME
LANDSCAPE PLAN

DRAWING NUMBER
L1.1

PROJECT NUMBER
20150902

NO.	DATE	DESCRIPTION	BY	CHK	APV
2	4/14/16	LADY LAKE RESUBMITTAL	CR	TM	JH
1	3/21/16	LADY LAKE SUBMITTAL	CR	TM	JH

PERMIT DOCUMENTS

SPRG LADY LAKE - OUTPATIENT CLINICAL BUILDING

LADY LAKE, LAKE COUNTY, FLORIDA

Littlejohn
An S&ME Company
1615 Edgewater Drive, Suite 200, ORLANDO, FLORIDA 32804
T 407.975.1273 F 407.975.1278 www.leainc.com
Christopher S. Grammier, P.E. 69919
Jay R. Hood PLA LA0001277
Florida Firm Registration No. 28050

NOTES

1. THE INSTALLATION OF PLANT MATERIAL SHALL COMPLY WITH ALL APPLICABLE CITY OF LADY LAKE LANDSCAPE AND TREE PROTECTION ORDINANCES. THE CONTRACTOR IS RESPONSIBLE FOR OBTAINING PERMITS ASSOCIATED WITH THIS WORK.
2. SEE PLANT LIST AND NOTES FOR ALL PLANT SPECIFICATIONS.
3. CANOPY TREES SHALL BE LOCATED SO THAT THE TRUNK IS LOCATED A MIN. OF 10'-0" FROM A BUILDING FACE OR ANY MAJOR ARCH. BUILDING FEATURE.
4. TREES LOCATED NEAR ANY STREETS SHALL COMPLY WITH ALL CLEAR ZONE REQUIREMENTS, REFER THE CIVIL ENGR'S. DWGS. FOR ALL SIGHT LINE INFORMATION.
5. ALL TREE PROTECTION AND PRESERVATION ACTIVITIES SHALL COMPLY WITH SECTION 10.5 OF THE CITY OF LADY LAKE CODE OF ORDINANCES. NO TREES ARE TO BE REMOVED AS PART OF THIS DEVELOPMENT.
6. THE CONTRACTOR SHALL VERIFY THE LOCATION OF ALL EXISTING UTILITIES PRIOR TO COMMENCEMENT OF CONSTRUCTION ACTIVITIES.
7. PLANT QUANTITIES ARE A GUIDE ONLY. CONTRACTOR SHALL VERIFY ALL QUANTITIES AND PROVIDE AN EVEN SHRUB COVERAGE AS DESCRIBED IN SPECIFICATIONS.
8. THE LANDSCAPE CONTRACTOR SHALL REPLACE ANY EXISTING PLANT MATERIAL DESIGNATED TO BE PRESERVED THAT IS DAMAGED DURING THE CONSTRUCTION PROCESS.
9. ALL PLANT MATERIAL SHALL MEET OR EXCEED THE STANDARDS OF FLORIDA NO 1 AS GIVEN IN "GRADES AND STANDARDS FOR NURSERY PLANTS 1998," STATE OF FLORIDA, DEPARTMENT OF AGRICULTURE, TALLAHASSEE, AND ANY AMENDMENTS THERETO.
10. THE LANDSCAPE ARCHITECT OR OWNER MAY REJECT ANY PLANT MATERIAL BROUGHT TO THE SITE WHICH HE DEEMS TO BE OF INFERIOR QUALITY OR APPEARANCE.
11. ALL PLANT BEDS SHALL BE TOP DRESSED WITH A MINIMUM OF 3" DEPTH PINE BARK MINI-NUGGET MULCH. MAINTAIN A 4" CLEAR SPACE BETWEEN MULCH AND TRUNKS OR PLANT STEMS. MULCH TO BE APPLIED NO DEEPER THAN ONE INCH OVER THE TOP OF TREE ROOTBALLS.
12. ALL TREES SHALL HAVE ALL SYNTHETIC BURLAP REMOVED FROM THE ENTIRE ROOT BALL. JUTE BURLAP SHALL BE REMOVED FROM THE TOP ONE-THIRD OF THE ROOT BALL. THE TOP THREE ROWS OF SQUARES ON ALL CAGES AROUND THE ROOT BALLS SHALL BE CLIPPED OFF AND REMOVED.
13. THE CONTRACTOR SHALL READ AND ADHERE TO ALL WRITTEN SPECIFICATIONS.
14. THE CONTRACTOR SHALL VISUALLY INSPECT THE SOILS CONDITION OF THE SITE. HE SHALL DIG A MINIMUM OF 12 TEST HOLES 3 FOOT DEEP RANDOMLY AROUND THE SITE. HE SHALL PERFORM PERCOLATION TESTS IN THESE HOLES FOR A PERIOD OF ONE HOUR EACH. THE HOLES SHALL BE FILLED WITH WATER AND IF THE HOLES HOLD MORE THAN 6" OF WATER AFTER ONE HOUR, THE LANDSCAPE ARCHITECT SHOULD BE NOTIFIED OF THE PROBLEM. THE CONTRACTOR SHALL RECOMMEND SUBSTITUTIONS OF PLANT MATERIAL AND PLANTING INSTALLATION TO ACCOMMODATE POOR DRAINING SOILS.
15. THE CONTRACTOR SHALL PROVIDE A SOIL TEST IN FOUR LOCATIONS AND PROVIDE RECOMMENDATIONS FOR AMENDMENTS BASED ON THE RESULTS. IMPROPER SOIL SHALL BE THE RESPONSIBILITY OF THE CONTRACTOR. THE CONTRACTOR SHALL RECTIFY ALL INCURRED DAMAGES AT NO ADDITIONAL COST TO THE OWNER.
16. THE CONTRACTOR SHALL REVIEW THE SOILS REPORT ON FILE WITH THE OWNER.
17. THE INSTALLATION OF PLANT MATERIAL SHALL BE VIEWED AS ACCEPTANCE BY THE CONTRACTOR OF EXISTING GRADES AS GIVEN TO HIM. THE CONTRACTOR SHALL PROVIDE TO THE LANDSCAPE ARCHITECT A WRITTEN LETTER OF ACCEPTABILITY OF GRADES. FAILURE TO DO SO WILL BE VIEWED AS AN ACCEPTANCE OF EXISTING GRADES BY THE CONTRACTOR.
18. THE CONTRACTOR SHALL BERM ALL PARKING LOT ISLANDS 12" ABOVE TOP OF CURB ELEVATION WITHOUT EXCEEDING A 4:1 SLOPE (TYPICAL).
19. WHERE LIGHT POLES AND TREES BOTH OCCUR IN A PARKING LOT ISLANDS, THE TREE SHALL BE SPACED A MINIMUM 10'-0" DISTANCE FROM THE POLE.
20. THE CONTRACTOR WILL BE REQUIRED TO SAND AREAS OF SOD THAT ARE NOT SMOOTHLY APPLIED TO ELIMINATE SMALL IRREGULARITIES IN GRADES. LARGE IRREGULARITIES IN GRADE WILL REQUIRE REGRADING & RESODDING.
21. THE CONTRACTOR IS RESPONSIBLE FOR MAINTENANCE OF THE SITE INCLUDING ALL MOWING, EDGING, TRIMMING, PRUNING & SPRAYING OF PESTICIDES & FUNGICIDES UNTIL THE TIME OF FINAL ACCEPTANCE BY THE OWNER.
22. ALL PLANT MATERIAL SHALL BE GUARANTEED ONE YEAR AFTER ACCEPTANCE BY OWNER
23. ALL TREES IN SOD TO BE IN A (4) FOOT MINIMUM MULCHED RING AROUND THE NEWLY PLANTED TREES
24. ALL TREES PLANTED IN SOD TO HAVE (10) INCH PLASTIC PROTECTOR AROUND TRUNK BASE TO PROTECT FROM MOWING DAMAGE.
25. TREES SHALL BE PLANTED SO THAT THE TRUNK FLARE IS EXPOSED AND TOPMOST ROOT IN THE ROOTBALL ORIGINATING FROM THE TRUNK IS AT SOIL SURFACE OR WITHIN THE TOP INCH OF SOIL ON THE ROOTBALL.
26. THE CITY SHALL REQUIRE THE CALIPER SIZE OF THE TREE AS SPECIFIED ON THE PLANT SCHEDULE.
27. REMOVAL OF ALL CONSTRUCTION DEBRIS, LIMEROCK, EXCESS OF BUILDERS SAND, CONCRETE AND MORTAR DEBRIS, EXISTING WEEDS AND GRASSES, AND ALL FOREIGN MATERIALS IN THE PLANTING BED AND SOD AREAS SHALL BE REMOVED AND 36" OF CLEAN FLORIDA FILL OF pH 5.5-6.5 SHALL BE INSTALLED PRIOR TO ANY INSTALLATION OF PLANTS.

PLANT SCHEDULE

TREES	CODE	QTY	BOTANICAL NAME	COMMON NAME	SIZE	
	CE	31	CERCIS CANADENSIS FULL PLANTS	EASTERN REDBUD MULTI–TRUNK	2–1/2" CAL.	
	LI	11	LAGERSTROEMIA INDICA 'NATCHEZ' STANDARD, MIN. 4' C.T.; CENTRAL LEADER	NATCHEZ CRAPE MYRTLE	2–1/2" CAL.	
	MB	43	MAGNOLIA GRANDIFLORA 'D.D. BLANCHARD' TM FULL PLANTS WITH CENTRAL LEADER	SOUTHERN MAGNOLIA	4" CAL.	
	PD	9	PHOENIX DACTYLIFERA 'MEDJOOL'	MEDJOOL DATE PALM	FIELD GROWN, 14' C.T. MIN EA, MATCHED	18' G.W., MATCHED, SPECIMEN
	PA	25	PRUNUS ANGUSTIFOLIA FULL PLANTS	CHICKASAW PLUM	2–1/2" CAL.	
	QC	19	QUERCUS VIRGINIANA 'CATHEDRAL' FULL PLANTS WITH CENTRAL LEADER	CATHEDRAL LIVE OAK	4" CAL.	
	SP	10	SABAL PALMETTO	CABBAGE PALMETTO	FIELD GROWN, 14' C.T. MIN EA, MATCHED	
	TD	15	TAXODIUM DISTICHUM	BALD CYPRESS	4" CAL.	
	UA	27	ULMUS PARVIFOLIA 'ALLEE' FULL PLANTS WITH CENTRAL LEADER	ALLEE LACEBARK ELM	4" CAL.	

SHRUBS	CODE	QTY	BOTANICAL NAME	COMMON NAME	CONT
	HC	57	HAMELIA PATENS 'COMPACTA' FULL, MATCHING PLANTS	DWARF SCARLET BUSH	5 GAL
	IV	72	ILEX VOMITORIA	YAUPON HOLLY	5 GAL
	IM	83	ILLICIUM FLORIDANUM 'MISS SCARLETT'	MISS SCARLETT FLORIDA ANISE	5 GAL
	RF	85	RHODODENDRON INDICUM 'FORMOSA'	FORMOSA AZALEA	5 GAL
	R4	308	ROSA X 'CORAL DRIFT'	CORAL DRIFT ROSE	5 GAL
	SR	87	SERENOA REPENS "SILVER FORM"	SILVER FORM SAW PALMETTO	7 GAL
	VW	87	VIBURNUM OBOVATUM 'WITHLACOOCHE'	WALTER'S VIBURNUM	5 GAL
	ZF	60	ZAMIA FURFURACEA	CARDBOARD PALM	5 GAL

SHRUB AREAS	CODE	QTY	BOTANICAL NAME	COMMON NAME	CONT	SIZE	SPACING
	MC	530	MUHLENBERGIA CAPILLARIS	GULF COAST MUHLY PINK	1 GAL	FULL IN POT	36" o.c.
	SB	256	SPARTINA BAKERI	SAND CORD GRASS	1 GAL	FULL IN POT	36" o.c.

GROUND COVERS	CODE	QTY	BOTANICAL NAME	COMMON NAME	CONT	SIZE	SPACING
	AG	1,060	ARACHIS GLABRATA 'ECOTURF'	PERENNIAL PEANUT	4" POT		18" o.c.
	TRA	719	TRACHELOSPERMUM ASIATICUM 'TEXAS LONGLEAF'	ASIATIC JASMINE 'TEXAS LONGLEAF'	1 GAL		

SOD/SEED	CODE	QTY	BOTANICAL NAME	COMMON NAME	CONT
	ZE	23,566 SF	ZOYSIA JAPONICA 'EMERALD'	EMERALD ZOYSIA	FLAT

Littlejohn
An S&ME Company
1615 Edgewater Drive, Suite 200, ORLANDO, FLORIDA 32804
T 407.975.1273 F 407.975.1278 www.leainc.com
Christopher S. Grammier, P.E. 69919
Jay R. Hood PLA LA0001277
Florida Firm Registration No. 28050

PERMIT DOCUMENTS
SPRG LADY LAKE - OUTPATIENT CLINICAL BUILDING
LADY LAKE, LAKE COUNTY, FLORIDA

NO.	DATE	DESCRIPTION	BY	CHK	APV
1	4/14/16	LADY LAKE RESUBMITTAL	CR	TM	JH
2	3/21/16	LADY LAKE SUBMITTAL	CR	TM	JH

PROJECT NUMBER
20150902

DRAWING NUMBER
L2.0

DRAWING NAME
PLANT SCHEDULE AND NOTES

G:\Projects\2015\20150902\dwg\Construction\20150902_L2-0_LAN.dwg-L2-0 Plant Schedule and Notes May 09, 2016 CGrammier

NOTES:

1. TREE STAKING IS NOT PREFERRED BUT TO BE USED AS A LAST RESORT ON WINDY SITES. INSTALL TWO OF THE THREE STAKES AND GUY WIRES ON THE UPHILL SIDE OF THE TREE.
2. DO NOT DAMAGE MAIN ROOTS OR DESTRY ROOT BALL WHEN INSTALLING TREE STAKES.
3. WATER THOROUGHLY AFTER INSTALLATION.
4. REMOVE GUY WIRES AND TIES AFTER 6 MONTHS OR AT THE DIRECTION OF THE LANDSCAPE ARCHITECT.
5. TREE SHALL STAND PLUMB.
6. SOIL MIX: 1 PART ORGANIC MATERIAL, 1 PART SAND AND 2 PARTS TOPSOIL.

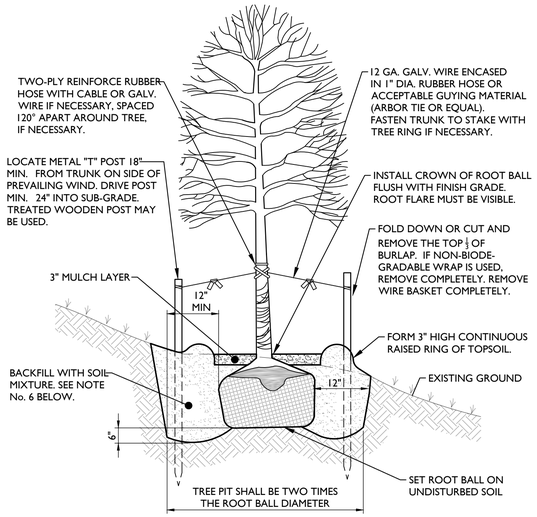

TREE PLANTING FOR SLOPED CONDITIONS

NO SCALE

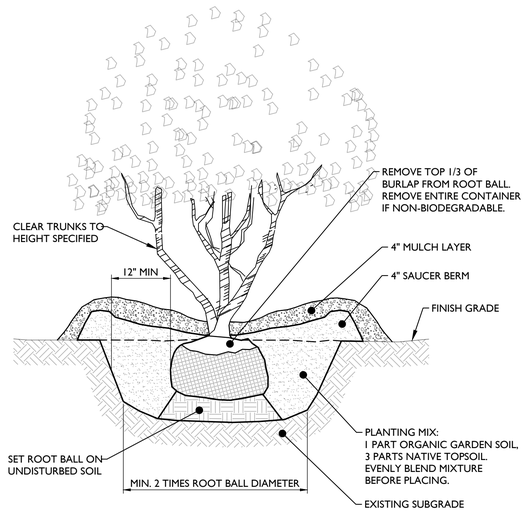

PLANTING NOTES:

1. ALL TREES ARE TO BE NURSERY GROWN, BURLAP AND BALL (B&B). MINIMUM TREE SIZE SHALL BE PER THE PLANTING SCHEDULE, MEASURED 6" ABOVE THE ROOT BALL.
2. REMOVE ALL TREATED OR PLASTIC-COATED BURLAP, STRAPPING, WIRE OR NYLON TWINE FROM THE ROOT BALL. COMPLETELY REMOVE WIRE BASKET IF ONE EXISTS.
3. INSTALL THE TOP OF THE PLANT BALL FLUSH WITH OR 1" ABOVE THE ADJACENT GRADE.
4. SET THE TREE IN THE VERTICAL POSITION BEFORE STAKING IT IN PLACE.
5. SOAK THE ROOT BALL AND PIT IMMEDIATELY AFTER INSTALLATION. PLACE 4" TO 6" OF SEASONED MULCH OR PINE NEEDLES AROUND THE BASE OF THE TREE, 3' MINIMUM DIAMETER.

MULTI-TRUNK PLANTING

NO SCALE

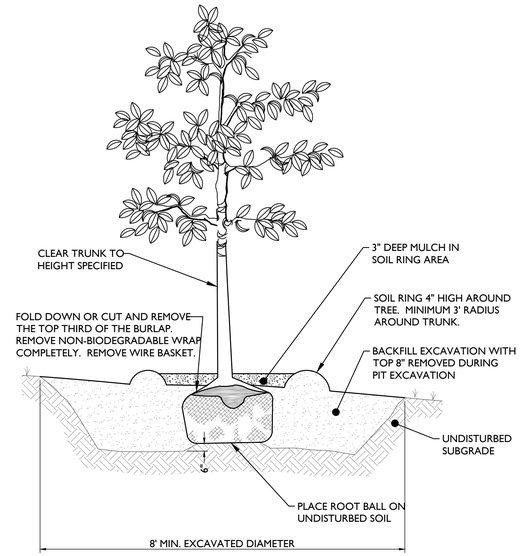

NOTES:

1. SCARIFY THE EDGES OF THE EXCAVATED PIT AND TAKE ALL NECESSARY MEASURES TO ASSURE ADEQUATE DRAINAGE.
2. TO ENSURE SUCCESSFUL ESTABLISHMENT OF ALL TREES PLANTED OUTSIDE THE LIMITS OF IRRIGATION EVERY SUCH TREE SHALL BE FITTED WITH A SLOW-RELEASE WATERING SYSTEM SUCH AS "TREEGATOR BAGS" OR AN APPROVED EQUAL.
3. AS PART OF THE MAINTENANCE PLAN IT IS RECOMMENDED THAT ALL TREES OUTSIDE THE LIMITS OF IRRIGATION BE WATERED A MAXIMUM OF TWO TIMES PER WEEK DURING DRY SEASONS AND ONE TIME PER WEEK DURING WET SEASONS FOR A MINIMUM OF TWO YEARS FROM THE DATE OF INSTALLATION.
4. IT IS THE OWNER'S RESPONSIBILITY TO COORDINATE AND SCHEDULE TREE MAINTENANCE.

CANOPY TREE PLANTING

NO SCALE

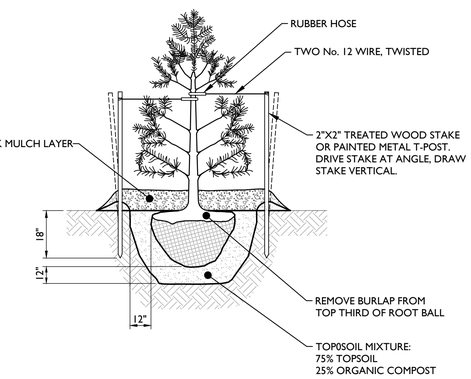

CONIFER PLANTING/STAKING

NO SCALE

NOTES:

1. ANY BROKEN OR CRUMBLING ROOT BALL WILL BE REJECTED.
2. PRUNE ALL DAMAGED OR DEAD WOOD IMMEDIATELY PRIOR TO PLANTING.
3. INSTALL SHRUB FLUSH WITH ADJACENT GRADE.
4. SOAK EACH PLANT BALL AND PIT IMMEDIATELY AFTER PLANTING.
5. SCARIFY ROOT BALL IF ROOT-BOUND IN CONTAINER.
6. HOLD MULCH 1" BELOW EDGE OF WALK OR CURB.
7. PROTECT ALL SHRUBS WITH CAGES OF WELDED WIRE MESH 5' IN DIAMETER, 5' HIGH. SECURE WITH 6' STEEL T-POSTS DRIVEN MIN. 1' INTO THE GROUND. WIRE THE POSTS TO THE CAGE.

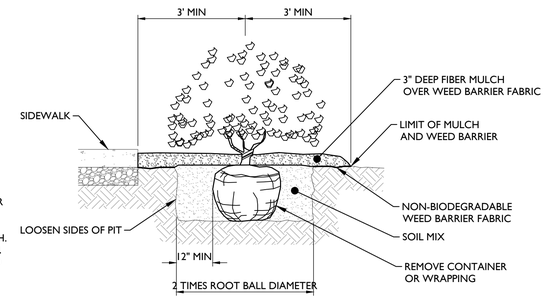

SHRUB PLACEMENT

NO SCALE

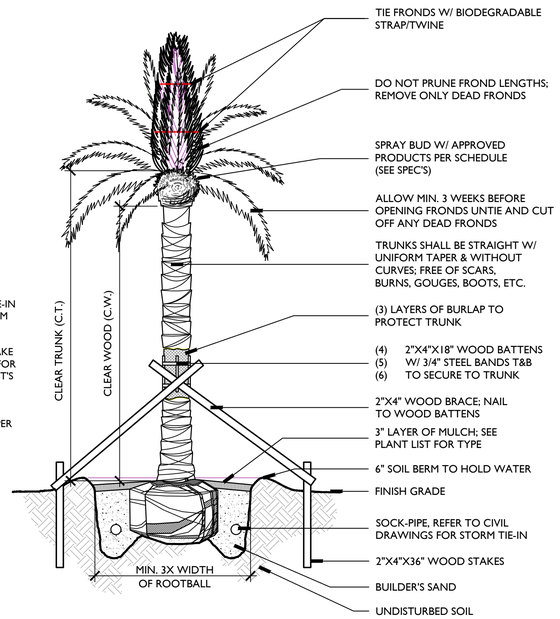

NOTES:

1. CONTRACTOR SHALL PROVIDE SOCK-PIPE TIE-IN FOR ALL SPECIMEN PALM LOCATIONS
2. CONTRACTOR TO STAKE LOCATION OF PALMS FOR LANDSCAPE ARCHITECT'S APPROVAL PRIOR TO INSTALLATION
3. STAKE PALMS (8'+ C.T.PER STAKING DETAIL)

SPECIMEN PALM PLANTING

NO SCALE

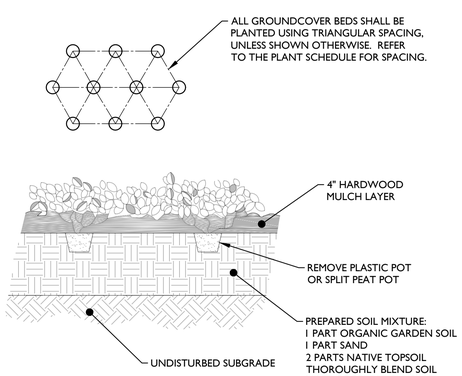

GROUNDCOVER PLANTING

NO SCALE

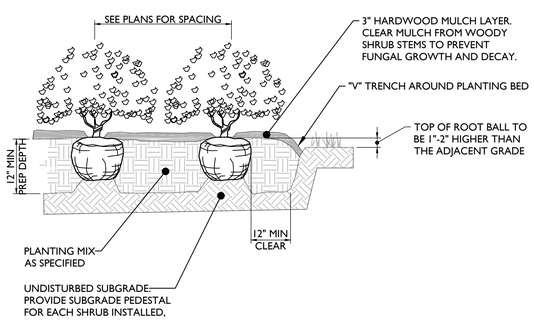

NOTES:

1. TAMP PLANTING MIX AS PIT IS FILLED AROUND EACH PLANT BALL.
2. SOAK EACH PLANT BALL AND PIT IMMEDIATELY AFTER PLANTING.
3. SCARIFY THE ROOT BALL IF ROOT-BOUND IN ITS CONTAINER.
4. WHERE SHRUBS APPEAR IN BED AREAS, 3" OF MULCH SHALL BE SPREAD OVER THE ENTIRE AREA WITHIN THE BED EDGE AS INDICATED ON THE PLANS.
5. DO NOT PRUNE BEFORE ACCEPTANCE.
6. REMOVE BURLAP FROM TOP THIRD OF ROOT BALL OR CAREFULLY REMOVE THE PLASTIC CONTAINER, IF ONE IS USED.
7. BACKFILL WITH SOIL MIXTURE AS FOLLOWS: 1 PART COMPOSTED GARDEN SOIL - 1 PART SAND - 2 PARTS NATIVE TOPSOIL.

SHRUB PLANTING

NO SCALE

Littlejohn
An S&ME Company
1615 Edgewater Drive, Suite 200, ORLANDO, FLORIDA 32804
T 407.975.1273 F 407.975.1278 www.leainc.com
Christopher S. Grammier, P.E. 69919
Jay R. Hood PLA LA0001277
Florida Firm Registration No. 28050

PERMIT DOCUMENTS

SPRG LADY LAKE - OUTPATIENT CLINICAL BUILDING

LADY LAKE, LAKE COUNTY, FLORIDA

NO.	DATE	DESCRIPTION	BY	CHK	APV
1	4/14/16	LADY LAKE RESUBMITTAL	CR	TM	JH
2	3/21/16	LADY LAKE SUBMITTAL	CR	TM	JH

PROJECT NUMBER
20150902

DRAWING NUMBER
L2.1

DRAWING NAME
PLANTING DETAILS

G:\Projects\2015\20150902\dwg\Construction\20150902_L2-0_LAN.dwg-L2-1 Planting Details May 09, 2016 CGrammier

INSIGHT IRRIGATION LLC
(353) 434-5015
www.insightirrigation.com

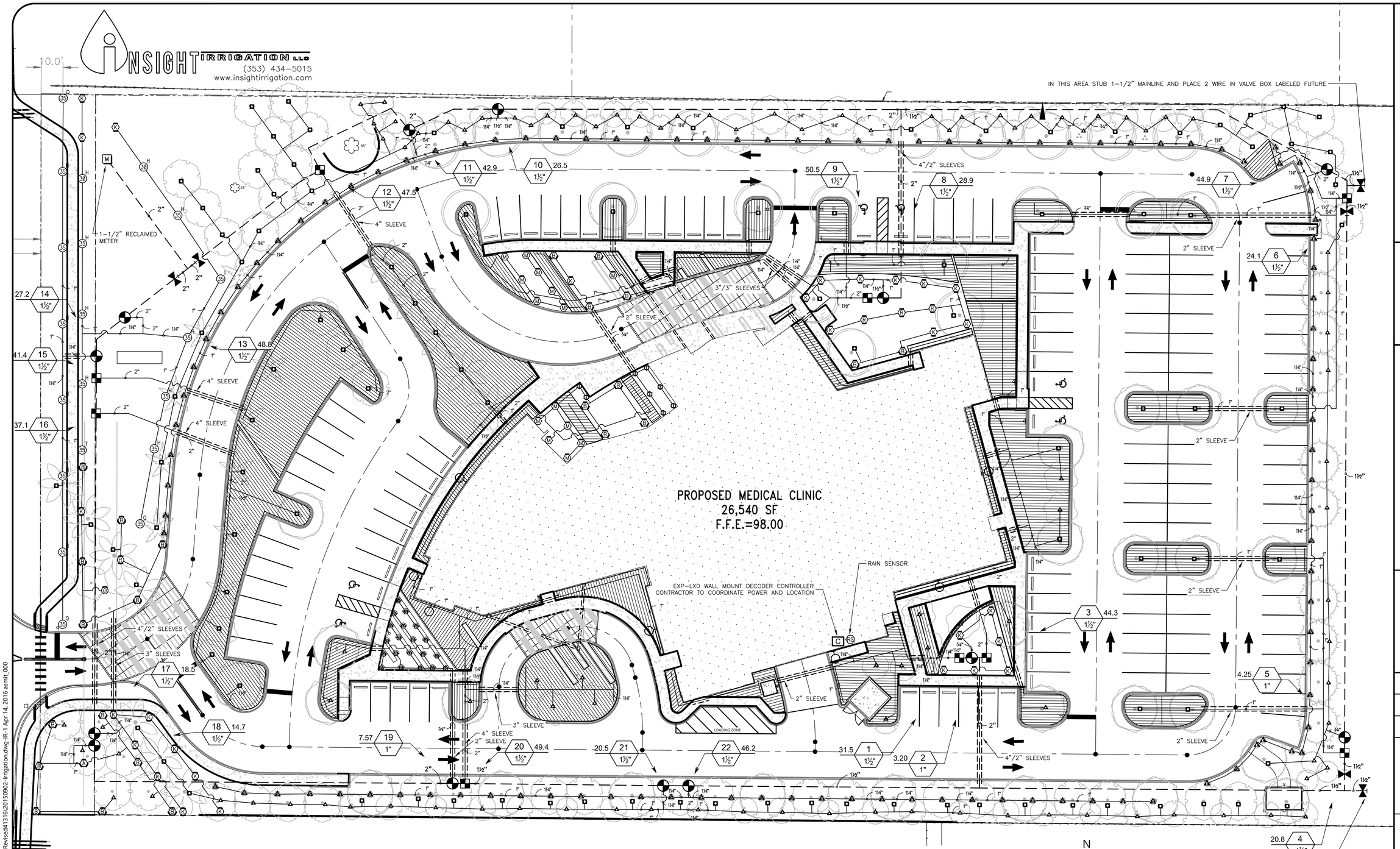

811
KNOW WHAT'S BELOW
ALWAYS CALL 811 BEFORE YOU DIG
It's fast, It's free, it's the law.
Call 811 two business days before digging

MAINLINE LOCATION, WHERE SHOWN, IS FOR GRAPHIC CLARITY PURPOSES ONLY. INSTALL AT THE BACK OF CURB, FRONT OF WALK, BACK OF WALK, OR ADJACENT TO OTHER HARDSCAPES TO FACILITATE FUTURE LOCATION AND TO PROTECT FROM DAMAGE. ENSURE MAINLINE IS INSTALLED ACCORDING FDEP GUIDELINES AND TO IRRIGATION SPECIFICATIONS AND DETAILS.

Littlejohn
An S&ME Company
1615 Edgewater Drive, Suite 200, ORLANDO, FLORIDA 32804
T 407.975.1273 F 407.975.1278 www.leainc.com
Christopher S. Grammier, P.E. 69919
Bruce C. Hall PLA LA0001367
Florida Firm Registration No. 28050

PERMIT DOCUMENTS

SPECIALTY ORTHOPEDIC CLINIC

LADY LAKE, LAKE COUNTY, FLORIDA

NO.	DATE	DESCRIPTION	BY	CHK	APV

PROJECT NUMBER
20150902

DRAWING NUMBER
IR-1

DRAWING NAME
IRRIGATION PLAN

C:\Users\asmit_000\Desktop\Lady Lake\Revised41316\20150902-Irrigation.dwg-IR-1 Apr 14, 2016 asmit_000

IRRIGATION_SCHEDULE

SYMBOL	MANUFACTURER/MODEL	QTY	ARC	PSI	GPM	RADIUS	
	Hunter PROS-06-PRS30-CV-R 5' strip spray	12	EST	30	0.65	5'	U
	Hunter PROS-06-PRS30-CV-R 5' strip spray	93	SST	30	1.30	5'x30'	U
	Hunter PROS-06-PRS30-CV-R 8' radius	11	180	30	0.47	8'	U
	Hunter PROS-06-PRS30-CV-R 8' radius	6	90	30	0.24	8'	U
	Hunter PROS-06-PRS30-CV-R 8' radius	3	120	30	0.32	8'	U
M	Hunter MP1000 PROS-06-PRS40-CV-R	14	90-210	40		14'	U
K	Hunter MP2000 PROS-06-PRS40-CV-R	19	90-210	40		19'	U
R	Hunter MP2000 PROS-06-PRS40-CV-R	3	360	40	1.47	19'	U
A	Hunter MP3000 PROS-06-PRS40-CV-R	1	360	40	3.64	30'	U
B	Hunter MP3000 PROS-06-PRS40-CV-R	17	90-210	40		30'	U
	Hunter MP800SR PROS-06-PRS40-CV-R	8	Adj	40		10'	U
	Hunter MP1000 PROS-12-PRS40-CV-R	1	360	40	0.75	14'	S
K	Hunter MP2000 PROS-12-PRS40-CV-R	9	90-210	40		19'	S
R	Hunter MP2000 PROS-12-PRS40-CV-R	1	360	40	1.47	19'	S
B	Hunter MP3000 PROS-12-PRS40-CV-R	6	90-210	40		30'	S
	Rain Bird 1800-1400 Flood	101	360	30	0.25	1'	Q
	Rain Bird 1800-1400 Flood	103	360	30	0.50	1'	Q
SYMBOL	MANUFACTURER/MODEL/DESCRIPTION	QTY		PSI	GPM	RADIUS	DETAIL
38 ARC	Hunter I-20-06-MPR-SS-R Turf Rotor, 6.0" Pop-Up, Adjustable and Full Circle. Stainless Steel Riser. Drain Check Valve. MPR Nozzle. With Reclaimed Water Purple ID Cover.	2		45		30'	V
35 ARC	Hunter I-20-06-MPR-SS-R Turf Rotor, 6.0" Pop-Up, Adjustable and Full Circle. Stainless Steel Riser. Drain Check Valve. MPR Nozzle. With Reclaimed Water Purple ID Cover.	18		45		35'	V
SYMBOL	MANUFACTURER/MODEL/DESCRIPTION	QTY					DETAIL
	Rain Bird XCZ-150-PRB-COM High Flow Control Zone Kit, for Large Commercial Drip Zones. 1-1/2" PESB Valve with two 1" Pressure Regulating (40psi) Quick-Check Basket Filters. Flow range: 15-40gpm.	9					B
	Area to Receive Dripline Netafim TLDL-9-12 (12) Techline Pressure Compensating Landscape Dripline. 0.9GPH emitters at 12.0" O.C. Dripline laterals spaced at 12.0" apart, with emitters offset for triangular pattern. Surface and Sub Surface Installations. UV Resistant.	20,591 s.f.					M
SYMBOL	MANUFACTURER/MODEL/DESCRIPTION	QTY					DETAIL
	Rain Bird PESBR 1", 1-1/2", and 2" Durable Chlorine-Resistant Valves for Reclaimed Water Applications. With Scrubber Mechanism Technology, and Purple Flow Control Handle.	13					B
	Nibco T-113 Class 125 bronze gate shut off valve with wheel handle, same size as mainline pipe diameter at valve location. Size Range - 1/4" - 3"	6					
C	Rain Bird ESP-LXD Two-Wire Decoder Commercial Controller. 50 Stations. UV-Resistant, Outdoor-Rated, Plastic Locking Wall-Mountable Case. Available in the US market, International, European, or Australian Markets.	1					C
RS	Rain Bird RSD-BEx Rain Sensor, with metal latching bracket, extension wire.	1					
M	Water Meter 1-1/2" 1-1/2" Reclaimed Water Meter	1					
	Irrigation Lateral Line: Blu-Lock and PVC Class 200 Blu-Lock pipe, as manufactured by Hydro Rain, 1/2" to 1", then PVC Class 200 for 1-1/4" and larger. Only lateral transition pipe sizes 1" and above are indicated on the plan, with all others being 3/4" in size.	9,184 l.f.					L
	Irrigation Mainline: PVC Schedule 40 PVC Schedule 40 irrigation pipe.	1,943 l.f.					L
	Pipe Sleeve: PVC Schedule 40	758.8 l.f.					O

Valve Callout
Valve Number
Valve Flow
Valve Size

VALVE SCHEDULE

NUMBER	MODEL	SIZE	TYPE	PSI	PSI @ POC	GPM	PRECIP
1	Rain Bird XCZ-150-PRB-COM	1-1/2"	Area for Dripline	46.67		31.51	1.52 in/h
2	Rain Bird PESBR	1"	Turf Rotary	42.85	43.02	3.20	0.34 in/h
3	Rain Bird XCZ-150-PRB-COM	1-1/2"	Area for Dripline	53.25	66.60	44.32	1.52 in/h
4	Rain Bird XCZ-150-PRB-COM	1-1/2"	Bubbler	44.73	47.92	20.81	1.52 in/h
5	Rain Bird PESBR	1"	Bubbler	33.69	33.91	4.25	8.68 in/h
6	Rain Bird XCZ-150-PRB-COM	1-1/2"	Bubbler	46.25	50.20	24.14	1.52 in/h
7	Rain Bird PESBR	1-1/2"	Turf Spray	38.69	51.14	44.85	1.55 in/h
8	Rain Bird PESBR	1-1/2"	Turf Rotary	47.98	52.23	28.93	0.53 in/h
9	Rain Bird XCZ-150-PRB-COM	1-1/2"	Area for Dripline	54.40		50.47	1.52 in/h
10	Rain Bird PESBR	1-1/2"	Bubbler	39.57		26.50	11.28 in/h
11	Rain Bird PESBR	1-1/2"	Turf Spray	37.34	43.62	42.90	1.68 in/h
12	Rain Bird XCZ-150-PRB-COM	1-1/2"	Bubbler	54.80	61.50	47.49	1.52 in/h
13	Rain Bird PESBR	1-1/2"	Turf Rotor	50.78	56.95	48.84	0.65 in/h
14	Rain Bird PESBR	1-1/2"	Turf Rotor	51.39	53.46	27.20	0.68 in/h
15	Rain Bird XCZ-150-PRB-COM	1-1/2"	Area for Dripline	52.64		41.38	1.52 in/h
16	Rain Bird XCZ-150-PRB-COM	1-1/2"	Area for Dripline	51.36		37.08	1.52 in/h
17	Rain Bird PESBR	1-1/2"	Shrub Rotary	45.77	47.04	18.55	0.44 in/h
18	Rain Bird PESBR	1-1/2"	Turf Rotary	44.63	45.44	14.73	0.53 in/h
19	Rain Bird PESBR	1"	Turf Spray	35.99		7.57	1.24 in/h
20	Rain Bird XCZ-150-PRB-COM	1-1/2"	Bubbler	54.95		49.39	1.52 in/h
21	Rain Bird PESBR	1-1/2"	Bubbler	40.04	42.49	20.50	11.22 in/h
22	Rain Bird PESBR	1-1/2"	Turf Spray	38.15	49.71	46.15	1.64 in/h

CRITICAL ANALYSIS

Generated:	2016-04-13 23:55
P.O.C. NUMBER: 01	
Water Source Information:	1-1/2" Reclaimed Water Meter
FLOW AVAILABLE	
Water Meter Size:	1-1/2"
Flow Available:	54.38 gpm
PRESSURE AVAILABLE	
Static Pressure at POC:	75.00 psi
Elevation Change:	5.00 ft
Service Line Size:	1 1/2"
Length of Service Line:	20.00 ft
Pressure Available:	72.00 psi
DESIGN ANALYSIS	
Maximum Station Flow:	50.04 gpm
Flow Available at POC:	54.38 gpm
Residual Flow Available:	4.34 gpm
Critical Station:	9
Design Pressure:	30.00 psi
Elevation Loss:	0.00 psi
Friction Loss:	4.90 psi
Fittings Loss:	0.49 psi
Loss through Valve:	20.70 psi
Pressure Req. at Critical Station:	56.09 psi
Loss for Fittings:	0.80 psi
Loss for Main Line:	7.99 psi
Loss for POC to Valve Elevation:	0.00 psi
Loss for Backflow:	0.00 psi
Loss for Water Meter:	4.91 psi
Critical Station Pressure at POC:	69.79 psi
Pressure Available:	72.00 psi
Residual Pressure Available:	2.21 psi

INSIGHT IRRIGATION LLC
(353) 434-5015
www.insightirrigation.com

Littlejohn
An S&ME Company
1615 Edgewater Drive, Suite 200, ORLANDO, FLORIDA 32804
T 407.975.1273 F 407.975.1278 www.leainc.com
Christopher S. Grammier, P.E. 69919
Bruce C. Hall PLA LA0001367
Florida Firm Registration No. 28050

PERMIT DOCUMENTS
SPECIALTY ORTHOPEDIC CLINIC
LADY LAKE, LAKE COUNTY, FLORIDA

NO.	DATE	DESCRIPTION	BY	CHK	APV

PROJECT NUMBER
20150902

DRAWING NUMBER
IR-2

DRAWING NAME
IRRIGATION DETAILS

C:\Users\asmit_000\Desktop\Lady Lake\Revised41316\20150902-irrigation.dwg-IR-2 Apr 14, 2016 asmit_000

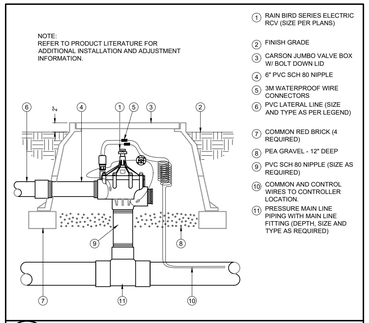

B — RAIN BIRD PEB

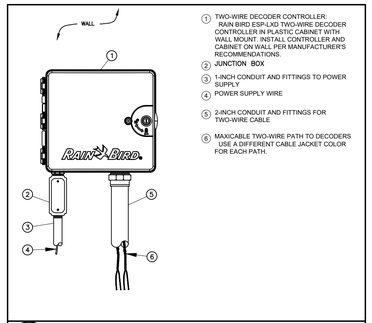

C — ESP-LXD

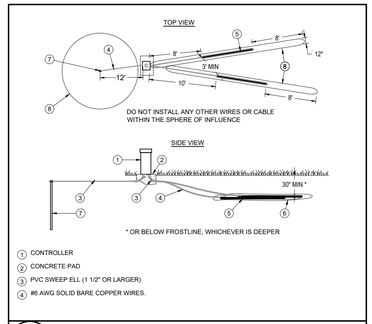

C — GROUNDING DETAIL

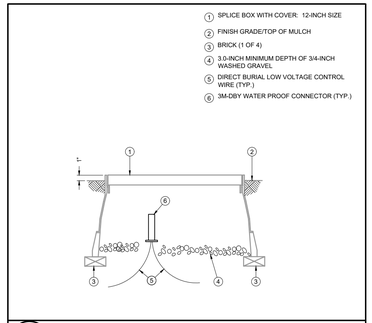

C — WIRE SPLICE

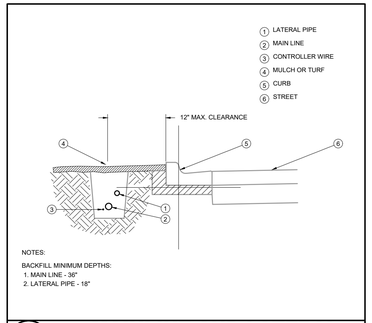

L — MAINLINE AND LATERAL PIPING DETAIL

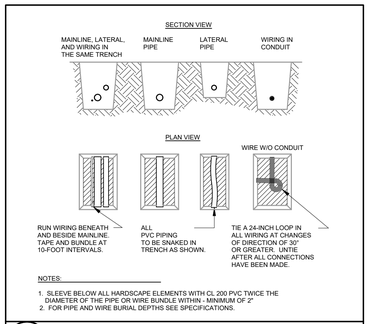

L — PIPE AND WIRE TRENCHING

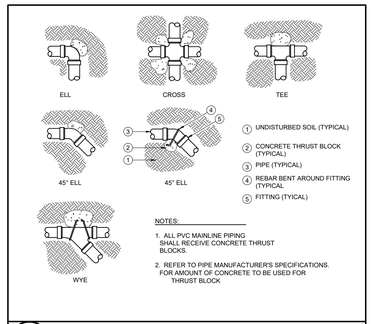

L — THRUST BLOCK

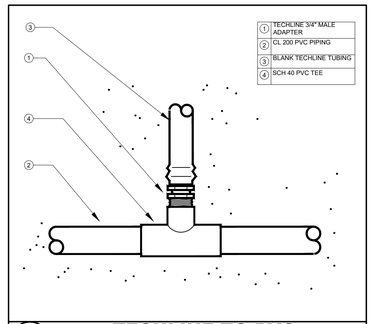

M — TECHLINE TO PVC CONNECTION

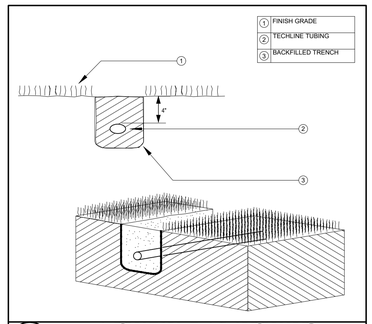

M — TECHLINE TRENCHING DETAIL

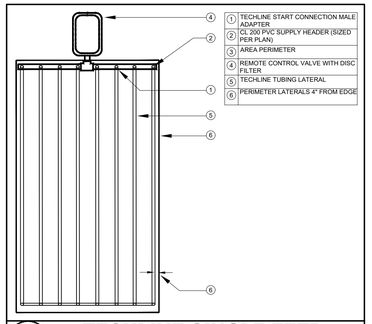

N — TECHLINE SINGLE FEED LAYOUT

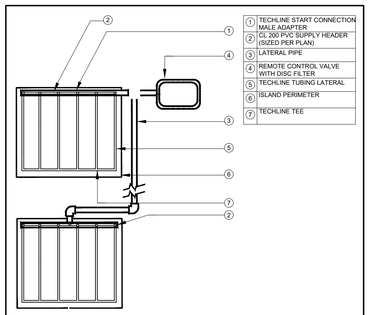

N — TECHLINE MULTIPLE ISLAND LAYOUT

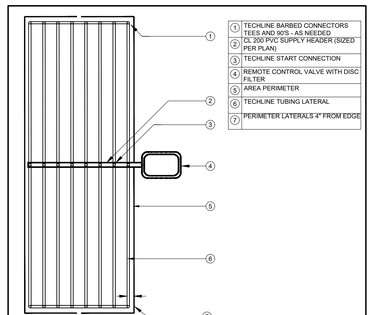

N — TECHLINE DUAL FEED LAYOUT

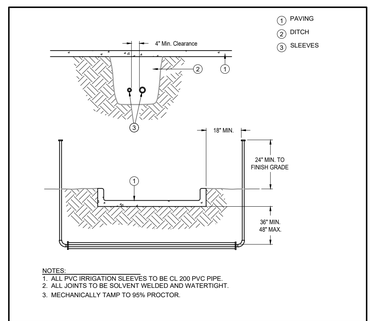

O — SLEEVING

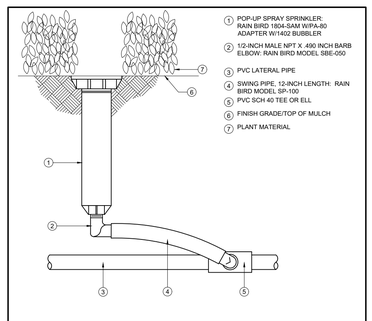

Q — RAIN BIRD 1804-SAM POP-UP WITH 1402 BUBBLER

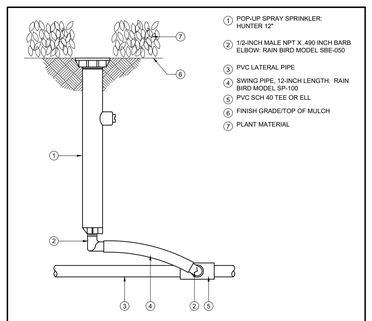

S — HUNTER 12" POP UP

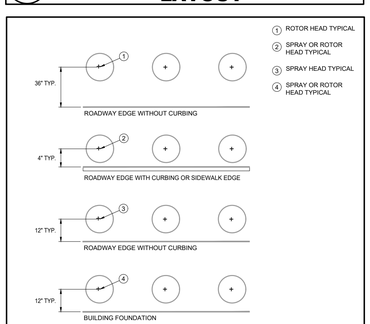

S — POP-UP HEAD TO HARDSCAPE LOCATION DETAIL-A

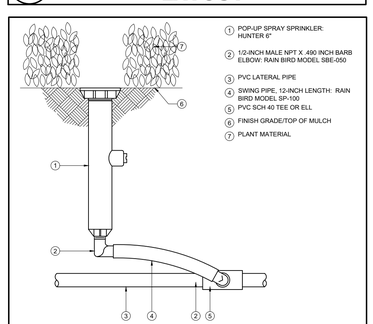

U — HUNTER 6"

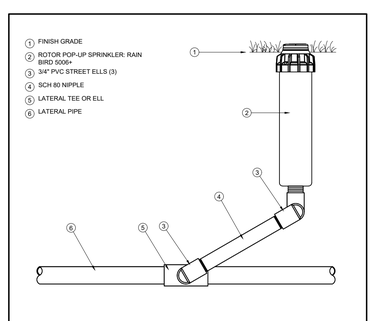

V — RAIN BIRD 5000 GEARED ROTOR

Littlejohn An S&ME Company
1615 Edgewater Drive, Suite 200, ORLANDO, FLORIDA 32804
T 407.975.1273 F 407.975.1278 www.lesinc.com
Christopher S. Grammier, P.E. 69919
Bruce C. Hall PLA LA0001367
Florida Firm Registration No. 28050

PERMIT DOCUMENTS

SPECIALTY ORTHOPEDIC CLINIC

LADY LAKE, LAKE COUNTY, FLORIDA

NO.	DATE	DESCRIPTION	BY	CHK	APV

INSIGHT IRRIGATION LLC
(353) 434-5015
www.insightirrigation.com

PROJECT NUMBER 20150902

DRAWING NUMBER IR-3

DRAWING NAME IRRIGATION DETAILS

C:\Users\asmit_000\Desktop\Lady Lake\Revised41316\20150902-Irrigation.dwg-IR-3 Apr 14, 2016 asmit_000

IRRIGATION NOTES & SPECIFICATIONS

DESIGN BASED ON LANDSCAPE PLANS BY LITTLEJOHN. CONTRACTOR SHALL REFER TO THESE PLANS TO COORDINATE CONTROLLER, PIPING, MASTER VALVES, WIRING, ETC. INSTALLATION WITH THE GENERAL CONTRACTOR AND ANY AND ALL OTHER AFFECTED TRADES.

The system has been designed to conform with the requirements of all applicable codes, laws, ordinances, rules, regulations and conventions. Should any conflict exist, the requirements of the codes shall prevail. It is the responsibility of the owner/installation contractor to ensure the entire system is installed as designed. Irrigation contractor responsible for obtaining all required permits according to federal, state and local laws.

The scope of work is shown on the plans, notes and details. The Irrigation Contractor shall be certified as a CERTIFIED IRRIGATION CONTRACTOR (CIC) by the Irrigation Association AND as a Rain Bird IQ Technician. The certification shall be current and in good standing.

THE WORK

The work specified in this section consists of furnishing all components necessary for the installation, testing, and delivery of a complete, fully functional automatic landscape irrigation distribution and control system that complies with the irrigation plans, specifications, notes, and details. This work shall include, but not be limited to, the providing of all required material if applicable (pipes, valves, fittings, controllers, wire, primer, glue, etc.), layout, protection to the public, excavation, assembly, installation, back filling, compacting, repair of road surfaces, controller and low voltage feeds to valves, cleanup, maintenance, guarantee and as-built plans.

Zones are prioritized first by public safety and then by hydraulic concerns. This sequencing will be a mandatory punch list item.

These plans have been designed to satisfy/exceed the Florida Irrigation Society Standards and Specifications for Turf and Landscape Irrigation Systems, fourth edition. All products should be installed per manufacturer's recommendation. Contractor shall verify all underground utilities 72 hours prior to commencement of work.

It is the responsibility of the irrigation contractor to familiarize themselves with all grade differences, location of walls, retaining walls, structures and utilities. Do not willfully install the distribution system as shown on the drawings when it is obvious in the field that unknown obstruction, grade differences or differences in the area dimensions exist that might not have been considered in the engineering. Such obstructions, or differences, should be brought to the attention of the owner's authorized representative. In the event this notification is not performed, the irrigation contractor shall assume full responsibility for any revisions necessary.

Irrigation contractor shall repair or replace all items damaged by their work. Irrigation contractor shall coordinate their work with other contractors for the location and installation of pipe sleeves and laterals through walls, under roadways and paving, etc.

The contractor shall take immediate steps to repair, replace, or restore all services to any utilities which are disrupted due to their operations. All costs involved in disruption of service and repairs due to negligence on the part of the contractor shall be their responsibility.

POINT OF CONNECTION (P.O.C.)

There is one 1-1/2" proposed reclaimed meter.

The POC shall be capable of a minimum of 50 gpm at 75psi.

Contractor to verify these minimum conditions can be met prior to ordering of materials and the beginning of installation. If the conditions can not be met, the contractor must notify the designer prior to proceeding with the work. If the contractor does not do so, the contractor proceeds at their own risk and becomes responsible for any future work required to make the system perform as required.

THE PIPE

Pipe locations shown on the plan are schematic and shall be adjusted in the field. When laying out mainlines place a maximum of 18" away from either the back of curb, front of walk, back of walk, or other hardscape to allow for ease in locating and protection from physical damage. Install all lateral pipe near edges of pavement or against buildings whenever possible to allow space for plant root balls. Always install piping inside project property's boundary.

Pipe sizes shall conform to those shown on the drawings. No substitutions of smaller pipe sizes shall be permitted, but substitutions of larger sizes may be approved. All damaged and rejected pipe shall be removed from the site at the time of said rejection.

SCHEDULE 40 PVC PANTONE PURPLE MAINLINE WITH SOLVENT WELD SCH 40 FITTINGS(SIZED PER PLANS)

ELECTRICAL POWER SUPPLY

Electrical supply for controllers, sensors, relays, to be provided by irrigation contractor. Contractor to coordinate with local utilities for the installation of, and connection to, site available power supplies for required electrical components as set forth in the irrigation plans.

All electrical work is to comply with the National Electrical Code and any, and all, other applicable electrical codes, laws and regulations. A licensed electrician shall perform all electrical hook-ups. Power for each controller/CCU shall be a dedicated 120 volt, 20 amp circuit unless otherwise specified in the plans. Power for each pump to be according to pump specifications indicated in these plans.

WIRING

Irrigation control wire shall be DIRECT BURIAL MAXI WIRE(see specification)

All wire shall be double-jacketed, two (2) conductor cable specifically designed by Paige Electric for use with RAIN BIRD control systems. The cable shall be suitable for direct burial, or for installation in ducts or conduits.
The conductors shall be #14 AWG tin-coated, soft drawn, annealed, solid copper conforming to ASTM 33 with 4/64" thick PVC (polyvinyl chloride) insulation, conforming to UL Standard #493 for thermoplastic insulated style UF (Underground Feeder), rated at 60 degrees C.
The two insulated conductors shall be laid parallel and encased in a single outer jacket of 3/64" thick, high density, sunlight resistant polyethylene conforming to ICEA S-61-402 and NEMA WC5, having a minimum wall thickness of .045". The outer jacket shall be pressure extruded so as to completely fill the interstices between the two insulated wires, or may have tube jacketing or form an envelope over the two insulated UF conductors lying in parallel at the discretion of the manufacturer.
The two conductors shall be color coded with one conductor black and the other red.
Both conductors shall be the SAME SIZE.
All splices and connections in this wiring shall be made using the waterproof splice connectors.3M DBY/R-6 wire connector kits will be used. Any other type of wire connector will NOT be accepted. Care shall be taken with each wire connection to assure a tight, waterproof connection. IT IS ESSENTIAL THAT ALL CONNECTIONS BE ABSOLUTELY WATERTIGHT WITH NO LEAKAGE TO GROUND NOR SHORTING BETWEEN CONDUCTORS.

LAYOUT

Lay out irrigation system mainlines and lateral lines. Make the necessary adjustments as required to take into account all site obstructions and limitations prior to excavating trenches.

Locate valves prior to excavation. Ensure that their location provides for easy access and that there is no interference with physical structures, plants, trees, poles, etc. Valve boxes must be placed a minimum of 12" and a maximum of 15" from the edge of pavement, curbs, etc. and the top of the box must be 3" above finish grade.

VALVES

Sequence all valves so that the farthest valve from the P.O.C. operates first and the closest to the P.O.C. operates last. The closest valve to the P.O.C. should be the last valve in the programmed sequence.

Adjust the flow control on each RCV to ensure shut off in 10 seconds after deactivation by the irrigation controller.

Using an electric branding iron, brand the valve I.D. letter/number on the lid of each valve box. This brand must be 2"-3" tall and easily legible.

TRENCHING

Excavate straight and vertical trenches with smooth, flat or sloping bottoms. Trench width and depth should be sufficient to allow for the proper vertical and horizontal separation between piping as shown in the pipe installation detail on the detail sheet.

Protect existing landscaped areas. Remove and replant any damaged plant material upon job completion. The replacement material shall be of the same genus and species, and of the same size as the material it is replacing. The final determination as to what needs to be replaced and the acceptability of the replacement material shall be solely up to the owner or owner's representative.

BACK FILL

The Back fill 6" below, 6" above, and around all piping shall be of clean sand and anything beyond that in the trench can be of native material but nothing larger than 2" in diameter.

Main line pipe depth measured to the top of pipe shall be:
24" minimum for all Main Line with a 36" minimum at vehicular crossings.

Lateral line depths measured to top of pipe shall be:
18" minimum for 3/4"-4" HDPE with a 36" minimum at vehicular crossings;

Contractor shall backfill all piping, both mainline and laterals, prior to performing any pressure tests. The pipe shall be backfilled with the exception of 2' on each side of every joint (bell fittings, 90's, tees, 45's, etc.). These joints shall not be backfilled until all piping has satisfactorily passed its appropriate pressure test as outlined below.

FLUSHING

Prior to the placement of valves, flush all mainlines for a minimum of 10 minutes or until lines are completely clean of debris, whichever is longer.

Prior to the placement of heads, flush all lateral lines for a minimum of 10 minutes or until lines are completely clean of debris, whichever is longer.

Use screens in heads and adjust heads for proper coverage avoiding excess water on walls, walks and paving.

TESTING

Mainline: Remove all remote control valves and cap using a threaded cap on SCH 80 nipple. Fill mainline with water and pressurize the system to 125 PSI. Monitor the system pressure at two gauge locations; the gauge locations must be at opposite ends of the mainline. With the same respective pressures, monitor the gauges for two hours. There can be no loss in pressure at either gauge for solvent-welded pipe. For HDPE pipe, see HDPE notes. For gasketed pipe, testing requires measurement of the water pumped into the mainline system, using a hydrostatic pump, to maintain 125 PSI - this water volume shall be no more than the result of the following formula:

$$L=(ND\sqrt{P})/7400$$

where L=Allowable leakage in gallons per hour
N=Number of joints in pipe tested
D=Nominal diameter of pipe (in inches)
P=Average Test Pressure (in PSI)

If these parameters are exceeded, locate the problem; repair it; wait 24 hours and retry the test. This procedure must be followed until the mainline passes the test.

Lateral Lines: The lateral lines must be fully filled to operational pressure and visually checked for leaks. Any leaks detected must be repaired.

SUBMITTALS

Pre-Construction: The contractor must submit for written approval, prior to installation, five (5) copies of the manufacturer's cut sheets/specifications for all components to be used in the irrigation system.

After project completion:
As a condition of final acceptance, the irrigation contractor shall provide the owner with:
1. Irrigations As-builts - shall be provided utilizing a sub-foot Global Positioning System (GPS) to accurately locate all mainlines, sleeves, remote control valves, gate valves, independent wire runs, wire splice boxes, controllers, high voltage supply sources/conduit path, control mechanisms, sensors, wells and water source connections in Florida East State Plane, NAD 83, and CORS 96 format. The data collected shall be in POINT format and include an ID for each data point with Manufacturer, Type, Size, and Depth. All mainline and independent runs of wire shall be located every 30' for straight runs and at every change of direction. Sleeves will be located at end points and every 20' of length. All underground items shall include depth in inch format. These POINTS once collected shall be imported into an AutoCAD DWG geo-referenced base file to be labeled accordingly. The completed AS-Built shall be a Geo-Referenced DWF file and delivered to the owner on a compact disk (CD).

2. Controller charts - Upon completion of "as-built" prepare controller charts; one per controller. Indicate on each chart the area controlled by a remote control valve (using a different color for each zone). This chart shall be reduced to a size that will fit inside of the controller door. The reduction shall be hermetically sealed inside two 2ml pieces of clear plastic.

3. Grounding Certification - Provide ground certification results for each controller and pump panel grounding grid installed. This must be on a licensed electrician letter head indicating location tested (using IR plan symbols), date, time, test method, and testing results.

INSPECTIONS AND COORDINATION MEETINGS REQUIRED - Contractor is required to schedule, perform, and attend the following, and demonstrate to the owner and/or owners representative to their satisfaction, as follows:

1. Pre-construction meeting - Designer and contractor to review entire install process and schedule with owner/general contractor.
2. Mainline installation inspection(s) - all mainline must be inspected for proper pipe, fittings, depth of coverage, backfill. and installation method
3. Mainline pressure test - All mainline shall be pressure tested according to this designs requirements
4. Flow Meter calibration - All flow meters must be calibrated, provide certified calibration report for all flow meters.
5. USDA Soil Quality Tests for infiltration/texture
6. Coverage and operational test
7. Final inspection
8. Punch list inspection

FINAL ACCEPTANCE

Final acceptance of the irrigation system will be given after the following documents and conditions have been completed and approved. Final payment will not be released until these conditions are satisfied.

1. All above inspections are completed, documented, and approved by owner.
2. Completion and acceptance of `as-built' drawings.
3. Acceptance of required controller charts and placement inside of controllers.
4. All other submittals have be made to the satisfaction of the owner.

GUARANTEE: The irrigation system shall be guaranteed for a minimum of one calendar year from the time of final acceptance.

MINIMUM RECOMMENDED
IRRIGATION MAINTENANCE PROCEDURES

1. Every irrigation zone should be checked monthly and written reports generated describing the date(s) each zone was inspected, problems identified, date problems repaired, and a list of materials used in the repair. At minimum, these inspections should include the following tasks:

A. Turn on each zone from the controller to verify automatic operation.
B. Check schedules to ensure they are appropriate for the season, plant and soil type, and irrigation method. Consult an I.A. certified auditor for methods used in determining proper irrigation scheduling requirements.
C. Check remote control valve to ensure proper operation.
D. Check setting on pressure regulator to verify proper setting, if present.
E. Check flow control and adjust as needed; ensure valve closure within 10-15 seconds after deactivation by controller.
F. Check for leaks - mainline, lateral lines, valves, heads, etc.

2. Check controller/C.C.U. grounds for resistance (10 ohms or less) once per year. Submit written reports.

3. Inspect all valve boxes to ensure they are in good condition, lids are in place and locked.

4. Conduct additional inspections, maintenance tasks, etc. that are particular for your site.

INSIGHT IRRIGATION LLC
(353) 434-5015
www.insightirrigation.com

Littlejohn
An S&ME Company
1615 Edgewater Drive, Suite 200, ORLANDO, FLORIDA 32804
T 407.975.1273 F 407.975.1278 www.leainc.com
Christopher S. Grammier, P.E. 69919
Bruce C. Hall PLA LA0001367
Florida Firm Registration No. 28050

PERMIT DOCUMENTS
SPECIALTY ORTHOPEDIC CLINIC
LADY LAKE, LAKE COUNTY, FLORIDA

NO.	DATE	DESCRIPTION	BY	CHK	APV

PROJECT NUMBER
20150902

DRAWING NUMBER
IR-4

DRAWING NAME
IRRIGATION NOTES

C:\Users\asmit_000\Desktop\Lady Lake\Revised41316\20150902-irrigation.dwg:IR-4 Apr 14, 2016 asmit_000

SPRG OF FLORIDA | LADY LAKE - CLINIC BUILDING

P2.00 - EXTERIOR ELEVATIONS

studio+
Architecture | Interior Design | Planning
studioplusarch.com

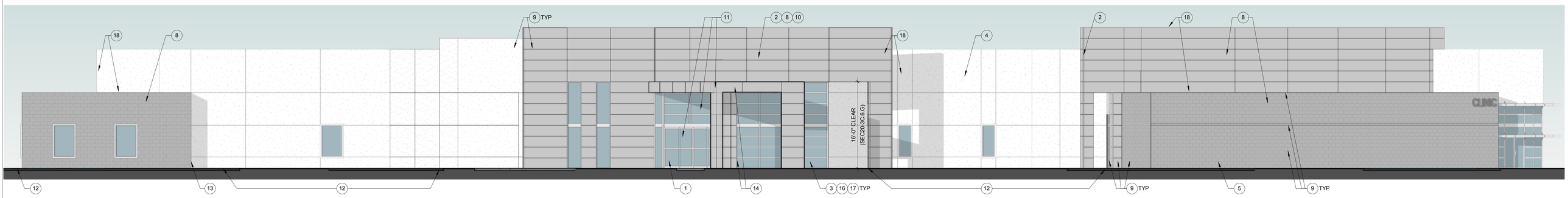

NORTH ELEVATION | 1

1/8" = 1'-0"

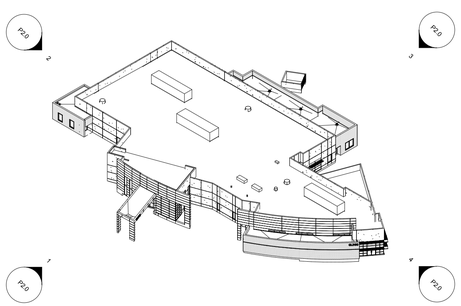

AXO FROM NORTH WEST | 6

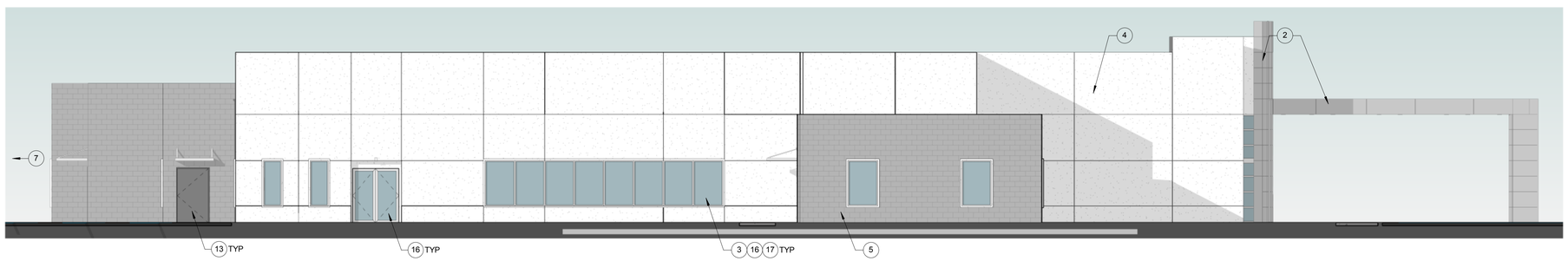

EAST ELEVATION | 2

1/8" = 1'-0"

KEY NOTES - SDP ELEVATIONS

1	PRIMARY/ FRONT FACADE AND ENTRANCE IS ORIENTED TOWARDS THE PUBLIC RIGHT-OF-WAY. (SEC. 20-3C.2.A)
2	(P1) METAL PANEL WALL COMPLIES WITH MODERN ARCHITECTURAL STYLE. (SEC. 20-3C.3.D). THIS MATERIAL DOES NOT COMPLY WITH LISTED PROHIBITED MATERIALS (SEC. 20-3C.8.B).
3	(P4) STOREFRONT COMPLIES WITH MODERN ARCHITECTURAL STYLE. (SEC. 20-3C.3.D)
4	(P2) WHITE PORTLAND CEMENT PLASTER COMPLIES WITH MODERN ARCHITECTURAL STYLE. (SEC. 20-3C.3.D & 20-3C.8.C)
5	(P3) SPLIT FACE BLOCK COMPLIES WITH MODERN ARCHITECTURAL STYLE. (SEC. 20-3C.3.D)
7	THE EXISTING ADJACENT BUILDING DOES NOT COMPLY WITH THE LAND DEVELOPMENT CODE. THE EXISTING BUILDINGS FLOOR ELEVATION IS APPROXIMATELY 20'-0" HIGHER THAN THE PROPOSED PROJECT, MAKING CONTINUITY BETWEEN BUILDING ELEMENTS UNFEASIBLE (SEC. 20-3C.4.A)
8	SUBSTANTIAL ARCHITECTURAL ELEMENT THAT PROJECTS / RECESSES FROM THE BUILDING. (SEC. 20-3C.4.B)
9	FACADES INCLUDE (3) OF THE FOLLOWING ELEMENTS WITHIN 20 HORIZONTAL FEET AND 10 VERTICAL FEET: CHANGE IN PLANE, ARCADES, CHANGE IN COMPATIBLE MATERIALS, CHANGES IN TEXTURE, DOORS, WINDOWS / STOREFRONTS. (SEC. 20-3C.4.C)
10	ARCHITECTURALLY PROMINANT PUBLIC ENTRANCE. (SEC. 20-3C.4.D)
11	AT LEAST 60% OF THE PRIMARY FACADE CONTAINS THE FOLLOWING ELEMENTS: PUBLIC ENTRANCES, ROOF TREATMENTS, WINDOWS, AWNINGS, & LANDSCAPING. SEE NOTE #12 FOR LANDSCAPED AREAS. (SEC. 20-3C.4.E)
12	EXTENT OF LANDSCAPING ALONG PRIMARY FACADE. (SEC. 20-3C.4.E)
13	ARCHITECTURAL EMBELISHMENTS, AWNINGS, LANDSCAPING, AND SAIGNAGE ARE USED TO MARK SECONDARY ENTRANCES AND THE DESIGN OF THE REAR OF THE BUILDING IS CONSISTANT WITH THE PRIMARY FACADE. (SEC. 20-3C.4.F)
14	THE PRIMARY FACADE HAS A CLEARLY DEFINED, HIGHLY VISIBLE CUSTOMER ENTRANCE FEATURING A PORTICO, VARIATIONS IN BUILDING HEIGHT, RECESSES, & WINDOWS. (SEC. 20-3C.5.C)
15	REAR ENTRANCES THAT HAVE RIGHT-OF-WAY VISIBILITY ARE EMBELLISHED SIMILAR OT THE PRIMARY FACADE. (SEC. 20-3C.5.D)
16	ALL GLAZING IS TRANSPARENT. ALL GLAZING HAS A VISIBLE LIGHT REFLECTANCE OF RATING OF (15) PERCENT OR LESS & A VISIBLE LIGHT TRANSMITANCE OF RATING OF (35) OR GREATER. (SEC. 20-3C.6.A)
17	WINDOWS ARE RECESSED A MINIMUM OF 1-1/2" & HAVE VISIBILY PROMINANT SILLS / STUCCO RELIEFS. (SEC. 20-3C.6.B)
18	ROOFTOP CONSISTS OF STEPPED PARAPETS OF DIFFERENT COLORED MATERIALS. (SEC. 20-3C.7.A)

GENERAL NOTES - SDP ELEVATIONS

A	THERE IS NO MIRRORED GLASS OR CURTAIN WALL ON THIS PROPOSED PROJECT. (SEC20-3C.6.D).
B	BANDS OF COLOR ARE NOT USED AS A ROOF TREATMENT. (SEC.20-3C.7.B)
C	CORNICES ARE NOT USED. (SEC.20-3C.7.C)
D	MANSARD ROOFS ARE NOT INCORPORATED INTO THE DESIGN. SEC.20-3C.7.D.)
E	AWNINGS ARE NOT INCORPORATED INTO THE DESIGN. (SEC.20-3C.6.E - SEC.20-3C.6.J)
F	MANSARD ROOFS ARE NOT INCORPORATED INTO THE DESIGN (SEC.20-3C.7.D)
G	FLAT ROOFS ARE HIDDEN FROM PUBLIC VIEW BY A PARAPET OF NOT LESS THAN THREE FEET IN HEIGHT. THE PRIMARY FACADE HAS (5) ROOF PLANES (SEC. 20-3C.7.E).
H	(SEC. 20-3C.7.F)
I	SELECTED MATERIALS HAVE QUALITY AND STABILITY IN TERMS OF DURABILITY, FINISH AND APPEARANCE. (SEC.20-3C.8.A)
J	EXTERIOR BUILDING MATERIALS INCLUDE RECOMMENDED
K	THE GARBAGE ENCLOSURE WILL BE FINISHED WITH PORTLAND CEMENT PLASTER TO MATCH THE BUILDING. (SEC.20-3C.11.A & SEC.20-3C.11.D)
L	MECHANICAL EQUIPMENT WILL BE INTEGRATED INTO HTE MASS OF THE BUILDING BY SCREENING IT BEHIND PARAPETS. (SEC.20-3C.11.B)
M	LOADING AREAS, WASTE DISPOSAL, AND OTHER SERVICE SUPPORT EQUIPMENT WILL BE LOCATED HEBIND THE BUILDING LINE AND FULLY SCREENED FROM VIEW OF ADJACENT PROPERTIES. ((SEC.20-3C.11.C)

N.T.S.

04/12/16

SPRG OF FLORIDA | LADY LAKE - CLINIC BUILDING

P2.01 - EXTERIOR ELEVATIONS

studio+
Architecture | Interior Design | Planning
studioplusarch.com

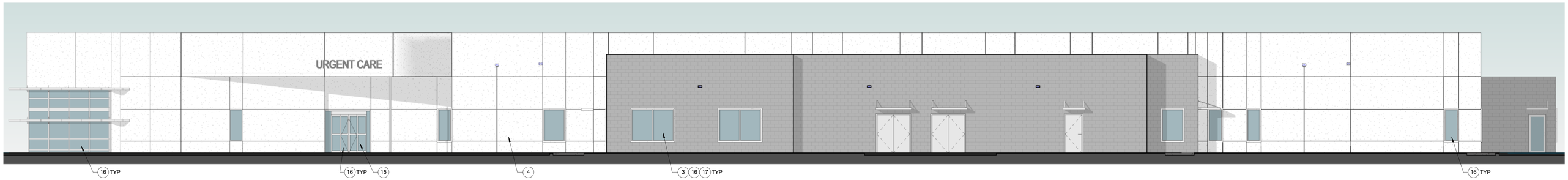

SOUTH ELEVATION | 1
1/8" = 1'-0"

(P1) METAL WALL PANEL

(P2) PORTLAND CEMENT W/ SHERWIN-WILLIAMS PURE WHITE PAINT (SW 7005). SEC. 20-3C.9.E

(P3) SPLITFACE CONCRETE BLOCK

(P4) GLAZING

MATERIAL SWATCHES | 3
12" = 1'-0"

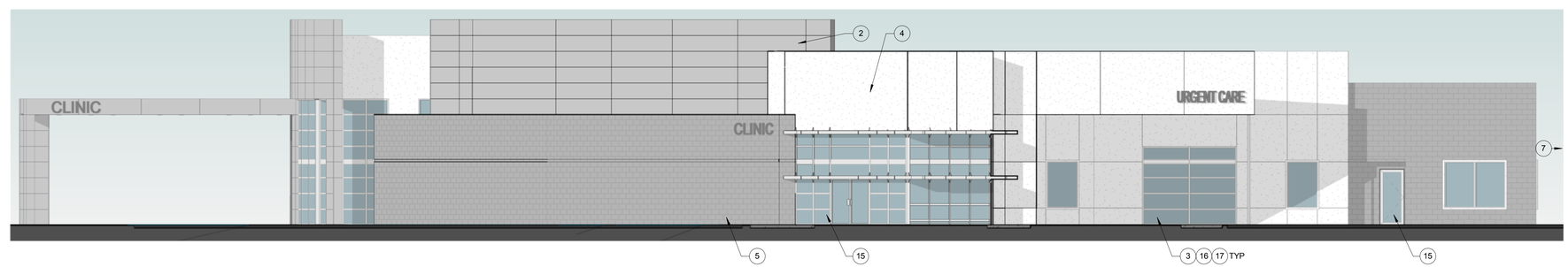

WEST ELEVATION | 2
1/8" = 1'-0"

KEY NOTES - SDP ELEVATIONS

1	PRIMARY/ FRONT FACADE AND ENTRANCE IS ORIENTED TOWARDS THE PUBLIC RIGHT-OF-WAY. (SEC. 20-3C.2.A)
2	(P1) METAL PANEL WALL COMPLIES WITH MODERN ARCHITECTURAL STYLE. (SEC. 20-3C.3.D). THIS MATERIAL DOES NOT COMPLY WITH LISTED PROHIBITED MATERIALS (SEC. 20-3C.8.B).
3	(P4) STOREFRONT COMPLIES WITH MODERN ARCHITECTURAL STYLE. (SEC. 20-3C.3.D)
4	(P2) WHITE PORTLAND CEMENT PLASTER COMPLIES WITH MODERN ARCHITECTURAL STYLE. (SEC. 20-3C.3.D & 20-3C.8.C)
5	(P3) SPLIT FACE BLOCK COMPLIES WITH MODERN ARCHITECTURAL STYLE. (SEC. 20-3C.3.D)
7	THE EXISTING ADJACENT BUILDING DOES NOT COMPLY WITH THE LAND DEVELOPMENT CODE. THE EXISTING BUILDINGS FLOOR ELEVATION IS APPROXIMATELY 20'-0" HIGHER THAN THE PROPOSED PROJECT, MAKING CONTINUITY BETWEEN BUILDING ELEMENTS UNFEASIBLE (SEC. 20-3C.4.A)
8	SUBSTANTIAL ARCHITECTURAL ELEMENT THAT PROJECTS / RECESSES FROM THE BUILDING. (SEC. 20-3C.4.B)
9	FACADES INCLUDE (3) OF THE FOLLOWING ELEMENTS WITHIN 20 HORIZONTAL FEET AND 10 VERTICAL FEET: CHANGE IN PLANE, ARCADES, CHANGE IN COMPATIBLE MATERIALS, CHANGES IN TEXTURE, DOORS, WINDOWS / STOREFRONTS. (SEC. 20-3C.4.C)
10	ARCHITECTURALLY PROMINANT PUBLIC ENTRANCE. (SEC. 20-3C.4.D)
11	AT LEAST 60% OF THE PRIMARY FACADE CONTAINS THE FOLLOWING ELEMENTS: PUBLIC ENTRANCES, ROOF TREATMENTS, WINDOWS, AWNINGS, & LANDSCAPING. SEE NOTE #12 FOR LANDSCAPED AREAS. (SEC. 20-3C.4.E)
12	EXTENT OF LANDSCAPING ALONG PRIMARY FACADE. (SEC. 20-3C.4.E)
13	ARCHITECTURAL EMBELISHMENTS, AWNINGS, LANDSCAPING, AND SAIGNAGE ARE USED TO MARK SECONDARY ENTRANCES AND THE DESIGN OF THE REAR OF THE BUILDING IS CONSISTANT WITH THE PRIMARY FACADE. (SEC. 20-3C.4.F)
14	THE PRIMARY FACADE HAS A CLEARLY DEFINED, HIGHLY VISIBLE CUSTOMER ENTRANCE FEATURING A PORTICO, VARIATIONS IN BUILDING HEIGHT, RECESSES, & WINDOWS. (SEC. 20-3C.5.C)
15	REAR ENTRANCES THAT HAVE RIGHT-OF-WAY VISIBILITY ARE EMBELLISHED SIMILAR OT THE PRIMARY FACADE. (SEC. 20-3C.5.D)
16	ALL GLAZING IS TRANSPARENT. ALL GLAZING HAS A VISIBLE LIGHT REFLECTANCE OF RATING OF (15) PERCENT OR LESS & A VISIBLE LIGHT TRANSMITANCE OF RATING OF (35) OR GREATER. (SEC. 20-3C.6.A)
17	WINDOWS ARE RECESSED A MINIMUM OF 1-1/2" & HAVE VISIBILY PROMINANT SILLS / STUCCO RELIEFS. (SEC. 20-3C.6.B)
18	ROOFTOP CONSISTS OF STEPPED PARAPETS OF DIFFERENT COLORED MATERIALS. (SEC. 20-3C.7.A)

GENERAL NOTES - SDP ELEVATIONS

A	THERE IS NO MIRRORED GLASS OR CURTAIN WALL ON THIS PROPOSED PROJECT. (SEC20-3C.6.D).
B	BANDS OF COLOR ARE NOT USED AS A ROOF TREATMENT. (SEC.20-3C.7.B)
C	CORNICES ARE NOT USED. (SEC.20-3C.7.C)
D	MANSARD ROOFS ARE NOT INCORPORATED INTO THE DESIGN. SEC.20-3C.7.D.)
E	AWNINGS ARE NOT INCORPORATED INTO THE DESIGN. (SEC.20-3C.6.E - SEC.20-3C.6.J)
F	MANSARD ROOFS ARE NOT INCORPORATED INTO THE DESIGN (SEC.20-3C.7.D)
G	FLAT ROOFS ARE HIDDEN FROM PUBLIC VIEW BY A PARAPET OF NOT LESS THAN THREE FEET IN HEIGHT. THE PRIMARY FACADE HAS (5) ROOF PLANES (SEC. 20-3C.7.E).
H	(SEC. 20-3C.7.F)
I	SELECTED MATERIALS HAVE QUALITY AND STABILITY IN TERMS OF DURABILITY, FINISH AND APPEARANCE. (SEC.20-3C.8.A)
J	EXTERIOR BUILDING MATERIALS INCLUDE RECOMMENDED
K	THE GARBAGE ENCLOSURE WILL BE FINISHED WITH PORTLAND CEMENT PLASTER TO MATCH THE BUILDING. (SEC.20-3C.11.A & SEC.20-3C.11.D)
L	MECHANICAL EQUIPMENT WILL BE INTEGRATED INTO HTE MASS OF THE BUILDING BY SCREENING IT BEHIND PARAPETS. (SEC.20-3C.11.B)
M	LOADING AREAS, WASTE DISPOSAL, AND OTHER SERVICE SUPPORT EQUIPMENT WILL BE LOCATED HEBIND THE BUILDING LINE AND FULLY SCREENED FROM VIEW OF ADJACENT PROPERTIES. ((SEC.20-3C.11.C)

N.T.S.

04/12/16

SPRG OF FLORIDA | LADY LAKE - CLINIC BUILDING

P2.02 - MAIN ENTRY PERSPECTIVE VIEW

studio+
Architecture | Interior Design | Planning
studioplusarch.com

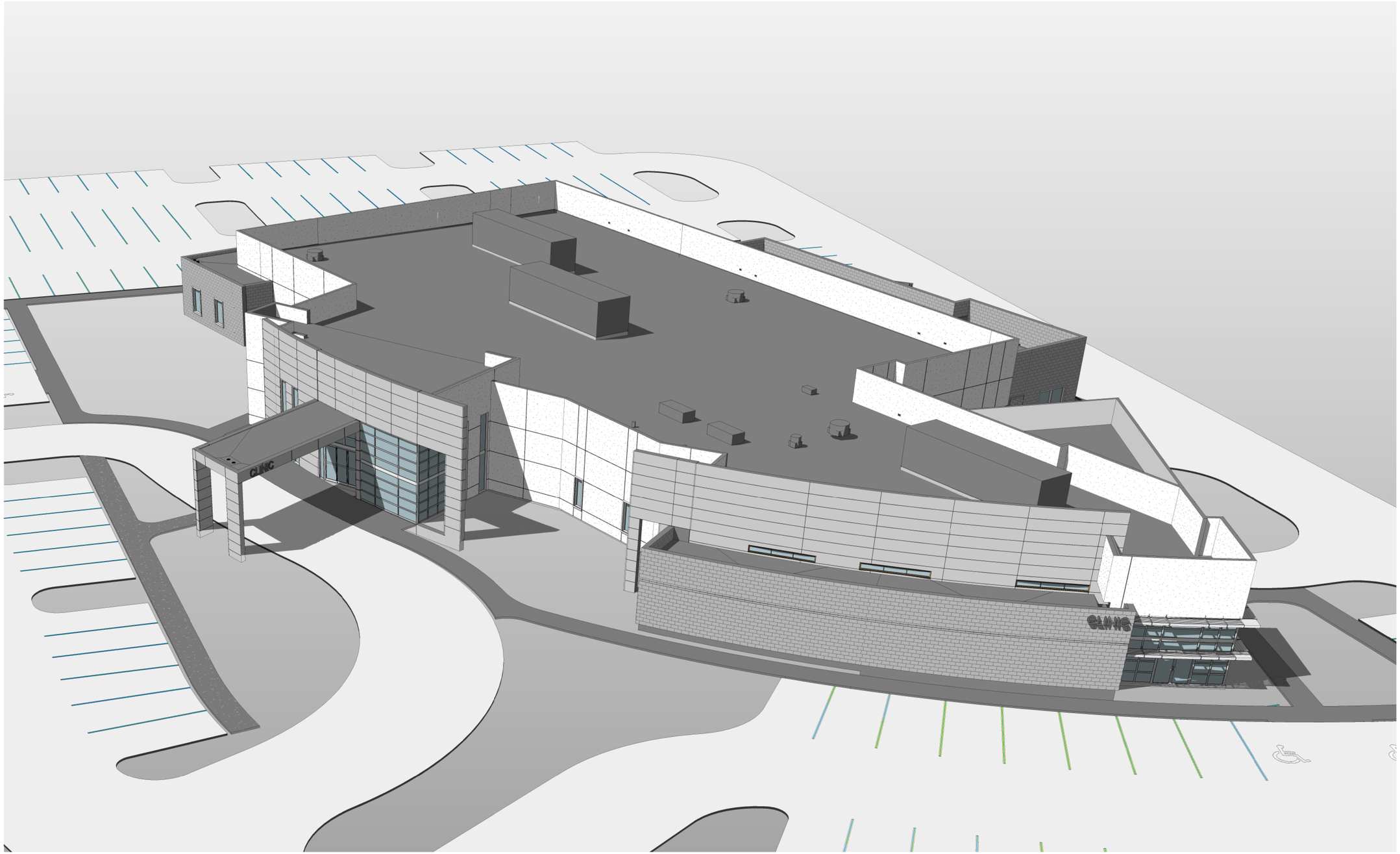

N.T.S.

04/12/16

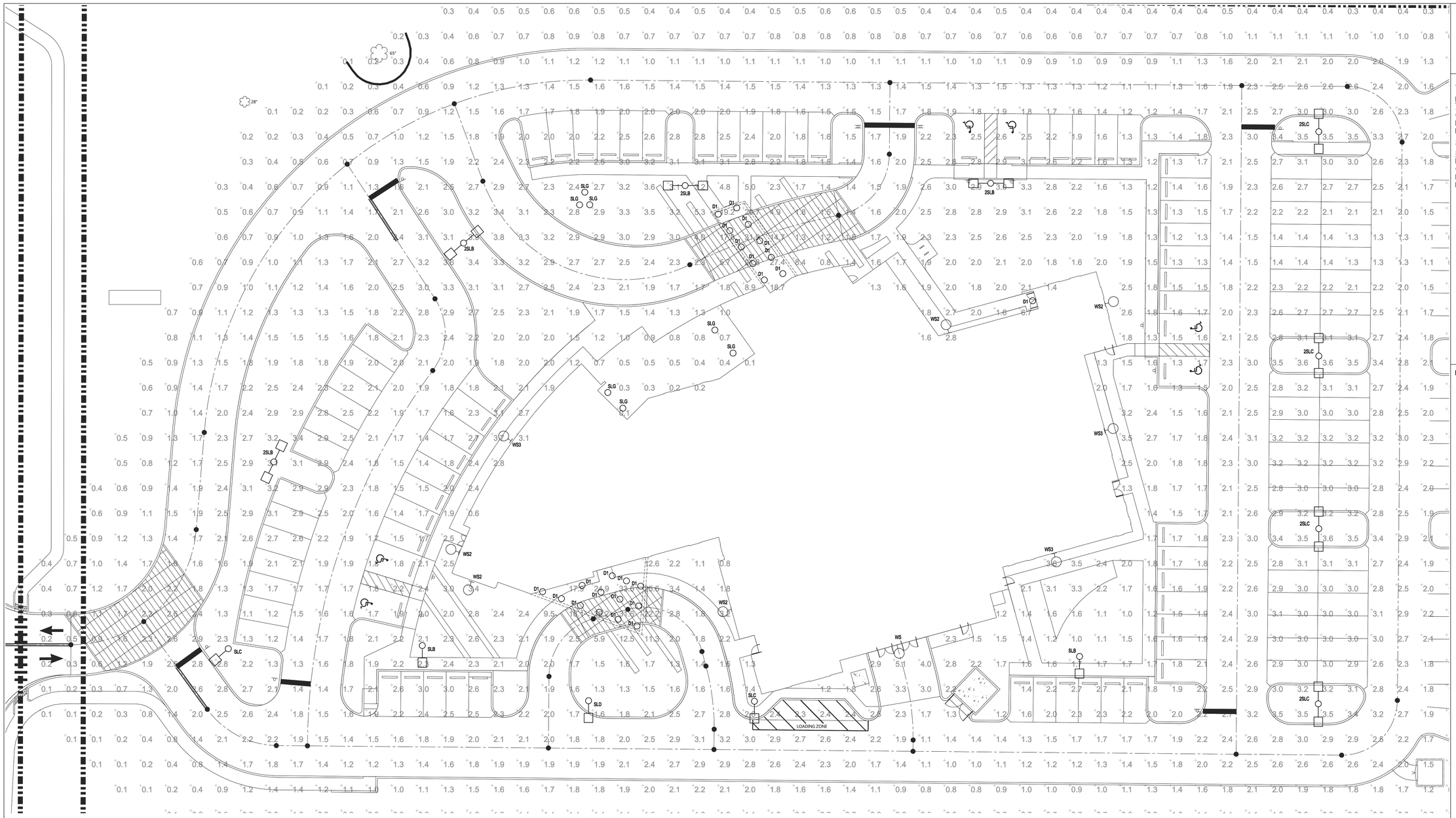

SITE LIGHT FIXTURE SCHEDULE

TYPE	DESCRIPTION	MANUFACTURER	MODEL NUMBER	VOLTAGE	REQUIRED LAMPS		REMARKS
					NUM	TYPE	
SLB	SHOEBOX LED SITE FIXTURE WITH 27' POLE HEIGHT, 3' BASE, TYPE TFTM DISTRIBUTION.	LITHONIA	DSX1-LED-60C-700-40K-TFTM OR APPROVED EQUAL	480V	1	16000LM 70CRI 131W 4000K LED	
SLC	SHOEBOX LED SITE FIXTURE WITH 27' POLE HEIGHT, 3' BASE, TYPE 2M DISTRIBUTION	LITHONIA	DSX1-LED-60C-530-40K-T2S OR APPROVED EQUAL	480V	1	13000LM 70CRI 99W 4000K LED	
SLD	SHOEBOX LED SITE FIXTURE WITH 27' POLE HEIGHT, 3' BASE, TYPE 5M DISTRIBUTION	LITHONIA	DSX1-LED-60C-700-40K-T5M OR APPROVED EQUAL	480V	1	16000LM 70CRI 131W 4000K LED	
2SLB	(2) SHOEBOX LED SITE FIXTURE WITH 27' POLE HEIGHT, 3' BASE, TYPE TFTM DISTRIBUTION. HEADS ARE 180 DEGREES APART.	LITHONIA	(2)DSX1-LED-60C-700-40K-TFTM OR APPROVED EQUAL	480V	2	16000LM 70CRI 131W 4000K LED	
2SLC	SHOEBOX LED SITE FIXTURE WITH 27' POLE HEIGHT, 3' BASE, TYPE 2M DISTRIBUTION. HEADS ARE 180 DEGREES APART.	LITHONIA	(2)DSX1-LED-60C-530-40K-T2S OR APPROVED EQUAL	480V	2	13000LM 70CRI 99W 4000K LED	
WS	WALL SCONCE WITH T4M DISTRIBUTION AND EMERGENCY BATTERY BACKUP	LITHONIA	DSXW1-LED-20C-1000-40K-T2M-ELCW OR APPROVED EQUAL	480V	1	7500LM 70CRI 74W 4000K LED	
WS2	ARCHITECTURAL WALL SCONCE WITH TYPE 3 DISTRIBUTION AND BATTERY BACKUP	LITHONIA	WSQ-LED-2-10A700/40K-SR4-MVOLT-ODBXD	480V	1	3900LM 70CRI 47W 4000K LED	
WS3	WALL SCONCE WITH T2M DISTRIBUTION AND EMERGENCY BATTERY BACKUP	LITHONIA	DSXW1-LED-20C-530-40K-T2M-ELCW OR APPROVED EQUAL	480V	1	4400LM 70CRI 36W 4000K LED	
SLF	IN-GRADE LED FIXTURE WITH NARROW FLOOD DISTRIBUTION	LITHONIA	M9710C-A-LED-P4-40K-MVOLT-NFL-FLC20-FLC20SR-12B-IDIM-BL	277V	1	5200LM 70CRI 53W 4000K LED	
SFG	IN-GRADE LED FIXTURE WITH WIDE FLOOD DISTRIBUTION	LITHONIA	M9710C-A-LED-P4-40K-MVOLT-WFL-FLC20-FLC20SR-12B-IDIM-BL	277V	1	4500LM 70CRI 53W 4000K LED	

studio+
California | **Florida** | Nevada
2211 E 7th Ave, Suite A, Tampa, Florida 33605
P: 239.357.4983 AA26002373

TLC ENGINEERING
MEP&FP
255 South orange Avenue, Suite 1600
Orlando, FL 32801-3463
P: 407.841.9050
LICENSE #: COA 00015

SELECT STRUCTURAL
STRUCTURAL
P.O. Box 151251
Cape Coral, FL 33915
P: 239.244.1242
LICENSE #: CA 28357

255 S. Orange Avenue
Suite 1600
Orlando, Florida 32801
Phone: 407-841-9050
Fax: 407-540-0234
www.tlc-engineers.com

© Copyright 2011 TLC Engineering for Architecture, Inc.
COA 15 TLC NO: 116319
DRAWN BY: CFB CHECKED BY: CFB

REVISIONS:

James Ferris, P.E.
Florida License #65156
Seal

ARCHITECT OF RECORD:
JOSE A PEREZ, NCARB AIA
AR97653

NOT FOR CONSTRUCTION

PROJECT TITLE:
SPRG of Florida
SPRG Lady Lake

PROJECT ADDRESS:
539 Rolling Acres Rd. Lady Lake, FL 32159

PROJECT NUMBER:
FLTSP150xx

SHEET TITLE:
PARTIAL SITE PLAN - LIGHTING

PARTIAL SITE PLAN 1
1/16" = 1'-0"

PROJECT NORTH TRUE NORTH

E1.01

© 2015 Studio+

L:\2016-Jobs\116319-Lady Lake Outpatient Clinic\CAD-MEP\Sheets E1.01.dwg 4/13/2016 4:59:11 PM christopher.bond

2/22/2016 1:41:53 PM

P.S.

J-5

TOWN COMMISSION AGENDA ITEM

REQUESTED COMMISSION MEETING DATE: May 16, 2016

SUBJECT: Consideration of contract award to construct the final phase of WWTP Aeration Improvements.

DEPARTMENT: Public Works- Utilities- Sewer

STAFF RECOMMENDED MOTION: Approve the U.S. Water Services Corporation bid in the amount of $286,136.00 (Base Bid only) and the requested contingency funds.

SUMMARY: The Town identified a number of projects within the 2014 Wastewater & Reuse Master Plan. The Town has completed one phase of these improvements. Town Commission approved bidding out the second and final phase of this work in February of 2016. This phase of work will complete the system for operation by adding the necessary redundant blower, rehabilitating the influent structure, replacing the clarifier drive, electrical improvements, and other miscellaneous improvements at the site. The Public Works Director would request that contingency funds be approved up to the contract amount for any change orders that may arise as a part of this contract. If the funds are not utilized, they will remain in Utilities Retained Earnings. Contingency funds allow the project to keep moving forward without work stoppage for additional funding approval from Town Commission.

FISCAL IMPACT: $286,136 ***(estimated)***
(Town presently has $2.67M in Utilities Retained Earnings – eligible for non-impact fee projects)

[X] **Capital Budget**
[ ] **Operating**
[ ] **Other**

ATTACHMENTS: [ ] **Ordinance** [ ] **Resolution** [ ] **Budget Resolution**

[ ] **Other** [X] **Support Documents – Bid Documents prepared by Mittauer & Associates, Inc.**

DEPARTMENT HEAD **Submitted** **Date** 5/5/16

FINANCE DEPARTMENT **Approved as to Budget Requirements** **Date** 5/5/16

TOWN MANAGER **Approved Agenda Item for:** 5/16/16 **Date** 5/5/16

COMMISSION ACTION:

[ ] **Approved as Recommended** [ ] **Disapproved** [ ] **Tabled Indefinitely**

[ ] **Continued to Date Certain** [ ] **Approved with Modification**

MITTAUER
& ASSOCIATES, INC.
CONSULTING ENGINEERS &
PROJECT FUNDING SPECIALISTS

580-1 WELLS ROAD
ORANGE PARK, FL 32073
PHONE: (904) 278-0030
FAX: (904) 278-0840
WWW.MITTAUER.COM

April 22, 2016

Mayor and Town Commission
Town of Lady Lake
136 Skyline Drive
Lady Lake, FL 32159

RE: Engineer's Recommendation of Award
WWTF No. 2 Aeration Improvements
Town of Lady Lake, Florida
Mittauer & Associates, Inc. Project No. 9514-25-1

Dear Mayor and Town Commission Members:

On April 12, 2016, four (4) bids were received in response to the Town's Advertisement for Bids on the WWTF No. 2 Aeration Improvements Project. We have reviewed the bids and have found the below listed Contractor to be low bidder for this project. Attached is a copy of the Certified Bid Tabulation which we have prepared. Contingent upon approval by you and your attorney, as well as receipt of proper bonds and insurance certificates, we recommend that the project be awarded as follows:

CONTRACTOR: U.S. Water Services Corporation
4939 Cross Bayou Boulevard
New Port Richey, FL 34652
Tel: (727) 848-8292
Fax: (727) 849-8860
e-mail: cccrego@uswatercorp.net

LUMP SUM BID PRICE FOR
BASE BID AWARD AMOUNT: $286,136.00

We look forward to continuing our services on the Construction Phase of this project. As always, we remain available to answer any questions.

Sincerely yours,
Mittauer & Associates, Inc.

Jason R. Shepler, P.E.
Senior Project Director

JRS/pj
Enclosure

Wastewater Treatment Facility No. 2 Aeration Improvements
Town of Lady Lake, Florida
Mittauer & Associates, Inc. Project No. 9514-25-1

CERTIFIED BID TABULATION
Bids Received by 4/12/16 at 2:00 p.m.
By:
Page 1 of 1

	1 U.S. Water Services Corporation	2 McMahan Construction Co., Inc.	3 TLC Diversified, Inc.	4 Danus Utilities, Inc.
Lump Sum Bid Price for Base Bid	**$286,136**	**$309,000**	**$329,800**	**$397,097**
Additive Alt. No. 1 (WWTP No. 2 Concrete Coating)	$269,297	$226,000	$233,100	$254,817
Total Base Bid + Add.Alt. No.1	**$555,433**	**$535,000**	**$562,900**	**$651,914**
Additive Alt. No. 2 (Influent Structure Channel Rehab)	$40,215	$30,000	$43,300	$38,900
Total Base Bid + Add.Alt. No.1 + Add. Alt. No. 2	**$595,648**	**$565,000**	**$606,200**	**$690,814**

MITTAUER
& ASSOCIATES, INC.
CONSULTING ENGINEERS &
PROJECT FUNDING SPECIALISTS

580-1 WELLS ROAD
ORANGE PARK, FL 32073
PHONE: (904) 278-0030
FAX: (904) 278-0840
WWW.MITTAUER.COM

BID OPENING

WASTEWATER TREATMENT FACILITY NO. 2 AERATION IMPROVEMENTS
TOWN BID NO. 2016-0002
TOWN OF LADY LAKE, FLORIDA
MITTAUER & ASSOCIATES, INC. PROJECT NO. 9514-25-1
APRIL 12, 2016; 2:00 PM

BIDDER'S NAME	LUMP SUM BID PRICE FOR BASE BID	ADDITIVE ALT. NO. 1 (WWTP No. 2 Concrete Coating)	ADDITIVE ALT. NO. 2 (Influent Structure Channel Rehab)
CenState Contractors, Inc.			
Danus Utilities, Inc.	397,097	254,817	38,900
E&D Contracting Services, Inc.			
McMahan Construction Co., Inc.	309,000	226,000	30,000
Sawcross, Inc.			
SGS Contracting Services, Inc.			
TLC Diversified, Inc.	329,800	233,100	43,300
U.S. Water Services Corproation	286,136	269,297	40,215

K-6

TOWN COMMISSION AGENDA ITEM

REQUESTED COMMISSION MEETING DATE: May 16, 2016

SUBJECT: Declaration of Qualifying Dates for the Office of Town Commissioner for Wards Two and Four for the November 8, 2016 General Election, and authorization to request that the Lake County Supervisor of Elections conduct the election.

DEPARTMENT: Town Clerk

STAFF RECOMMENDED MOTIONS:

1. Approval of Resolution No. 2016-104 declaring the qualifying dates for the November 8, 2016 General Election.

2. Authorization for the Town Clerk to request that the Lake County Supervisor of Elections conduct the general election for the Town.

SUMMARY:

A request is being made by the Town Clerk to adopt Resolution No. 2016-104 which announces the qualifying dates for Town Commissioner candidates for the general election, to be held on November 8, 2016. The qualifying period will begin June 20, 2016 at 12:00 noon and end on June 24, 2016 at 12:00 noon.

In addition, a request is being made to authorize the Town Clerk to request that Emogene Stegall, Supervisor of Elections for Lake County, conduct the November 8, 2016 general election for the Town of Lady Lake.

FISCAL IMPACT: **To Be Determined**

[ ] **Capital Budget**
[ ] **Operating**
[ ] **Other**

ATTACHMENTS: [ ] **Ordinance** [X] **Resolution** [ ] **Budget Resolution**
[ ] **Other**
[ ] **Support Documents/Contracts**

DEPARTMENT HEAD	**Submitted** 5/4/16	**Date**
FINANCE DEPARTMENT	**Approved as to Budget Requirements**	**Date**
HR	**Approved as to Form**	**Date**
TOWN ATTORNEY	**Approved as to Form and Legality**	**Date**
TOWN MANAGER	**Approved Agenda Item for:** 5/16/16	**Date**

COMMISSION ACTION:

[ ] **Approved as Recommended** [ ] **Disapproved** [ ] **Tabled Indefinitely**

[ ] **Continued to Date Certain** [ ] **Approved with Modification**

1
2

RESOLUTION NO. 2016-104

A RESOLUTION DECLARING QUALIFYING DATES FOR THE OFFICE OF TOWN COMMISSIONER FOR WARDS TWO AND FOUR OF THE TOWN OF LADY LAKE, FLORIDA; SPECIFYING QUALIFICATIONS FOR CANDIDATES; PROVIDING FOR POSTING NOTICE OF QUALIFICATION DATES; PROVIDING FOR AN EFFECTIVE DATE.

BE IT RESOLVED BY THE TOWN COMMISSION OF THE TOWN OF LADY LAKE, FLORIDA:

SECTION 1. There is hereby declared a general election for the offices of Town Commissioner for Wards Two and Four, which election shall be held on November 8, 2016, in Lady Lake, Florida.

SECTION 2. Candidates for the office of Town Commissioner for Wards Two and Four of the Town of Lady Lake, Florida, must qualify for office by filing a written petition pursuant to Section 10.02 of the Town of Lady Lake Charter with the Town Clerk, to be submitted beginning June 20, 2016 at 12:00 noon through June 24, 2016 at 12:00 noon. Candidate petitions may be obtained from the Town Clerk during regular business hours.

SECTION 3. The Mayor shall announce the election and foregoing qualification dates at each regular meeting prior to June 20, 2014, and shall cause a copy of this Resolution to be posted in a conspicuous place at Town Hall.

PASSED AND RESOLVED this 16th day of May, 2016, by the Town Commission of the Town of Lady Lake, Florida.

_____
Ruth Kussard, Mayor

_____
Kristen Kollgaard, Town Clerk

_____
Approved as to form:
Derek Schroth, Town Attorney

DRAFT

K-7

TOWN COMMISSION AGENDA ITEM

REQUESTED COMMISSION MEETING DATE: MAY 16, 2016 – Second/Final Reading

---

SUBJECT: **Ordinance 2016-11 – Annexation of Property Being 0.64 +/- Acres of Land Owned by the Villages of Lake-Sumter, Inc., John and Patricia Porto, and Pamela A. Barsness, referenced by Alternate Keys 1482461, 2717963, 2717831, 2665947, 1483921; 5 Lots, Which Are Located Within Orange Blossom Gardens Units 1, 3, And 3.1b**

DEPARTMENT: **GROWTH MANAGEMENT**

STAFF RECOMMENDED MOTIONS:

Staff Recommends approval of Ordinance 2016-11- The Villages of Lake-Sumter, Inc. John and Patricia Porto, And Pamela A. Barsness – Requesting Annexation of 5 lots consisting of approximately 0.64 +/- acres of land which are located within Orange Blossom Gardens Units 1, 3, and 3.1B within Lake County, Florida.

Applicant, Martin L. Dzuro, on behalf of the Villages of Lake-Sumter, Inc., John and Patricia Porto, and Pamela A. Barsness, has filed applications to annex properties consisting of 5 Lots located north of Griffin Avenue and northeast of North Highway 27/441 within the Orange Blossom Garden Subdivisions Units 1, 3, and 3.1B. The annexation application involves 0.64 +/- acres of property from unincorporated Lake County into the Town of Lady Lake.

The 5 lots are spread out along different roads and include the following addresses:

- 1026 Aloha Way
- 803 Aloha Way
- 811 Truman Avenue
- 815 Royal Palm Avenue
- 817 Royal Palm Avenue

The subject properties lie in Section 06, Township 18 South, Range 24 East, in Lake County, Florida. Appropriate legal descriptions, a location map, and a sketch of the property have been included with the submitted application. All lots will be served by the Village Center Community Development District Central Water and Sewer System, as well as the District's Fire Department.

In accordance with the provisions of Florida Statute 171.205, and the Interlocal Service Boundary Agreement executed September 4, 2013 between Lake County,

Florida and the Town of Lady Lake, Florida, the Town may annex property into the Town which are non-contiguous to the existing municipal boundary. The proposed properties under this application exist as non-contiguous lots.

The annexation application was received on Monday, February 29, 2016, and has been reviewed and determined to be complete satisfying the necessary criteria as required for annexation under statutory requirements. The application was found to meet the requirements of the Land Development Regulations (LDRs) as well as the adopted Comprehensive Plan, and is ready for transmittal to the Town Commission.

Notices to inform the surrounding property owners (70) within 150 feet of the properties proposed by annexation request were mailed Thursday, March 24, 2016. The properties were also posted Thursday, March 24, 2016.

Past Actions:

The **Technical Review Committee (TRC)** members individually reviewed application for Ordinance 2016-11, and determined the application to be complete and ready for transmittal to the P&Z Board.

At the April 11, 2016 meeting, the **Planning and Zoning Board** recommended approval of Ordinance 2016-11 by a vote of 3-0.

At the May 2, 2016 meeting, the **Town Commission** voted 5-0 for approval of Ordinance 2016-11 upon First Reading.

FISCAL IMPACT: $ TBD – pending value of future homes

[ ] Capital Budget **[ ] Operating** **[ ] Other**

ATTACHMENTS: **[X] Ordinance(s)** **[ ] Resolution** **[ ] Budget Resolution**

[ ] Other

[ ] Support Documents/Contracts Available for Review in Manager's Office

---

DEPARTMENT HEAD	**Submitted** 5/9/16	**Date**
(W) 5/9/2016 **FINANCE DEPARTMENT**	**Approved as to Budget Requirements**	**Date**
TOWN ATTORNEY	**Approved as to Form and Legality**	**Date**
TOWN MANAGER For KK	**Approved Agenda Item for:** 5-16-16	**Date**

BOARD ACTION: **[ ] Approved as Recommended** **[ ] Disapproved**

[ ] Tabled Indefinitely **[ ] Continued to Date Certain**

[ ] Approved with Modifications

TOWN OF LADY LAKE
ANNEXATION APPLICATION

Alternate Key Number See attached list.

1. Owner's Name: The Villages of Lake-Sumter, Inc./John and Patricia Porto/Pamela A. Barsness

   Mailing Address: 1020 Lake Sumter Landing, The Villages, FL 32162/500 Elm Street Ext U North Haven, CT 06473/803 Aloha Way, Lady Lake, FL 32159

   Email Address: See below.

   Telephone #: See below.

2. Applicant's Name: The Villages of Lake-Sumter, Inc. - Martin L. Dzuro, V.P.

   Mailing Address: 1045 Lake Sumter Landing, The Villages, FL 32162

   Email Address: marty.dzuro@thevillages.com

   Telephone #: (352) 753-6262

3. Applicant is: Owner X Agent ___ Purchaser ___ Lessee ___ Optionee ___

4. Property Address/Location: See attached list.

5. Legal Description of Property to be annexed: See attached list.

6. The property is located in the vicinity of the following streets: Northeast of US 441, North of Griffin Ave.

7. Area of the property: 27,844 Square feet 0.64 Acres

8. Utilities: Central Water [✓] Central Sewer [✓] Well [ ] Septic Tank [ ]

9. Existing County zoning of property: RM - Residential Medium

10. Requested zoning of property: MX-8 - Mixed Single Family

11. Number, square footage and present use of the existing structures on the property: See attached list. If any structures, they are Residential.

12. Proposed use of the property: Residential

13. Has any land use application been filed within the last year in connection with this property? [ ] Yes [✓] No. If yes, briefly describe the nature of the request and the date this was done:

14. Attach a list of the owner's names and mailing addresses for all property lying within a one hundred fifty (150) foot radius surrounding the property legally described in this application.

13. Has any land use application been file within last year in connection with this property? ____Yes __X__No. If yes, briefly describe the nature of the request and the date when it was done:

_____

14. Attach a list of the owner's names and mailing addresses for all property lying within a one hundred fifty (150) foot radius surrounding the property legally described in this application.

Applications shall include a legal description of the property, sketch or survey of the property, Proof of ownership and authorization from if represented by an agent or contract purchaser. If the rezoning request is not consistent with the Future Land Use classification, a Comprehensive Plan Amendment must be approved prior to the rezoning.

Rezoning Fees:
Rezoning (except PUD, PFD, CP)
PUD
PFD/CP
Substantial Alterations (PUDS) Fees Paid: _____

I certify that the statements in this application are true to the best of my knowledge.

_____
Signature of Applicant

PLEASE SUBMIT THE APPLICATION, ACCOMPANIED BY THE APPROPRIATE REVIEW FEES AND FIFTY (50) COPIES OF ALL APPLICABLE INFORMATION DOCUMENTATION AS REQUIRED BY THE LADY LAKE LAND DEVELOPMENT REGULATION, ADOPTED AUGUST 15, 1994 TO THE GROWTH MANAGEMENT DEPARTMENT. ADDITIONAL COPIES OF APPLICATION AND PLANS WILL BE REQUIRED PRIOR TO CONSIDERATION AT THE PLANNING AND ZONING BOARD AND TOWN COMMISSION MEETINGS.

Office Use:

Date Application Received: 2/24/16 Received by: T. Carroll

Fees Paid: $2500.00

APPLICANT'S AFFIDAVIT

STATE OF FLORIDA
COUNTY OF LAKE

Before me, the undersigned authority personally appeared Martin L. Dzuro, V.P. The Villages of Lake-Sumter Inc., who being by me first duly sworn on oath, deposes and says:

(1) That he affirms and certifies that he understands and will comply with all ordinances, regulations and provisions of the Town of Lady Lake, Florida, and that all statements and diagrams submitted herewith are true and accurate to the best of his/her knowledge and belief, and further, that this application and attachments shall become part of the Official Records of the Town of Lady Lake, Florida, and are not returnable.

(2) That the submittal requirements for the application have been completed and attached hereto as part of this application.

(3) That the applicant desires Rezoning to the MX-8 zoning classification to allow: Mixed Single Family

(4) That the sign cards will be posted at least seven (7) days prior to the Planning and Zoning Board hearing and will remain posted until final determination by the Town Commission after which time the sign cards are to be removed.

Affiant (Applicant's Signature)

The foregoing instrument was acknowledged before me this 26th day of Feb., 20 16, by Martin L. Dzuro, who is personally known to me or who has produced _____ as identification and who did (did not) take an oath.

Notary Public

VICKI C. VARNON
MY COMMISSION EXPIRES
September 22, 2019
#FF 909781
Bonded thru Troy Fain - Insurance
NOTARY PUBLIC, STATE OF FLORIDA

CONSENT AND DESIGNATION OF AGENT

The undersigned, JOHN PORTO and PATRICIA PORTO, as Owners of Lot 74, Orange Blossom Gardens, Unit 1, according to the plat thereof recorded in Plat Book 18, Page 9, Public Records of Lake County, Florida, hereby designate Martin L. Dzuro, Vice President of The Villages of Lake-Sumter, Inc., a Florida corporation, as its Agent, and authorizes him to execute all documents on their behalf in their Application for Annexation from Lake County into the Town of Lady Lake, a Small Scale Comprehensive Plan and Rezoning, and for submission of the Property for those purposes as set forth in the documents rendered in that process.

Dated this 10th day of February, 2016.

JOHN PORTO

PATRICIA PORTO

STATE OF FLORIDA
COUNTY OF SUMTER

The foregoing instrument was acknowledged before me this 10 day of February, 2016, by JOHN PORTO and PATRICIA PORTO, who produced Com. Drivers License as identification or who are personally known to me.

Terry L. Jensen
State of Florida
MY COMMISSION # FF 140287
Expires: August 22, 2018

(SEAL)

Notary Public, State of Florida

Terry L. Jensen
Printed Name

My Commission Expires: Aug 22, 2018

CONSENT AND DESIGNATION OF AGENT

The undersigned, PAMELA A. BARSNESS, as Owners of Lot 194 Orange Blossom Gardens, Unit 3-1B, according to the plat thereof recorded in Plat Book 25, Pages 33, Public Records of Lake County, Florida, hereby designate Martin L. Dzuro, Vice President of The Villages of Lake-Sumter, Inc., a Florida corporation, as its Agent, and authorizes him to execute all documents on their behalf in their Application for Annexation from Lake County into the Town of Lady Lake, a Small Scale Comprehensive Plan and Rezoning, and for submission of the Property for those purposes as set forth in the documents rendered in that process.

Dated this 25 day of February, 2016.

Pamela A. Barsness
PAMELA A. BARSNESS

STATE OF FLORIDA
COUNTY OF ~~SUMTER~~ Lake

The foregoing instrument was acknowledged before me this 25 day of February, 2016, by PAMELA A. BARSNESS, who produced FL Driver's License as identification or who is personally known to me.

GIOVANNA FIORINO
MY COMMISSION # FF 946846
EXPIRES: December 29, 2019
Bonded Thru Notary Public Underwriters

Giovanna Fiorino
Notary Public, State of Florida
Giovanna Fiorino
Printed Name
My Commission Expires: 12/29/19

(SEAL)

Parcel ID #: 06-18-24-0100-0000-7400
Lot 74, Unit 1, Orange Blossom Gardens, according to the plat thereof recorded in Plat Book 18, Page 9, Public Records of Lake County, Florida.

Parcel ID #: 06-18-24-0350-000-19400
Lot 194, Unit 3-1B, Orange Blossom Gardens, according to the plat thereof recorded in Plat Book 25, Page 33, Public Records of Lake County, Florida.

Parcel ID #: 06-18-24-0300-000-11000
Lot 110, Unit 3, Orange Blossom Gardens, according to the plat thereof recorded in Plat Book 23, Pages 27 through 29, Public Records of Lake County, Florida.

Parcel ID #: 06-18-24-0300-000-11100
Lot 111, Unit 3, Orange Blossom Gardens, according to the plat thereof recorded in Plat Book 23, Pages 27 through 29, Public Records of Lake County, Florida.

-AND-

Parcel ID #: 06-18-24-0300-000-13100
Lot 131, Unit 3, Orange Blossom Gardens, according to the plat thereof recorded in Plat Book 23, Pages 27 through 29, Public Records of Lake County, Florida.

INSTRUMENT#:2014021217 OR BK 4444 PG 1624 PAGES: 1 2/25/2014 3:51:25 PM
NEIL KELLY, LAKE COUNTY CLERK OF THE CIRCUIT COURT
REC FEES: $10.00 DEED DOC:$630.00

90,000

Prepared by and return to:
Gary Fuchs/cps
Attorney at Law
McLin & Burnsed PA
1028 Lake Sumter Landing
The Villages, FL 32162
File No.: B00303

RETURN

Tax _____
Rec _____
Doc _____
Int _____
Total _____

[Space Above This Line For Recording Data]

Warranty Deed

This Warranty Deed made this 6th day of **February, 2014** between **Collin Priestley**, whose post office address is **#2 West 2nd St., Media, PA 19063 and Kristin Priestley**, whose post office address is 412 W. State St., Apt. #1. Media, PA 19063, grantors, and **John Porto and Patricia Porto, husband and wife**, whose post office address is **500 Elm Street Ext Unit 14-3, North Haven, CT 06473** grantees:

(Whenever used herein the terms "grantor" and "grantee" include all the parties to this instrument and the heirs, legal representatives, and assigns of individuals, and the successors and assigns of corporations, trusts and trustees)

WITNESSETH, that said grantors, for and in consideration of the sum of TEN AND NO/100 DOLLARS ($10.00) and other good and valuable considerations to said grantors in hand paid by said grantees, the receipt whereof is hereby acknowledged, has granted, bargained, and sold to the said grantees, and grantees' heirs and assigns forever, the following described land, situate, lying and being in **Lake County Florida** to-wit:

PARCEL ID #: 0618240100-000-07400

Lot 74, Unit 1, Orange Blossom Gardens, according to the plat thereof recorded in Plat Book 18, Page 9, Public Records of Lake County, Florida.

Together with the Manufactured Home, bearing VIN # 02630183 AK & BK thereon. The Titles have been retired.

This property does not constitute either the residence or the homestead of either Grantor named above as the same is defined by the Constitution or the laws of the State of Florida.

TOGETHER with all the tenements, hereditaments and appurtenances thereto belonging or in anywise appertaining.

TO HAVE AND TO HOLD, the same in fee simple forever.

AND the grantors hereby covenant with said grantees that the grantors are lawfully seized of said land in fee simple; that the grantors have good right and lawful authority to sell and convey said land; that the grantors hereby fully warrant the title to said land and will defend the same against the lawful claims of all persons whomsoever; and that said land is free of all encumbrances, except easements, restrictions and reservations of record, if any, and taxes accruing subsequent to December 31, 2013.

IN WITNESS WHEREOF, grantors have hereunto set grantors' hands and seals the day and year first above written.

Signed, sealed and delivered in our presence:

Witness Name: KEVIN QUINN

Witness Name: Schilleas Varajon S

Collin Priestley

Kristin Priestley

State of Pennsylvania
County of Delaware

The foregoing instrument was acknowledged before me this 6th day of February, 2014 by Collin Priestley and Kristin Priestley, who [✓] are personally known or [ ] have produced a driver's license as identification.

[Notary Seal]

NOTARIAL SEAL
MAYA P ALAM-KHANDKAR
Notary Public
HAVERFORD TWP, DELAWARE CNTY
My Commission Expires Apr 7, 2014

Notary Public

Printed Name: Maya P Alam-khandkar

My Commission Expires: 4/7/2014

CFN 2005111288
Bk 02895 Pg 0357; (1pg)
DATE: 07/20/2005 03:55:21 PM
JAMES C. WATKINS, CLERK OF COURT
LAKE COUNTY
RECORDING FEES 10.00
DEED DOC 777.00

Prepared by and return to:
R. Dewey Burnsed/mls
Attorney at Law
McLin & Burnsed PA
1028 Lake Sumter Landing
The Villages, FL 32162
File No.: PV0742

10
777
787

[Space Above This Line For Recording Data]

Warranty Deed

This Warranty Deed made this **14th** day of **July, 2005** between **Lester K. Wortman, a married man, joined by his wife, Mary L. Wortman**, whose post office address is **5 Gateshead Drive, Apt 212, Dunedin, FL 34698**, grantor, and **Pamela A. Barsness, a single woman**, whose post office address is **22 Summerside Lane, Hyannis, MA 02601** grantee:

(Whenever used herein the terms "grantor" and "grantee" include all the parties to this instrument and the heirs, legal representatives, and assigns of individuals, and the successors and assigns of corporations, trusts and trustees)

WITNESSETH, that said grantor, for and in consideration of the sum of TEN AND NO/100 DOLLARS ($10.00) and other good and valuable considerations to said grantor in hand paid by said grantee, the receipt whereof is hereby acknowledged, has granted, bargained, and sold to the said grantee, and grantee's heirs and assigns forever, the following described land, situate, lying and being in **Lake County Florida** to-wit:

PARCEL ID #: 0618240350-000-19400

Lot 194, Unit 3.1B, Orange Blossom Gardens, according to the plat thereof recorded in Plat Book 25, Pages 33 through 35, Public Records of Lake County, Florida. MK
A 1985 SHORLINE SHERWOOD 48' Manufactured Home, ID No. N12211, Title No. 22934874, and RP No. R198066.

TOGETHER with all the tenements, hereditaments and appurtenances thereto belonging or in anywise appertaining.

TO HAVE AND TO HOLD, the same in fee simple forever.

AND the grantor hereby covenants with said grantee that the grantor is lawfully seized of said land in fee simple; that the grantor has good right and lawful authority to sell and convey said land; that the grantor hereby fully warrants the title to said land and will defend the same against the lawful claims of all persons whomsoever; and that said land is free of all encumbrances, except easements, restrictions and reservations of record, if any, and taxes accruing subsequent to December 31, 2004.

IN WITNESS WHEREOF, grantor has hereunto set grantor's hand and seal the day and year first above written.

Signed, sealed and delivered in our presence:

Witness Name: Tara Popham
Witness Name: A. RENEE FLEISCH

Lester K. Wortman (Seal)
Lester K. Wortman

Mary L. Wortman (Seal)
Mary L. Wortman

State of Florida
County of Pinellas

The foregoing instrument was acknowledged before me this 14th day of July, 2005 by Lester K. Wortman, a married man, joined by his wife, Mary L. Wortman, who [_] is personally known or [X] has produced a driver's license as identification.

[Notary Seal]

MARY K. BROTMAN
Notary Public - State of Florida
My Commission Expires Apr 12, 2009
Commission # DD 418039

Notary Public, State of Florida MK

Printed Name: MARY K. BROTMAN

My Commission Expires: 4/12/09

INSTRUMENT#: 2015135117 OR BK 4717 PG 515 PAGES: 1 12/15/2015 12:37:42 PM
NEIL KELLY, LAKE COUNTY CLERK OF THE CIRCUIT COURT
REC FEES: $10.00 DEED DOC:$399.00

RETURN

Prepared by and return to:
Gary Fuchs/tn
Attorney at Law
McLin Burnsed
1028 Lake Sumter Landing
The Villages, FL 32162
File No.: **P07618**

Rec 10
Doc
Int
Total

[Space Above This Line For Recording Data]

Warranty Deed

This Warranty Deed made this **10th** day of **December, 2015** between **Elizabeth K. Miller, a single woman**, whose post office address is **290 W. Calle Montero, Sahuarita, AZ 85629**, grantor, and **The Villages of Lake-Sumter, Inc., a Florida corporation**, whose post office address is **1020 Lake Sumter Landing, The Villages, FL 32162** grantee:

(Whenever used herein the terms "grantor" and "grantee" include all the parties to this instrument and the heirs, legal representatives, and assigns of individuals, and the successors and assigns of corporations, trusts and trustees)

WITNESSETH, that said grantor, for and in consideration of the sum of TEN AND NO/100 DOLLARS ($10.00) and other good and valuable considerations to said grantor in hand paid by said grantee, the receipt whereof is hereby acknowledged, has granted, bargained, and sold to the said grantee, and grantee's heirs and assigns forever, the following described land, situate, lying and being in **Lake County, Florida** to-wit:

PARCEL ID #: 0618240300-000-11000

Lot 110, Unit 3, Orange Blossom Gardens, according to the plat thereof recorded in Plat Book 23, Pages 27 through 29, Public Records of Lake County, Florida.

Together with a 1985 SHORLINE Manufactured Home, ID# N12227A & # N12227B, Florida Title 41037285 & 41037286 bearing Real Property Decals # R224877 & # R224878 which is an improvement to the land and an immovable fixture, and by intention of the parties and upon retirement of the Certificate of Title as provided in Florida Statutes 319.261, shall constitute a part of the realty and shall pass with it.

TOGETHER with all the tenements, hereditaments and appurtenances thereto belonging or in anywise appertaining.

TO HAVE AND TO HOLD, the same in fee simple forever.

AND the grantor hereby covenants with said grantee that the grantor is lawfully seized of said land in fee simple; that the grantor has good right and lawful authority to sell and convey said land; that the grantor hereby fully warrants the title to said land and will defend the same against the lawful claims of all persons whomsoever; and that said land is free of all encumbrances, except easements, restrictions and reservations of record, if any, and taxes accruing subsequent to December 31, 2015.

IN WITNESS WHEREOF, grantor has hereunto set grantor's hand and seal the day and year first above written.

Signed, sealed and delivered in our presence:

Teresa Norvell
Witness Name: Teresa Norvell

June Brine
Witness Name: June Brine

Elizabeth K. Miller
Elizabeth K. Miller

State of Florida
County of Lake

The foregoing instrument was acknowledged before me this 9th day of December, 2015 by Elizabeth K. Miller, a single woman, who [ ] is personally known or [X] has produced a driver's license as identification.

[Notary Seal]

TERESA NORVELL
MY COMMISSION # FF 130328
EXPIRES: June 8, 2018
Bonded Thru Budget Notary Services

Teresa Norvell
Notary Public

Printed Name:

My Commission Expires:

INSTRUMENT#: 2016012973 OR BK 4737 PG 2162 PAGES: 1 2/5/2016 8:46:58 AM
NEIL KELLY, LAKE COUNTY CLERK OF THE CIRCUIT COURT
REC FEES: $10.00 DEED DOC:$455.00

105000

RETURN

Prepared by and return to:
Gary Fuchs/sss
Attorney at Law
McLin Burnsed
1028 Lake Sumter Landing
The Villages, FL 32162
File No.: **P08192**

Doc Stamp
Rec
Doc
Int
Total

[Space Above This Line For Recording Data]

Warranty Deed

This Warranty Deed made this **27th** day of **January, 2016** between **Luigi Tortu and Theresa Tortu, husband and wife**, whose post office address is **13517 NE 86th Court, Apt 125, Lady Lake, FL 32159**, grantor, and **The Villages of Lake-Sumter, Inc., a Florida corporation**, whose post office address is **1020 Lake Sumter Landing, The Villages, FL 32162** grantee:

(Whenever used herein the terms "grantor" and "grantee" include all the parties to this instrument and the heirs, legal representatives, and assigns of individuals, and the successors and assigns of corporations, trusts and trustees)

WITNESSETH, that said grantor, for and in consideration of the sum of TEN AND NO/100 DOLLARS ($10.00) and other good and valuable considerations to said grantor in hand paid by said grantee, the receipt whereof is hereby acknowledged, has granted, bargained, and sold to the said grantee, and grantee's heirs and assigns forever, the following described land, situate, lying and being in **Lake County, Florida** to-wit:

PARCEL ID #: 0618240300-000-11100

Lot 111, ORANGE BLOSSOM GARDENS UNIT NO. 3, according to the map or plat thereof as recorded in Plat Book 23, Page 27, Public Records of Lake County, Florida.

Together with a 1984 PALM Manufactured Home, ID# 23630124AT & # 23630124BT, Florida Title 20621195 & 22532318 bearing Real Property Decals # R079979 & # R079980 which is an Improvement to the land and an immovable fixture, and by intention of the parties and upon retirement of the Certificate of Title as provided in Florida Statutes 319.261, shall constitute a part of the realty and shall pass with it.

TOGETHER with all the tenements, hereditaments and appurtenances thereto belonging or in anywise appertaining.

TO HAVE AND TO HOLD, the same in fee simple forever.

AND the grantor hereby covenants with said grantee that the grantor is lawfully seized of said land in fee simple; that the grantor has good right and lawful authority to sell and convey said land; that the grantor hereby fully warrants the title to said land and will defend the same against the lawful claims of all persons whomsoever; and that said land is free of all encumbrances, except easements, restrictions and reservations of record, if any, and taxes accruing subsequent to December 31, 2015.

IN WITNESS WHEREOF, grantor has hereunto set grantor's hand and seal the day and year first above written.

Signed, sealed and delivered in our presence:

Witness Name: Rene Webster

Luigi Tortu

Witness Name: Stacy Spears

Theresa Tortu

State of Florida
County of Lake

The foregoing instrument was acknowledged before me this 27th day of January, 2016 by Luigi Tortu and Theresa Tortu, husband and wife, who [_] are personally known or [X] have produced a driver's license as identification.

[Notary Seal]

Notary Public

Printed Name: STACY S. SPEARS

My Commission Expires: MY COMMISSION # FF 072774 EXPIRES: December 26, 2017 Bonded Thru Budget Notary Services

INSTRUMENT#: 2016001224 OR BK 4724 PG 2074 PAGES: 1 1/6/2016 9:58:22 AM
NEIL KELLY, LAKE COUNTY CLERK OF THE CIRCUIT COURT
REC FEES: $10.00 DEED DOC:$504.00

72000 RETURN

Prepared by and return to:
Gary Fuchs/jg
Attorney at Law
McLin Burnsed
1028 Lake Sumter Landing
The Villages, FL 32162
File No.: **P08061**

Ex N
Rec 10
Doc
Int
Total

[Space Above This Line For Recording Data]

Warranty Deed

This Warranty Deed made this **22nd** day of **December, 2015** between **Herman Guenot, a single man**, whose post office address is **11017 SE 174th Lane, Summerfield, FL 34491**, grantor, and **The Villages of Lake-Sumter, Inc., a Florida corporation**, whose post office address is **1020 Lake Sumter Landing, The Villages, FL 32162** grantee:

(Whenever used herein the terms "grantor" and "grantee" include all the parties to this instrument and the heirs, legal representatives, and assigns of individuals, and the successors and assigns of corporations, trusts and trustees)

WITNESSETH, that said grantor, for and in consideration of the sum of TEN AND NO/100 DOLLARS ($10.00) and other good and valuable considerations to said grantor in hand paid by said grantee, the receipt whereof is hereby acknowledged, has granted, bargained, and sold to the said grantee, and grantee's heirs and assigns forever, the following described land, situate, lying and being in **Lake County, Florida** to-wit:

PARCEL ID #: 0618240300-000-13100

Lot 131, Unit 3, Orange Blossom Gardens, according to the plat thereof recorded in Plat Book 23, Pages 27 through 29, Public Records of Lake County, Florida.

Together with the Manufactured Home, bearing VIN # 0261258K thereon. The Titles have been retired.

TOGETHER with all the tenements, hereditaments and appurtenances thereto belonging or in anywise appertaining.

TO HAVE AND TO HOLD, the same in fee simple forever.

AND the grantor hereby covenants with said grantee that the grantor is lawfully seized of said land in fee simple; that the grantor has good right and lawful authority to sell and convey said land; that the grantor hereby fully warrants the title to said land and will defend the same against the lawful claims of all persons whomsoever; and that said land is free of all encumbrances, except easements, restrictions and reservations of record, if any, and taxes accruing subsequent to December 31, 2015.

IN WITNESS WHEREOF, grantor has hereunto set grantor's hand and seal the day and year first above written.

Signed, sealed and delivered in our presence:

Witness Name: Jennifer Grovesteen

Witness Name: JANICE S. SCHOENFELDT

Herman Guenot

State of Florida
County of Lake

The foregoing instrument was acknowledged before me this 22nd day of December, 2015 by Herman Guenot, a single man, who [_] is personally known or [X] has produced a driver's license as identification.

[Notary Seal]

JENNIFER GROVESTEEN
MY COMMISSION # FF 907224
EXPIRES: December 5, 2019
Bonded Thru Budget Notary Services

Notary Public

Printed Name: Jennifer Grovesteen

My Commission Expires: 12/5/2019

SCALE: 1/16"=1'

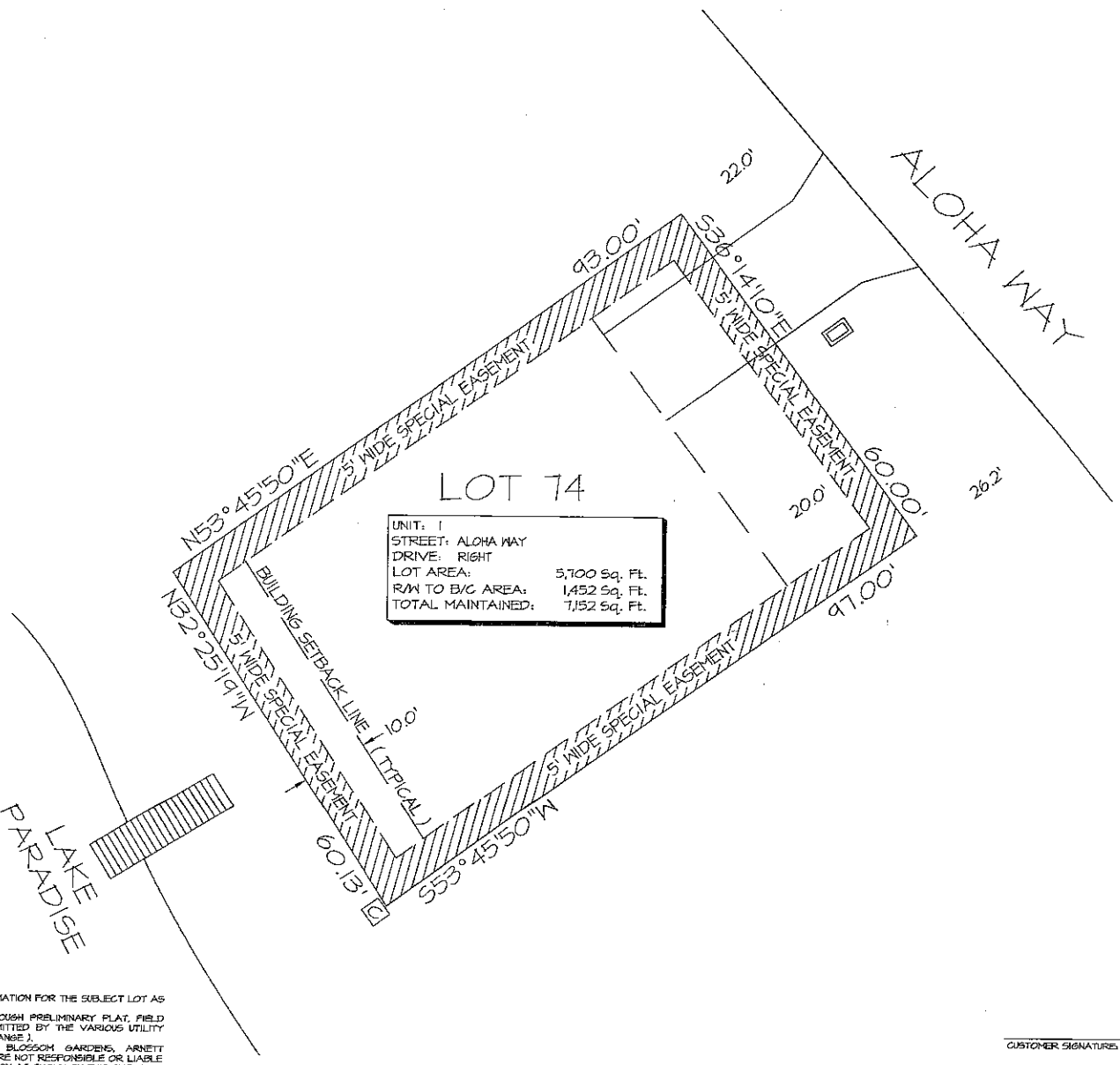

LEGEND

- WATER METER
- IRRIGATION METER
- STREET LIGHT
- (P) INDICATES PLAT
- (M) INDICATES MEASURED
- CABLE T.V. PEDESTAL / 7" OR 9" ROUND
- TELEPHONE PEDESTAL / 4" OR 12" ROUND
- ELECTRIC PEDESTAL / 20"X20" PAD
- ELECTRIC TRANSFORMER / 3'X3' PAD
- ELECTRIC FEED THROUGH CABINET
- UTILITY VAULT
- WATER VALVE
- FIRE HYDRANT
- STORM INLET
- VALLEY GUTTER INLET
- CATCH BASIN
- MANHOLE
- LINE EXTENDER PEDESTAL / 12"X30"X14"
- TRUNK-AMP PEDESTAL / 17"X30"X14"
- SWITCH GEAR / 7' X 7'
- POWER SUPPLY / 20"x28"x38"
- BOARD / STOCKADE / PVC FENCE

NOTE: EASEMENTS AND RIGHT OF WAYS IN FAVOR OF THE DEVELOPER ARE HEREBY RESERVED FOR THE CONSTRUCTION, INSTALLATION AND MAINTENANCE OF UTILITIES SUCH AS ELECTRIC LIGHT LINES, SANITARY, SEWER, STORM DRAINAGE, WATER LINES, CABLEVISION TELEPHONE, RECREATION FACILITIES AND TELEGRAPH LINES OR THE LIKE. THESE THIRD PARTY UTILITY PROVIDERS UTILIZING SUCH EASEMENT AREA COVENANT, AS A CONDITION OF THE RIGHT TO USE SUCH EASEMENT, NOT TO INTERFERE OR DISTURB SUCH EQUIPMENT INSTALLED WITHIN THE EASEMENT AREA. ALL UTILITY PROVIDERS ARE RESPONSIBLE FOR REPAIRING THE GRADING AND LANDSCAPE BEING DISTURBED PURSUANT TO ANY UTILIZATION OF SUCH EASEMENTS. HOWEVER, THESE UTILITY PROVIDERS MAY USE ABOVE GROUND JUNCTION BOXES, PEDESTALS, SPLICE BOXES AND ETC. FOR THEIR UTILITIES AND THE DEVELOPER IS WITHOUT KNOWLEDGE AS TO THE SPECIFIC LOCATION WITHIN THE EASEMENTS AND RIGHT OF WAYS THAT THESE UTILITY PROVIDERS MAY PLACE THESE ABOVE GROUND ITEMS IN THE FUTURE.

THIS IS NOT A SURVEY

THIS SKETCH IS INTENDED TO SHOW PERTINENT INFORMATION FOR THE SUBJECT LOT AS SHOWN HEREON.
THE INFORMATION SHOWN HAS BEEN OBTAINED THROUGH PRELIMINARY PLAT, FIELD MEASUREMENTS AND CONSTRUCTION PLANS AS SUBMITTED BY THE VARIOUS UTILITY COMPANIES (UTILITY LOCATIONS ARE SUBJECT TO CHANGE).
THE VILLAGES OF LAKE-SUMTER, INC. ORANGE BLOSSOM GARDENS, ARNETT ENVIRONMENTAL AND/OR ANY AFFILIATES THEREOF ARE NOT RESPONSIBLE OR LIABLE FOR ACCURACY OR CORRECTNESS OF THE INFORMATION AS SHOWN ON THIS SKETCH.

CUSTOMER SIGNATURE: _____ DATE: _____

CUSTOMER SIGNATURE: _____ DATE: _____

The Villages

Arnett Environmental, LLC
1024 Lake Sumter Landing The Villages, FL 32162
Tel No. (352)753-4747 Fax No. (352)753-4258
Certificate of Authorization Number: 27495

SCALE: 1/16"=1'

LAKE PARADISE

N50°51'35"E (M)
42.07' (M)
N51°00'00"E (P)
42.00' (P)

5' WIDE SPECIAL EASEMENT

BUILDING SETBACK LINE (TYPICAL)

10.0'

S59°51'47"E
S59°52'10"E

5' WIDE SPECIAL EASEMENT

1' WIDE
5' HIGH
HEDGE ROW

CI
ARC=18.21' (P)
ARC=18.29' (M)

93.20' (M)
92.81' (P)

LOT 194*

UNIT:	3,18
STREET:	ALOHA WAY
DRIVE:	RIGHT
LOT AREA:	5,329 Sq. Ft.
R/W TO B/C AREA:	989 Sq. Ft.
TOTAL MAINTAINED:	6,318 Sq. Ft.

N39°00'00"W
N39°00'00"W

5' WIDE SPECIAL EASEMENT

90.00' (P)
90.01' (M)

5' WIDE SPECIAL EASEMENT

57.25' (P)
57.38 (M)

CI

30" PALM

36" CAMPHOR

S51°00'00"W
S51°18'06"W

ALOHA WAY

LEGEND :

- WATER METER
- IRRIGATION METER
- STREET LIGHT
- (P) INDICATES PLAT
- (M) INDICATES MEASURED
- CABLE T.V. PEDESTAL / 7" OR 9" ROUND
- TELEPHONE PEDESTAL / 4" OR 12" ROUND
- ELECTRIC PEDESTAL / 20"X20" PAD
- ELECTRIC TRANSFORMER / 5'X3' PAD
- ELECTRIC FEED THROUGH CABINET
- UTILITY VAULT
- WATER VALVE
- FIRE HYDRANT
- STORM INLET
- VALLEY GUTTER INLET
- CATCH BASIN
- MANHOLE
- LINE EXTENDER PEDESTAL / 12"X30"X14"
- TRUNK-AMP PEDESTAL / 17"X30"X14"
- SWITCH GEAR / 7' X 7'
- POWER SUPPLY / 20"x28"x38"
- BOARD / STOCKADE / PVC FENCE

NOTE: EASEMENTS AND RIGHT OF WAYS IN FAVOR OF THE DEVELOPER ARE HEREBY RESERVED FOR THE CONSTRUCTION, INSTALLATION AND MAINTENANCE OF UTILITIES SUCH AS ELECTRIC LIGHT LINES, SANITARY, SEWER, STORM DRAINAGE, WATER LINES, CABLEVISION TELEPHONE, RECREATION FACILITIES AND TELEGRAPH LINES OR THE LIKE. THESE THIRD PARTY UTILITY PROVIDERS UTILIZING SUCH EASEMENT AREA COVENANT, AS A CONDITION OF THE RIGHT TO USE SUCH EASEMENT, NOT TO INTERFERE OR DISTURB SUCH EQUIPMENT INSTALLED WITHIN THE EASEMENT AREA. ALL UTILITY PROVIDERS ARE RESPONSIBLE FOR REPAIRING THE GRADING AND LANDSCAPE BEING DISTURBED PURSUANT TO ANY UTILIZATION OF SUCH EASEMENTS. HOWEVER, THESE UTILITY PROVIDERS MAY USE ABOVE GROUND JUNCTION BOXES, PEDESTALS, SPLICE BOXES AND ETC. FOR THEIR UTILITIES AND THE DEVELOPER IS WITHOUT KNOWLEDGE AS TO THE SPECIFIC LOCATION WITHIN THE EASEMENTS AND RIGHT OF WAYS THAT THESE UTILITY PROVIDERS MAY PLACE THESE ABOVE GROUND ITEMS IN THE FUTURE.

* SPECIAL FLOOR PLAN HOME SITE

THIS IS NOT A SURVEY

THIS SKETCH IS INTENDED TO SHOW PERTINENT INFORMATION FOR THE SUBJECT LOT AS SHOWN HEREON.
THE INFORMATION SHOWN HAS BEEN OBTAINED THROUGH PRELIMINARY PLAT, FIELD MEASUREMENTS AND CONSTRUCTION PLANS AS SUBMITTED BY THE VARIOUS UTILITY COMPANIES (UTILITY LOCATIONS ARE SUBJECT TO CHANGE).
THE VILLAGES OF LAKE-SUMTER, INC. ORANGE BLOSSOM GARDENS, ARNETT ENVIRONMENTAL AND/OR ANY AFFILIATES THEREOF ARE NOT RESPONSIBLE OR LIABLE FOR ACCURACY OR CORRECTNESS OF THE INFORMATION AS SHOWN ON THIS SKETCH.

CUSTOMER SIGNATURE: _____ DATE: _____

CUSTOMER SIGNATURE: _____ DATE: _____

The Villages

Arnett Environmental, LLC
1038 Lake Sumter Landing The Villages, FL 32162
Tel No. (352)753-1747 Fax No. (352)753-1289
Certificate of Authorization Number: 27985

SCALE: 1/16"=1'

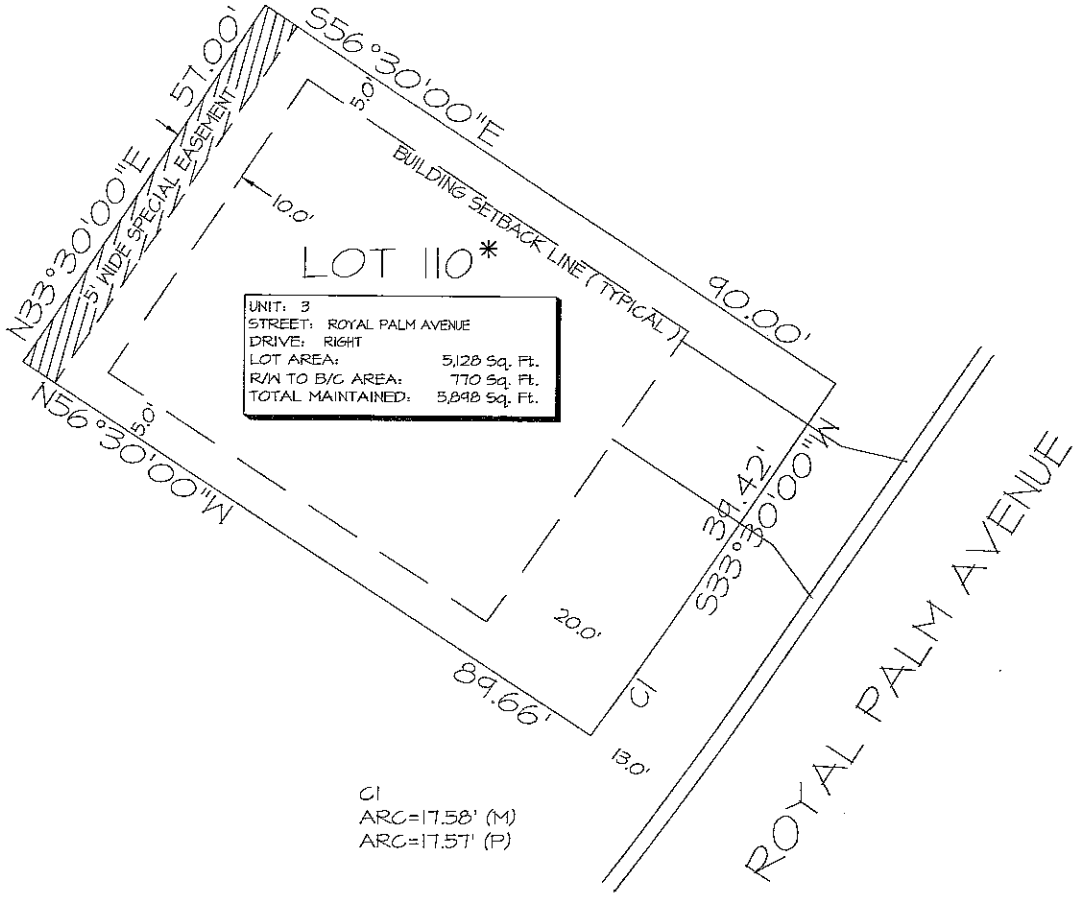

UNIT:	3
STREET:	ROYAL PALM AVENUE
DRIVE:	RIGHT
LOT AREA:	5,128 Sq. Ft.
R/W TO B/C AREA:	770 Sq. Ft.
TOTAL MAINTAINED:	5,898 Sq. Ft.

C1
ARC=17.58' (M)
ARC=17.57' (P)

LEGEND :

- WATER METER
- IRRIGATION METER
- STREET LIGHT
- (P) INDICATES PLAT
- (M) INDICATES MEASURED
- CABLE T.V. PEDESTAL / 7" OR 9" ROUND
- TELEPHONE PEDESTAL / 4" OR 12" ROUND
- ELECTRIC PEDESTAL / 20"X20" PAD
- ELECTRIC TRANSFORMER / 3'X3' PAD
- ELECTRIC FEED THROUGH CABINET
- UTILITY VAULT
- WATER VALVE
- FIRE HYDRANT
- STORM INLET
- VALLEY GUTTER INLET
- CATCH BASIN
- MANHOLE
- LINE EXTENDER PEDESTAL / 12"X30"X14"
- TRUNK-AMP PEDESTAL / 17"X30"X14"
- SWITCH GEAR / 7' X 7'
- POWER SUPPLY / 20"X28"X58"
- BOARD / STOCKADE / PVC FENCE

NOTE: EASEMENTS AND RIGHT OF WAYS IN FAVOR OF THE DEVELOPER ARE HEREBY RESERVED FOR THE CONSTRUCTION, INSTALLATION AND MAINTENANCE OF UTILITIES SUCH AS ELECTRIC LIGHT LINES, SANITARY, SEWER, STORM DRAINAGE, WATER LINES, CABLEVISION TELEPHONE, RECREATION FACILITIES AND TELEGRAPH LINES OR THE LIKE. THESE THIRD PARTY UTILITY PROVIDERS UTILIZING SUCH EASEMENT AREA COVENANT, AS A CONDITION OF THE RIGHT TO USE SUCH EASEMENT, NOT TO INTERFERE OR DISTURB SUCH EQUIPMENT INSTALLED WITHIN THE EASEMENT AREA. ALL UTILITY PROVIDERS ARE RESPONSIBLE FOR REPAIRING THE GRADING AND LANDSCAPE BEING DISTURBED PURSUANT TO ANY UTILIZATION OF SUCH EASEMENTS. HOWEVER, THESE UTILITY PROVIDERS MAY USE ABOVE GROUND JUNCTION BOXES, PEDESTALS, SPLICE BOXES AND ETC. FOR THEIR UTILITIES AND THE DEVELOPER IS WITHOUT KNOWLEDGE AS TO THE SPECIFIC LOCATION WITHIN THE EASEMENTS AND RIGHT OF WAYS THAT THESE UTILITY PROVIDERS MAY PLACE THESE ABOVE GROUND ITEMS IN THE FUTURE.

* SPECIAL FLOOR PLAN HOME SITE

THIS IS NOT A SURVEY

THIS SKETCH IS INTENDED TO SHOW PERTINENT INFORMATION FOR THE SUBJECT LOT AS SHOWN HEREON.
THE INFORMATION SHOWN HAS BEEN OBTAINED THROUGH PRELIMINARY PLAT, FIELD MEASUREMENTS AND CONSTRUCTION PLANS AS SUBMITTED BY THE VARIOUS UTILITY COMPANIES (UTILITY LOCATIONS ARE SUBJECT TO CHANGE).
THE VILLAGES OF LAKE-SUMTER, INC. ORANGE BLOSSOM GARDENS, ARNETT ENVIRONMENTAL AND/OR ANY AFFILIATES THEREOF ARE NOT RESPONSIBLE OR LIABLE FOR ACCURACY OR CORRECTNESS OF THE INFORMATION AS SHOWN ON THIS SKETCH.

CUSTOMER SIGNATURE: _____ DATE: _____

CUSTOMER SIGNATURE: _____ DATE: _____

The Villages

Arnett Environmental, LLC
1938 Lake Sumter Landing The Villages, FL 32162
Tel No. (352)753-4747 Fax No. (352)753-1299
Certificate of Authorization Number: 27-HS

SCALE: 1/16"=1'

L1=N45°28'17"E, 25.44'
L2=N33°30'00"E, 33.41'

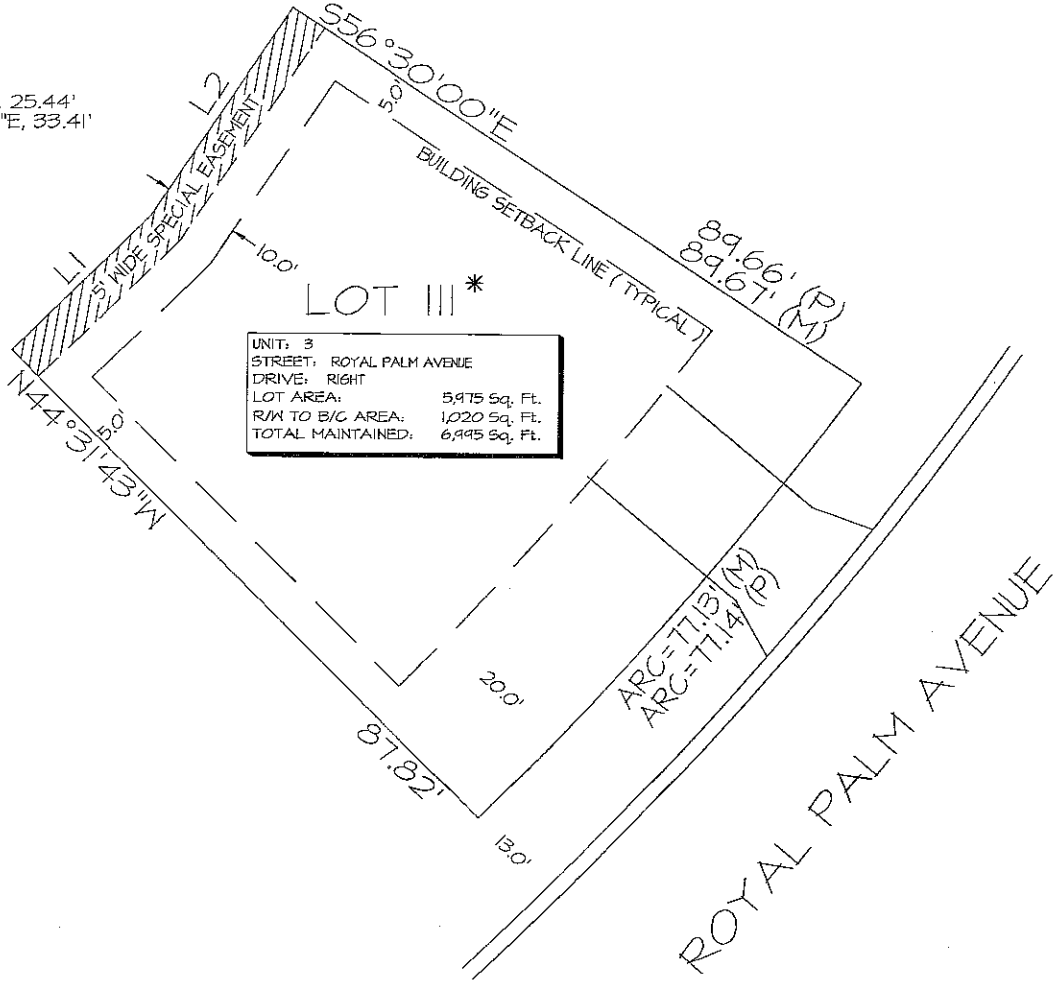

LEGEND :

- WATER METER
- IRRIGATION METER
- STREET LIGHT
- (P) INDICATES PLAT
- (M) INDICATES MEASURED
- CABLE T.V. PEDESTAL / 7" OR 9" ROUND
- TELEPHONE PEDESTAL / 4" OR 12" ROUND
- ELECTRIC PEDESTAL / 20"X20" PAD
- ELECTRIC TRANSFORMER / 3'X3' PAD
- ELECTRIC FEED THROUGH CABINET
- UTILITY VAULT
- WATER VALVE
- FIRE HYDRANT
- STORM INLET
- VALLEY GUTTER INLET
- CATCH BASIN
- MANHOLE
- LINE EXTENDER PEDESTAL / 12"X30"X14"
- TRUNK-AMP PEDESTAL / 17"X30"X14"
- SWITCH GEAR / 7' X 7'
- POWER SUPPLY / 20"X28"X58"
- BOARD / STOCKADE / PVC FENCE

NOTE: EASEMENTS AND RIGHT OF WAYS IN FAVOR OF THE DEVELOPER ARE HEREBY RESERVED FOR THE CONSTRUCTION, INSTALLATION, AND MAINTENANCE OF UTILITIES SUCH AS ELECTRIC LIGHT LINES, SANITARY, SEWER, STORM DRAINAGE, WATER LINES, CABLEVISION - TELEPHONE, RECREATION FACILITIES AND TELEGRAPH LINES OR THE LIKE. THESE THIRD PARTY UTILITY PROVIDERS UTILIZING SUCH EASEMENT AREA COVENANT, AS A CONDITION OF THE RIGHT TO USE SUCH EASEMENT, NOT TO INTERFERE OR DISTURB SUCH EQUIPMENT INSTALLED WITHIN THE EASEMENT AREA. ALL UTILITY PROVIDERS ARE RESPONSIBLE FOR REPAIRING THE GRADING AND LANDSCAPE BEING DISTURBED PURSUANT TO ANY UTILIZATION OF SUCH EASEMENTS. HOWEVER, THESE UTILITY PROVIDERS MAY USE ABOVE GROUND JUNCTION BOXES, PEDESTALS, SPLICE BOXES AND ETC. FOR THEIR UTILITIES AND THE DEVELOPER IS WITHOUT KNOWLEDGE AS TO THE SPECIFIC LOCATION WITHIN THE EASEMENTS AND RIGHT OF WAYS THAT THESE UTILITY PROVIDERS MAY PLACE THESE ABOVE GROUND ITEMS IN THE FUTURE.

* SPECIAL FLOOR PLAN HOME SITE

THIS IS NOT A SURVEY

THIS SKETCH IS INTENDED TO SHOW PERTINENT INFORMATION FOR THE SUBJECT LOT AS SHOWN HEREON.
THE INFORMATION SHOWN HAS BEEN OBTAINED THROUGH PRELIMINARY PLAT, FIELD MEASUREMENTS AND CONSTRUCTION PLANS AS SUBMITTED BY THE VARIOUS UTILITY COMPANIES (UTILITY LOCATIONS ARE SUBJECT TO CHANGE).
THE VILLAGES OF LAKE-SUMTER, INC., ORANGE BLOSSOM GARDENS, ARNETT ENVIRONMENTAL AND/OR ANY AFFILIATES THEREOF ARE NOT RESPONSIBLE OR LIABLE FOR ACCURACY OR CORRECTNESS OF THE INFORMATION AS SHOWN ON THIS SKETCH.

CUSTOMER SIGNATURE: _____ DATE: _____

CUSTOMER SIGNATURE: _____ DATE: _____

The Villages

Arnett Environmental, LLC
1038 Lake Sumter Landing The Villages, FL 32162
Tel No. (352)753-4747 Fax No. (352)753-1296
Certificate of Authorization Number: 27485

SCALE: 1/16"=1'

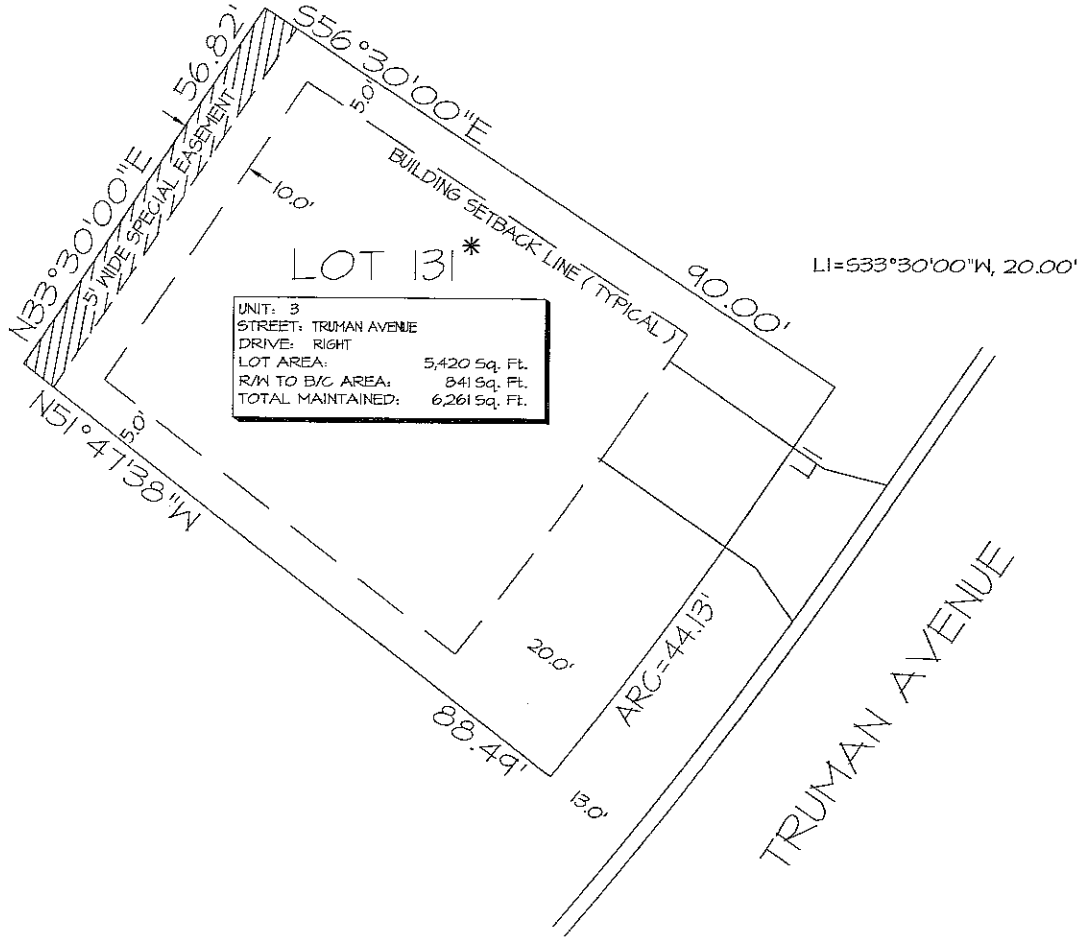

UNIT: 3
STREET: TRUMAN AVENUE
DRIVE: RIGHT

LOT AREA:	5,420 Sq. Ft.
R/W TO B/C AREA:	841 Sq. Ft.
TOTAL MAINTAINED:	6,261 Sq. Ft.

LEGEND :

- WATER METER
- IRRIGATION METER
- STREET LIGHT
- (P) INDICATES PLAT
- (M) INDICATES MEASURED
- CABLE T.V. PEDESTAL / 7" OR 9" ROUND
- TELEPHONE PEDESTAL / 4" OR 12" ROUND
- ELECTRIC PEDESTAL / 20"X20" PAD
- ELECTRIC TRANSFORMER / 5'X8' PAD
- ELECTRIC FEED THROUGH CABINET
- UTILITY VAULT
- WATER VALVE
- FIRE HYDRANT
- STORM INLET
- VALLEY GUTTER INLET
- CATCH BASIN
- MANHOLE
- LINE EXTENDER PEDESTAL / 12"X30"X14"
- TRUNK-AMP PEDESTAL / 17"X30"X14"
- SWITCH GEAR / 7' X 7'
- POWER SUPPLY / 20"x28"x58"
- BOARD / STOCKADE / PVC FENCE

NOTE: EASEMENTS AND RIGHT OF WAYS IN FAVOR OF THE DEVELOPER ARE HEREBY RESERVED FOR THE CONSTRUCTION, INSTALLATION AND MAINTENANCE OF UTILITIES SUCH AS ELECTRIC LIGHT LINES, SANITARY, SEWER, STORM DRAINAGE, WATER LINES, CABLEVISION TELEPHONE, RECREATION FACILITIES AND TELEGRAPH LINES OR THE LIKE. THESE THIRD PARTY UTILITY PROVIDERS UTILIZING SUCH EASEMENT AREA COVENANT, AS A CONDITION OF THE RIGHT TO USE SUCH EASEMENT, NOT TO INTERFERE OR DISTURB SUCH EQUIPMENT INSTALLED WITHIN THE EASEMENT AREA. ALL UTILITY PROVIDERS ARE RESPONSIBLE FOR REPAIRING THE GRADING AND LANDSCAPE BEING DISTURBED PURSUANT TO ANY UTILIZATION OF SUCH EASEMENTS. HOWEVER, THESE UTILITY PROVIDERS MAY USE ABOVE GROUND JUNCTION BOXES, PEDESTALS, SPLICE BOXES AND ETC. FOR THEIR UTILITIES AND THE DEVELOPER IS WITHOUT KNOWLEDGE AS TO THE SPECIFIC LOCATION WITHIN THE EASEMENTS AND RIGHT OF WAYS THAT THESE UTILITY PROVIDERS MAY PLACE THESE ABOVE GROUND ITEMS IN THE FUTURE.

* SPECIAL FLOOR PLAN HOME SITE

THIS IS NOT A SURVEY

THIS SKETCH IS INTENDED TO SHOW PERTINENT INFORMATION FOR THE SUBJECT LOT AS SHOWN HEREON.
THE INFORMATION SHOWN HAS BEEN OBTAINED THROUGH PRELIMINARY PLAT, FIELD MEASUREMENTS AND CONSTRUCTION PLANS AS SUBMITTED BY THE VARIOUS UTILITY COMPANIES (UTILITY LOCATIONS ARE SUBJECT TO CHANGE).
THE VILLAGES OF LAKE-SUMTER, INC., ORANGE BLOSSOM GARDENS, ARNETT ENVIRON-ENTAL AND/OR ANY AFFILIATES THEREOF ARE NOT RESPONSIBLE OR LIABLE FOR ACCURACY OR CORRECTNESS OF THE INFORMATION AS SHOWN ON THIS SKETCH.

CUSTOMER SIGNATURE: DATE:

CUSTOMER SIGNATURE: DATE:

The Villages

Arnett Environmental, LLC
1906 Lake Sumter Landing The Villages, FL 32162
Tel No. (352)753-4747 Fax No. (352)753-1299
Certificate of Authorization Number: 27445

List No.	UNIT	LOT	HOUSE NO.	ADDRESS	ALT KEY NO.	PLAT BOOK/PAGE
1	OBG1	74		1026 Aloha Way	1482461	18/9
2	OBG3-1B	194		803 Aloha Way	2717963	25/33
3	OBG3	110		815 Royal Palm Avenue	2717831	23/27-29
4	OBG3	111		817 Royal Palm Avenue	2665947	23/27-29
5	OBG3	131		811 Truman Avenue	1483921	23/27-29

February 29, 2016

Thad Carroll
Growth Management Director
Town of Lady Lake
409 Fennell Blvd.
Lady Lake, Florida 32159

Re: Orange Blossom Gardens
Annexation, Small Scale Comprehensive Plan Amendment and Rezoning

Dear Mr. Carroll:

Pursuant to the Interlocal Agreement between Lake County and the Town of Lady Lake effective June 24, 2015 (attached hereto), please accept this letter, the $2500 check, 10 copies and one CD of the applications, documents and maps as The Villages of Lake-Sumter, Inc.'s, John and Patricia Porto's and Pamela A. Barsness's request for Annexation, Small Scale Comprehensive Plan Amendment and Rezoning of certain lots in the County Enclave of Orange Blossom Gardens.

Please place this request on the April 11, 2016 Planning and Zoning Board Agenda. We also request that the Land Planning Agency and Town Commission act on the recommendation of the Planning & Zoning Board at their May 2, 2016 Meetings and Commission for Final Reading on May 16, 2016.

Thank you for your cooperation and assistance. Should you require any additional information or have any questions, please feel free to contact me.

Sincerely,

Martin L. Dzuro, V.P.
The Villages of Lake-Sumter, Inc.
Dzuro & Associates
Land Development Consultants-Surveyors
1045 Lake Sumter Landing
The Villages, Florida 32162
(352) 753-6262
marty.dzuro@thevillages.com

INTERLOCAL AGREEMENT BETWEEN
LAKE COUNTY, FLORIDA AND
THE TOWN OF TOWN OF LADY LAKE REGARDING
BUILDING PERMITS AND INSPECTIONS
FOR THE VILLAGES

THIS IS AN INTERLOCAL AGREEMENT by and between Lake County, Florida, a political subdivision of the State of Florida, hereinafter referred to as the "County," and the Town of Lady Lake, a municipal corporation organized under the laws of the State of Florida, hereinafter referred to as the "Town," regarding the issuance of building permits and inspections for privately owned property.

WHEREAS, the Town and County desire to provide for the most efficient planning and building inspection processes for both entities; and

WHEREAS, The Villages either has, or intends to, purchase lots located in an older section of The Villages East of US 27, or either has, or intends to, enter into agreements with existing property owners, to replace existing mobile homes with new, conventionally built homes; and

WHEREAS, the properties subject to this Agreement shall be located within the boundaries of the Interlocal Service Boundary Agreement (ISBA) between Lake County and the Town of Lady Lake, executed on August 27, 2013; and

WHEREAS, Section 163.01, Florida Statutes, known as the "Florida Interlocal Cooperation Act of 1969" authorizes local governments to make the most efficient use of their powers by enabling them to cooperate with each other and to provide services in a manner that will accord best with economic and other factors; and

WHEREAS, the Town desires to issue the building permits on the lots either owned by, or under contract with, The Villages as it would be the in the best interests of the citizens of Lake County, Florida.

NOW, THEREFORE, in consideration of the mutual terms and conditions understandings, conditions, premises, and covenants hereinafter set forth, and intending to be legally bound, the parties hereby agree as follows:

1. **Recitals.** The foregoing recitals are true and correct and incorporated herein by reference.

2. **Town Responsibilities.** The Town agrees as follows:

A. To ensure that The Villages, or the owner under contract with The Villages, has applied for annexation of such property into the Town of Lady Lake. This is a condition precedent and must be satisfied before the Town has authority to issue any building permits for any property located within the unincorporated area.

B. To ensure that the improvements constructed on each property is designed in a way that complies with the Town's Code and Land Development Regulations, and Comprehensive Plan Policies, including any architectural design criteria.

C. To ensure that The Villages obtains any necessary Town zoning and planning approvals or development orders, other than building permits, if necessary. The Villages, or property owner, shall pay the Town any required annexation application and permitting fees, and pay to the County impact fees at the current County rates.

D. The Town Building Department is hereby designated by the parties as the appropriate agency to review building construction plans, to issue building permits, and to conduct necessary building and fire inspections for the properties identified herein located within the unincorporated County. The Town shall provide to the County, upon request of County, any necessary information regarding the project, including inspection and permit status, and shall make all sites available to the County for inspection as needed.

E. The Town will diligently process the annexation application and any other applications for comprehensive plan amendments and zoning requests as required by Florida law and the Town's Ordinances and Land Development Regulations.

3. **County Responsibilities.** Pursuant to Section 4.a. of the ISBA, the County hereby acknowledges and agrees that the Town's Code and Land Development Regulations will be applicable to properties subject to this Agreement. The County agrees to allow the Town to issue any necessary building permits, and perform any necessary building inspections on properties either owned by The Villages, or under contract with the Villages, that is located in the unincorporated area of Lake County. Such properties must be located within the area defined in the Lady Lake ISBA, and the property owner shall have applied for annexation into the Town of Lady Lake prior to the issuance of any building permits.

4. **Term of Agreement.** This Agreement shall become effective on the date upon which the agreement is executed by the last party hereto. This Agreement shall remain in force

until terminated by either of the parties. Either party to this Agreement may terminate the Agreement by providing ninety (90) days written notice to the other.

IN WITNESS WHEREOF, the parties hereto have made and executed this Interlocal Agreement on the respective dates under each signature: Lake County, through its Board of County Commissioners, signing through its Chairman, authorized to execute the same by Board action on the 23rd day of June, 2015, and by the Town of Lady Lake, signing by and through its authorized representative.

ATTEST:

Town Clerk

TOWN OF LADY LAKE

Ruth Kussard

Print Name: RUTH KUSSARD, MAYOR

Date: MAY 18, 2015

Approved as to Form and Legality:

Town Attorney

COUNTY

LAKE COUNTY, through its
BOARD OF COUNTY COMMISSIONERS

ATTEST:

Neil Kelly, Clerk of the Board
of County Commissioners
of Lake County, Florida

Jimmy Conner
Chairman

This 24th day of June, 2015.

Approved as to form and legality:

Sanford A. Minkoff
County Attorney

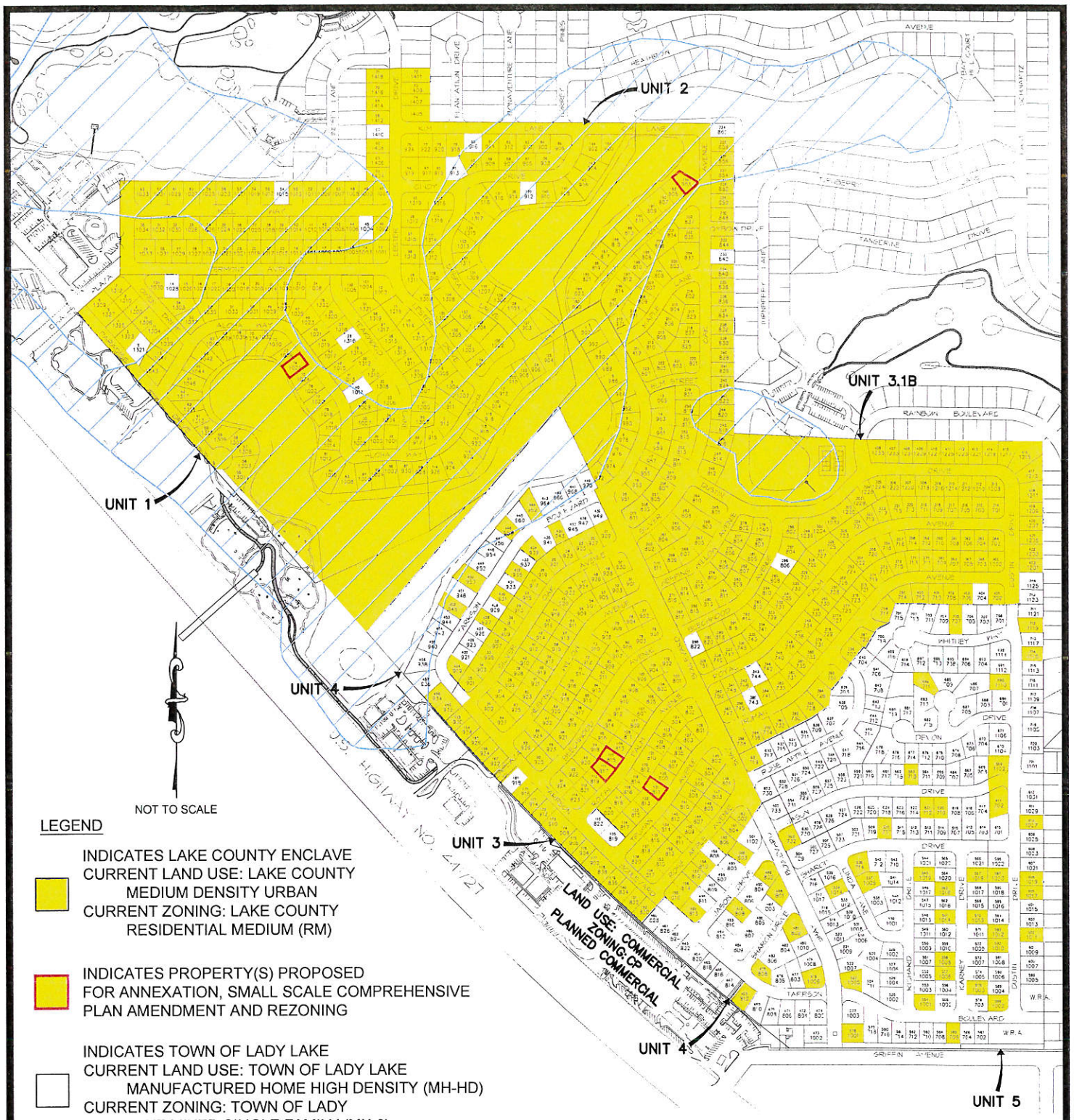

LEGEND

INDICATES LAKE COUNTY ENCLAVE
CURRENT LAND USE: LAKE COUNTY
MEDIUM DENSITY URBAN
CURRENT ZONING: LAKE COUNTY
RESIDENTIAL MEDIUM (RM)

INDICATES PROPERTY(S) PROPOSED
FOR ANNEXATION, SMALL SCALE COMPREHENSIVE
PLAN AMENDMENT AND REZONING

INDICATES TOWN OF LADY LAKE
CURRENT LAND USE: TOWN OF LADY LAKE
MANUFACTURED HOME HIGH DENSITY (MH-HD)
CURRENT ZONING: TOWN OF LADY
LAKE MIXED SINGLE FAMILY (MX-8)

FLOOD ZONE
MAP# 12069C0154E
PANEL 154 OF 750 (REVISED 12-18-12)

10 —— LOT NUMBER
100 —— 911 NUMBER

PROPOSED
ORANGE BLOSSOM GARDENS PROPERTIES
FOR
ANNEXATION, SMALL SCALE COMPREHENSIVE PLAN AMENDMENT AND REZONING

FEBRUARY 29, 2016

Arnett
Environmental, LLC
1038 Lake Sumter Landing The Villages, FL 32162
Tel No. (352)753-4747 Fax No. (352)753-1296
Certificate of Authorization Number: 27495

ANNEXATION
REZONING
1026

ANNEXATION
REZONING

ANNEXATION
RETAINING

ANNEXATION

ANNEXATION
REZONING
RECYCLE · LAKE COUNTY

TOWN COMMISSION AGENDA ITEM

REQUESTED COMMISSION MEETING DATE: MAY 2, 2016 – First Reading

---

SUBJECT: **Ordinance 2016-11 – Annexation of Property Being 0.64 +/- Acres of Land Owned by the Villages of Lake-Sumter, Inc., John and Patricia Porto, and Pamela A. Barsness, referenced by Alternate Keys 1482461, 2717963, 2717831, 2665947, 1483921; 5 Lots, Which Are Located Within Orange Blossom Gardens Units 1, 3, And 3.1b**

DEPARTMENT: **GROWTH MANAGEMENT**

STAFF RECOMMENDED MOTIONS:

Staff Recommends approval of Ordinance 2016-11- The Villages of Lake-Sumter, Inc. John and Patricia Porto, And Pamela A. Barsness – Requesting Annexation of 5 lots consisting of approximately 0.64 +/- acres of land which are located within Orange Blossom Gardens Units 1, 3, and 3.1B within Lake County, Florida.

Applicant, Martin L. Dzuro, on behalf of the Villages of Lake-Sumter, Inc., John and Patricia Porto, and Pamela A. Barsness, has filed applications to annex properties consisting of 5 Lots located north of Griffin Avenue and northeast of North Highway 27/441 within the Orange Blossom Garden Subdivisions Units 1, 3, and 3.1B. The annexation application involves 0.64 +/- acres of property from unincorporated Lake County into the Town of Lady Lake.

The 5 lots are spread out along different roads and include the following addresses:

- 1026 Aloha Way
- 803 Aloha Way
- 811 Truman Avenue
- 815 Royal Palm Avenue
- 817 Royal Palm Avenue

The subject properties lie in Section 06, Township 18 South, Range 24 East, in Lake County, Florida. Appropriate legal descriptions, a location map, and a sketch of the property have been included with the submitted application. All lots will be served by the Village Center Community Development District Central Water and Sewer System, as well as the District's Fire Department.

In accordance with the provisions of Florida Statute 171.205, and the Interlocal Service Boundary Agreement executed September 4, 2013 between Lake County,

Florida and the Town of Lady Lake, Florida, the Town may annex property into the Town which are non-contiguous to the existing municipal boundary. The proposed properties under this application exist as non-contiguous lots.

The annexation application was received on Monday, February 29, 2016, and has been reviewed and determined to be complete satisfying the necessary criteria as required for annexation under statutory requirements. The application was found to meet the requirements of the Land Development Regulations (LDRs) as well as the adopted Comprehensive Plan, and is ready for transmittal to the Town Commission.

Notices to inform the surrounding property owners (70) within 150 feet of the properties proposed by annexation request were mailed Thursday, March 24, 2016. The properties were also posted Thursday, March 24, 2016.

Past Actions:

The **Technical Review Committee (TRC)** members individually reviewed application for Ordinance 2016-11, and determined the application to be complete and ready for transmittal to the P&Z Board.

At the April 11, 2016 meeting, the **Planning and Zoning Board** recommended approval of Ordinance 2016-11 by a vote of 3-0.

Public Hearings

The **Town Commission** is scheduled to consider Ordinance 2016-11 for second and final reading on Monday, May 16, 2016 at 6:00 p.m.

FISCAL IMPACT: $ TBD – pending value of future homes

[ ] Capital Budget **[ ] Operating** **[ ] Other**

ATTACHMENTS: **[X] Ordinance(s)** **[ ] Resolution** **[ ] Budget Resolution**

[ ] Other

[ ] Support Documents/Contracts Available for Review in Manager's Office

4/25/16

DEPARTMENT HEAD	Submitted 4/25/16	Date
FINANCE DEPARTMENT	Approved as to Budget Requirements	Date
TOWN ATTORNEY	Approved as to Form and Legality	Date
TOWN MANAGER	Approved Agenda Item for: 5/2/16	Date 4/26/16

BOARD ACTION: **[✓] Approved as Recommended** **[ ] Disapproved**

HANY/HOL 5-0

CC: THAD-G.M.

[ ] Tabled Indefinitely [ ] Continued to Date Certain

[ ] Approved with Modifications

~~Commissioner Hannan asked if the Town could break the lease at any time.~~

~~Ms. Kollgaard replied that it can break the lease with notice. She stated that the current ten-year lease also has a review period every five years.~~

~~Commissioner Richards confirmed that the funds for the design engineering will come out of the contingency fund.~~

~~***Upon a motion by Commissioner Holden and a second by Commissioner Richards, the Commission approved the Terms Proposed to Partner with the Lady Lake Driving Range on the Parking Lot Project by a vote of 5 to 0.***~~

~~***Upon a motion by Commissioner Holden and a second by Commissioner Vincent, the Commission approved to have the Engineering Design Services completed by Neel-Schaffer in the amount of $13,535.00 for the paving of the Driving Range parking lot by a vote of 5 to 0.***~~

L. TOWN ATTORNEY'S REPORT:

7. Ordinance No. 2016-11 – First Reading – Annexation – The Villages of Lake-Sumter, Inc., John and Patricia Porto, and Pamela A. Barsness – from Lake County Medium Urban Density to Lady Lake Manufactured Home High Density for Five Lots Consisting of Approximately 0.64 +/- Acres of Land, Located in Orange Blossom Gardens Unit, 1, 3 and 3.1b. (Thad Carroll)

Town Attorney Derek Schroth read the ordinance by title only.

Growth Management Director Thad Carroll gave the background summary for this agenda item (on file in the Clerk's office). He stated that the applicant, Martin L. Dzuro, on behalf of the Villages of Lake-Sumter, Inc., John and Patricia Porto, and Pamela A. Barsness, has filed applications to annex properties consisting of five lots located north of Griffin Avenue and northeast of North Highway 27/441 within the Orange Blossom Garden Subdivisions Units 1, 3, and 3.1B. The annexation application involves 0.64 +/- acres of property from unincorporated Lake County into the Town of Lady Lake.

Mr. Carroll stated the five lots are spread out along different roads and include the following addresses:

- 1026 Aloha Way
- 803 Aloha Way
- 811 Truman Avenue
- 815 Royal Palm Avenue
- 817 Royal Palm Avenue

He stated staff recommends approval of this ordinance. A map and an aerial view of the properties was shown, as were photos of the posting of each property.

The subject properties lie in Section 06, Township 18 South, Range 24 East, in Lake County, Florida. Appropriate legal descriptions, a location map, and a sketch of the property have been included with the submitted application. All lots will be served by the Village Center Community Development District Central Water and Sewer System, as well as the District's Fire Department.

In accordance with the provisions of Florida Statute 171.205, and the Interlocal Service Boundary Agreement executed September 4, 2013 between Lake County, Florida and the Town of Lady Lake, Florida, the Town may annex property into the Town which are non-contiguous to the existing municipal boundary. The proposed properties under this application exist as non-contiguous lots.

The annexation application was received on Monday, February 29, 2016, and has been reviewed and determined to be complete, satisfying the necessary criteria as required for annexation under statutory requirements. The application was found to meet the requirements of the Land Development Regulations (LDRs) as well as the adopted Comprehensive Plan, and is ready for transmittal to the Town Commission.

Mr. Carroll reported that notices to inform the surrounding property owners (70) within 150 feet of the properties proposed by annexation request were mailed Thursday, March 24, 2016, and the properties were posted the same date. There have been no objections or letters of support received on this application.

Mr. Carroll reported that the Technical Review Committee (TRC) members individually reviewed application for Ordinance No. 2016-11, and determined the application to be complete and ready for transmittal to the Planning and Zoning Board. At the April 11, 2016 meeting, the Planning and Zoning Board recommended approval of Ordinance No. 2016-11 by a vote of 3-0. The Town Commission is scheduled to consider Ordinance No. 2016-11 for second/final reading on Monday, May 16, 2016 at 6:00 p.m. He stated Martin Dzuro is present to answer any questions.

Mayor Kussard asked if anyone had any questions or comments, and hearing none, asked for a motion.

Upon a motion by Commissioner Hannan and seconded by Commissioner Holden, the Commission approved the first reading of Ordinance No. 2016-11 by the following roll call vote:

HOLDEN	***YES***
VINCENT	***YES***
HANNAN	***YES***
RICHARDS	***YES***
KUSSARD	***YES***

~~**8. Ordinance No. 2016-12 – First Reading – Small Scale Future Land Use Comprehensive Plan Amendment – The Villages of Lake Sumter, Inc., John and Patricia Porto, and Pamela A. Barsness – from Lake County Medium Urban Density to Lady Lake Manufactured Home High Density for Five Lots Consisting of Approximately 0.64 +/- Acres of Land, Located in Orange Blossom Gardens Unit, 1, 3 and 3.1b. (Thad Carroll)**~~

~~Town Attorney Derek Schroth read the ordinance by title only.~~

~~Growth Management Director Thad Carroll gave the background summary for this agenda item (on file in the Clerk's office). He stated that the applicant, Martin L. Dzuro, on behalf of The Villages of Lake Sumter, Inc., John and Patricia Porto, and Pamela A. Barsness, has filed applications to amend the future land use comprehensive plan for properties consisting of five lots located north of Griffin Avenue and northeast of North Highway 27/441 within the Orange Blossom Garden Subdivisions Units 1, 3, and 3.1B. The application involves 0.64 +/- acres of property from unincorporated Lake County into the Town of Lady Lake. Staff recommends approval of this ordinance. The proposed properties are as follows:~~

PLANNING & ZONING BOARD AGENDA ITEM

REQUESTED BOARD MEETING DATE: April 11, 2016

SUBJECT: **Ordinance 2016-11 – Annexation of Property Being 0.64 +/- Acres Of Land Owned by the Villages Of Lake-Sumter, Inc., John and Patricia Porto, and Pamela A. Barsness, Referenced By Alternate Keys 1482461, 2717963, 2717831, 2665947, 1483921; 5 Lots, Which Are Located Within Orange Blossom Gardens Units 1, 3, And 3.1b**

DEPARTMENT: **GROWTH MANAGEMENT**

STAFF RECOMMENDED MOTIONS:

1. **Motion to forward Ordinance 2016-11- The Villages of Lake-Sumter, Inc. John and Patricia Porto, And Pamela A. Barsness – Requesting Annexation of 5 lots consisting of approximately 0.64 +/- acres of land which are located within Orange Blossom Gardens Units 1, 3, and 3.1B within Lake County, Florida, with the recommendation of approval.**

2. **Motion to forward Ordinance 2016-11- The Villages of Lake-Sumter, Inc. John and Patricia Porto, And Pamela A. Barsness – Requesting Annexation of 5 lots consisting of approximately 0.64 +/- acres of land which are located within Orange Blossom Gardens Units 1, 3, and 3.1B within Lake County, Florida, with the recommendation of denial.**

Staff is in support of Motion Number 1

Applicant, Martin L. Dzuro, on behalf of the Villages of Lake-Sumter, Inc., John and Patricia Porto, and Pamela A. Barsness, has filed applications to annex properties consisting of 5 Lots located north of Griffin Avenue and northeast of North Highway 27/441 within the Orange Blossom Garden Subdivisions Units 1, 3, and 3.1B. The annexation application involves 0.64 +/- acres of property from unincorporated Lake County into the Town of Lady Lake.

The 5 lots are spread out along different roads and include the following addresses:

- 1026 Aloha Way
- 803 Aloha Way
- 811 Truman Avenue
- 815 Royal Palm Avenue
- 817 Royal Palm Avenue

The subject properties lie in Section 06, Township 18 South, Range 24 East, in Lake County, Florida. Appropriate legal descriptions, a location map, and a sketch of the property have been included with the submitted application. All lots will be served by the Village Center Community Development District Central Water and Sewer System, as well as the District's Fire Department.

In accordance with the provisions of Florida Statute 171.205, and the Interlocal Service Boundary Agreement executed September 4, 2013 between Lake County, Florida and the Town of Lady Lake, Florida, the Town may annex property into the Town which are non-contiguous to the existing municipal boundary. The proposed properties under this application exist as non-contiguous lots.

The annexation application was received on Monday, February 29, 2016, and has been reviewed and determined to be complete satisfying the necessary criteria as required for annexation under statutory requirements. The application was found to meet the requirements of the Land Development Regulations (LDRs) as well as the adopted Comprehensive Plan, and is ready for transmittal to the Town Commission.

Notices to inform the surrounding property owners (70) within 150 feet of the properties proposed by annexation request were mailed Thursday, March 24, 2016. The properties were also posted Thursday, March 24, 2016.

Past Actions:

The **Technical Review Committee (TRC)** members individually reviewed application for Ordinance 2016-11, and determined the application to be complete and ready for transmittal to the P&Z Board.

Public Hearings

The **Town Commission** is scheduled to consider Ordinance 2016-11 for first reading on Monday, May 2, 2016 at 6:00 p.m. The second and final reading will be held on Monday, May 16, 2016 at 6:00 p.m.

FISCAL IMPACT: $ TBD – pending value of future homes

[ ] Capital Budget **[ ] Operating** **[ ] Other**

ATTACHMENTS: **[X] Ordinance(s)** **[ ] Resolution** **[ ] Budget Resolution**

[ ] Other

[ ] Support Documents/Contracts Available for Review in Manager's Office

4-5-2016

DEPARTMENT HEAD	**Submitted** 4/5/16	**Date**
FINANCE DEPARTMENT	**Approved as to Budget Requirements**	**Date**
TOWN ATTORNEY	**Approved as to Form and Legality**	**Date**

TOWN MANAGER

Approved Agenda Item for: 4/11/16

Date 4/5/16

BOARD ACTION: [✓] Approved as Recommended CHASSOY/MCKENZIE [ ] Disapproved

[ ] Tabled Indefinitely [ ] Continued to Date Certain

[ ] Approved with Modifications

CC: THAD - G.M.

MINUTES OF THE TOWN OF LADY LAKE
REGULAR PLANNING AND ZONING BOARD MEETING
LADY LAKE, FLORIDA

April 11, 2016
5:30pm

The Planning and Zoning Board Meeting was held in the Town Hall Commission Chambers at 409 Fennell Blvd., Lady Lake, Florida. The meeting convened at 5:30 p.m.

CALL TO ORDER: John Gauder, Chairperson

PLEDGE OF ALLEGIANCE: John Gauder, Chairperson

ROLL CALL Michael McKenzie, Member
Peter Chiasson, Member
William Sigurdson, Vice Chair/Member is absent
John Gauder, Chairperson

STAFF MEMBERS PRESENT: Thad Carroll, Growth Management Director; Wendy Then, Town Planner; Carol Osborne, Staff Assistant to Town Clerk; and Nancy Slaton, Deputy Town Clerk.

Also Present: Attorney Sasha Garcia, BRS Legal; Martin Dzuro, of The Villages of Lake-Sumter, Inc., Attorney Angela Strange and Grant Gore, Lady Lake, Inc.

OPEN FORUM:

Chairperson Gauder asked if there were any comments or questions from the audience.

- Herb Holmes stated the font on the presentation slide on the overhead screen is too small for him to read, and requested for it to be enlarged.

Growth Management Director Thad Carroll stated the presentation slide is scaled to include all information on one page. Mr. Carroll stated he would make a copy of the slide for Mr. Holmes.

NEW BUSINESS:

1. Approval of Minutes – February 8, 2016 Regular Meeting

Upon a motion by Member Chiasson and a second by Member McKenzie, the Planning and Zoning Board approved the minutes of the Planning and Zoning Board Meeting of February 8, 2016 as presented by a vote of 3-0.

2. Ordinance No. 2016-11 – Annexation – The Villages of Lake-Sumter, Inc., John and Patricia Porto, and Pamela A. Barsness – Property Being 0.64 +/- Acres of Land (Alternate Keys 1482461, 2717963, 2717831, 2665947, 1483921); Five Lots, which are Located within Orange Blossom Gardens Units 1, 3, And 3.1b (Wendy Then)

DRAFT

Town Planner Wendy Then presented the background summary for this agenda item (on file in the Clerk's Office). She stated that the applicant, Martin L. Dzuro, on behalf of the Villages of Lake-Sumter, Inc., John and Patricia Porto, and Pamela A. Barsness, has filed applications to annex properties consisting of five lots located north of Griffin Avenue and northeast of North Highway 27/441 within the Orange Blossom Garden Subdivisions Units 1, 3, and 3.1B. The annexation application involves 0.64 +/- acres of property from unincorporated Lake County into the Town of Lady Lake.

Ms. Then stated the five lots are spread out along different roads and include the following addresses:

- 1026 Aloha Way
- 803 Aloha Way
- 811 Truman Avenue
- 815 Royal Palm Avenue
- 817 Royal Palm Avenue

The subject properties lie in Section 06, Township 18 South, Range 24 East, in Lake County, Florida. Appropriate legal descriptions, a location map, and a sketch of the property have been included with the submitted application. All lots will be served by the Village Center Community Development District Central Water and Sewer System, as well as the District's Fire Department.

In accordance with the provisions of Florida Statute 171.205, and the Interlocal Service Boundary Agreement executed September 4, 2013 between Lake County, Florida and the Town of Lady Lake, Florida, the Town may annex property into the Town which are non-contiguous to the existing municipal boundary. The proposed properties under this application exist as non-contiguous lots.

The annexation application was received on Monday, February 29, 2016, and has been reviewed and determined to be complete satisfying the necessary criteria as required for annexation under statutory requirements. The application was found to meet the requirements of the Land Development Regulations (LDRs) as well as the adopted Comprehensive Plan, and is ready for transmittal to the Town Commission.

Notices to inform the surrounding property owners (70) within 150 feet of the properties proposed by annexation request were mailed Thursday, March 24, 2016, and the properties were posted this same date. Ms. Then stated there have been no objections. There were two inquiries regarding annexation.

The Technical Review Committee (TRC) members individually reviewed application for Ordinance No. 2016-11, and determined the application to be complete and ready for transmittal to the Planning and Zoning Board. The Town Commission is scheduled to consider Ordinance No. 2016-11 for first reading on Monday, May 2, 2016 at 6:00 p.m., and for second/final reading on Monday, May 16, 2016 at 6:00 p.m.

Chairperson Gauder asked if there were any comments or questions from the board or from the audience.

- William Wilcox, residing at 1015 Aloha Way, Lady Lake, stated his only objection is, in the future, he will be forced to annex into The Town of Lady Lake regardless if he wants to or not.

DRAFT

Mr. Wilcox stated The Villages are building houses in various locations and, because of this, he fears a percentage of homeowners will be forced to annex.

Growth Management Director, Thad Carroll, stated the position of the Town of Lady Lake is to not force annexation of property. These applications have been voluntary; the property owners requested to come into the Town for various reasons, in this case to pull the building permits from the Town. Because the Lake County offices are located in Tavares, it is easier for them to deal with the Town and its building codes. The Town does not provide water or sewer services to these properties.

- Mr. Wilcox questioned if there are any scenarios where he would be forced to annex and, if so, would he need to comply with the Town's ordinances or The Villages'.

Mr. Carroll stated these are two separate issues. If you live in The Villages, you need to comply with The Villages' Home Owner's Association, which is a separate set of restrictions. The Town's code is followed unless the case is more stringent, then The Villages' code must be followed. Mr. Carroll stated that would be a civil matter between the homeowner and the Home Owner's Association.

- Mr. Wilcox stated his desire to build a two-story home, and has been denied by The Villages', and stated this would be acceptable in the Town.

Mr. Carroll stated that is part of the agreement that homeowners enter into with the Villages, and the Town does not interfere with those issues.

Hearing no further comments, Chairperson Gauder asked for a motion from the board.

Upon a motion by Member Chiasson and a second by Member McKenzie, the Planning and Zoning Board recommended transmittal and approval of Ordinance No. 2016-11 to the Town Commission for consideration by the following roll call vote:

MCKENZIE	*YES*
CHIASSON	*YES*
GAUDER	*YES*

3. Ordinance No. 2016-12 – Small Scale Future Land Use Comprehensive Plan Amendment – The Villages of Lake-Sumter, Inc., John and Patricia Porto, and Pamela A. Barsness – Changing from Lake County Medium Urban Density to Lady Lake Manufactured Home High Density – Property Being 0.64 +/- Acres of Land (Alternate Keys 1482461, 2717963, 2717831, 2665947, 1483921); Five Lots, which are Located within Orange Blossom Gardens Units 1, 3, And 3.1b (Wendy Then)

Town Planner Wendy Then presented the background summary for this agenda item (on file in the Clerk's Office). Ms. Then stated that the applicant, Martin L. Dzuro, on behalf of the Villages of Lake-Sumter, Inc., John and Patricia Porto, and Pamela A. Barsness, has filed applications to amend the future land use comprehensive plan for properties consisting of five lots located north of Griffin Avenue and northeast of North Highway 27/441 within the Orange Blossom Garden Subdivisions Units 1, 3, and 3.1B. The application involves 0.64 +/- acres of property from unincorporated Lake County into the Town of Lady Lake. The proposed properties are as follows:

DRAFT

K-8

TOWN COMMISSION AGENDA ITEM

REQUESTED COMMISSION MEETING DATE: **May 16, 2016 – Second/Final Reading**

SUBJECT: **Ordinance 2016-12 —Small Scale Future Land Use Comprehensive Plan Amendment from Lake County Medium Urban Density to Lady Lake Manufactured Home High Density for 5 lots consisting of approximately 0.64 +/- acres of land, owned by The Villages of Lake-Sumter, Inc., John and Patricia Porto, and Pamela A. Barsness, which are located within Orange Blossom Gardens Units 1, 3, and 3.1B, Referenced by Alternate Keys 1482461, 2717963, 2717831, 2665947, 1483921.**

DEPARTMENT: **GROWTH MANAGEMENT**

STAFF RECOMMENDED MOTIONS:

Staff Recommends approval of Ordinance No. 2016-12, a Small Scale Comprehensive Plan Amendment – Requesting to Change approximately 0.64 +/- acres of land from Lake County Medium Urban Density to Lady Lake Manufactured Home High Density.

Applicant, Martin L. Dzuro, on behalf of the Villages of Lake-Sumter, Inc., John and Patricia Porto, and Pamela A. Barsness, has filed applications to amend the future land use comprehensive plan for properties consisting of 5 Lots located north of Griffin Avenue and northeast of North Highway 27/441 within the Orange Blossom Garden Subdivisions Units 1, 3, and 3.1B. The application involves 0.64 +/- acres of property from unincorporated Lake County into the Town of Lady Lake. The proposed properties are as follows:

- 1026 Aloha Way
- 803 Aloha Way
- 811 Truman Avenue
- 815 Royal Palm Avenue
- 817 Royal Palm Avenue

The Small Scale Future Land Use Map Amendment application was received on Monday, February 29, 2016, and has been reviewed and determined to be complete satisfying the necessary criteria as required to meet the requirements of the Land Development Regulations (LDRs) as well as the adopted Comprehensive Plan, and is ready for transmittal to the Town Commission.

Notices to inform the surrounding property owners (70) within 150' of the property of the proposed annexation were mailed on Thursday, March 24, 2016. The properties were also posted Thursday, March 24, 2016.

Concurrency Determination Statement

The Villages has removed existing manufactured homes on three (3) of the lots in a historic section of the Villages known as Orange Blossom Gardens to construct a similar size conventional built home on each lot (the two homes on Aloha Way have yet to be removed). There will be no increase in utility services, traffic, population, or recreation use.

Impact on Town Services

Potable Water-

- No impact, lots are served by the Village Center Community Development District Central Water System.

Sewer -

- No impact, lots are served by the Village Center Community Development District Central Sewer System.

Schools –

- Not factored for project – no foreseen impact of students as the project is located within an active adult retirement community.

Transportation –

- No impact, the existing home will be replaced with a new home. There will be no change in average daily trip generation.

Parks & Recreation –

- The small scale future land use amendment will not cause P&R Level of Service to be exceeded since the project is for the replacement of existing homes. Additionally, the Villages provides its residents with all Park and Recreation Amenities.

Stormwater –

- Project will be required to adhere to SJRWMD guidelines and of Town of Lady Lake Floodplain Management Ordinance for parcels within Special Flood Hazard Areas.

Applications have been reviewed and determined to be complete. The applicant has submitted all appropriate material in compliance with the Land Development Regulations (LDRs) and the application is ready for transmittal to the Town Commission. Additionally, the applications were reviewed and determined to be in compliance with the directives of the adopted Comprehensive Plan in accordance

with the sought designation. A Concurrency Determination Statement has also been included as part of the Small Scale Comprehensive Plan Amendment Application, which the applicant submitted to explain expected impacts on Town Services.

The subject properties involve approximately 0.64 ± acres lie in Section 06, Township 18 South, Range 24 East in Lake County, Florida. The Future Land Use of the adjacent properties is as follows:

Future Land Use

Subject Properties	Lake County Medium Urban Density
Future Land Use of Adjacent Properties	
West	Lake County Medium Urban Density
East	Lake County – Medium Urban Density
North	Lake County Medium Urban Density
South	Lake County Medium Urban Density

Comments:

1.) Annexation and Rezoning Applications have been submitted concurrently with this Small Scale Future Land Use Amendment Application.

2.) In accordance to the Interlocal Agreement for Building Permits & Inspections Section 2).A)., executed on June 23, 2015, if the Villages has applied for annexation, then the Town can issue building permits located within the unincorporated area.

3.) Project will be required to adhere to St. John's River Water Management District guidelines and the Town of Lady Lake Floodplain Management Ordinance for parcels within Special Flood Hazard Areas.

Past Actions:

The **Technical Review Committee (TRC)** members individually reviewed application for Ordinance 2016-12, and determined the application to be complete and ready for transmittal to the P&Z Board.

At the April 11, 2016 meeting, the **Planning and Zoning Board** recommended approval of Ordinance 2016-12 by a vote of 3-0.

At the May 2, 2016 meeting, the **Local Planning Agency** voted 5-0 for approval of Ordinance 2016-12.

At the May 2, 2016 meeting, the **Town Commission** voted 5-0 for approval of Ordinance 2016-12 upon First Reading.

FISCAL IMPACT: $_____

[ ] Capital Budget **[ ] Operating** **[ ] Other**

ATTACHMENTS: **[X] Ordinance(s)** **[ ] Resolution** **[ ] Budget Resolution**

[ ] Other

[ ] Support Documents/Contracts Available for Review in Manager's Office

---

DEPARTMENT HEAD **Submitted** 5/9/16 **Date**

5-9-2016 **FINANCE DEPARTMENT** **Approved as to Budget Requirements** **Date**

TOWN ATTORNEY **Approved as to Form and Legality** **Date**

TOWN MANAGER For KK **Approved Agenda Item for:** 5-16-16 **Date**

BOARD ACTION: **[ ] Approved as Recommended** **[ ] Disapproved**

[ ] Tabled Indefinitely **[ ] Continued to Date Certain**

[ ] Approved with Modification

ORDINANCE NO. 2016-12

AN ORDINANCE PERTAINING TO COMPREHENSIVE PLANNING IN THE TOWN OF LADY LAKE, FLORIDA; AMENDING THE TOWN OF LADY LAKE ORDINANCE NO. 81-1-(83), WHICH ESTABLISHED THE TOWN OF LADY LAKE COMPREHENSIVE PLAN; PROVIDING FOR A SMALL SCALE FUTURE LAND USE MAP AMENDMENT; PROVIDING FOR SEVERABILITY; AND PROVIDING AN EFFECTIVE DATE.

BE IT ORDAINED BY THE TOWN OF LADY LAKE TOWN COMMISSION:

Section 1. Legislative Findings, Purpose, and Intent.

a. On February 2, 1981, the Town Commission of the Town of Lady Lake adopted a Comprehensive Plan pursuant to Florida Statute 163.3184, known as the "Local Government Comprehensive Planning Act" ("Act"), which sets forth the procedures and requirements for a local government in the State of Florida to adopt a Comprehensive Plan and amendments (to a Comprehensive Plan).

b. The Town Commission adopted the Lady Lake Comprehensive Plan by Ordinance No. 81-1-(83), and amended said Ordinance by Ordinance No. 91-21, approved December 2, 1991, and Ordinance No. 94-16, approved on October 12, 1994.

c. The Town's Local Planning Agency reviewed a proposed amendment to the Future Land Use Map Series of the Town of Lady Lake Comprehensive Plan on May 2, 2016, and recommended to the Town Commission that said amendment be adopted by the Town Commission.

d. The Town Commission has held public hearings on the proposed amendment to the Future Land Use Map Series of the Comprehensive Plan, and received comments from the general public and the Local Planning Agency.

e. The Town of Lady Lake has complied with the requirements of the Act for amending the Comprehensive Plan.

Section 2. Authority.

This ordinance is adopted in compliance with and pursuant to the Local Government Comprehensive Planning and Land Development Regulation Act, Sections 163.3161 – 163.3243, Florida Statutes, as amended.

Section 3. Small Scale Amendment to the Future Land Use Element Map Series.

The Comprehensive Plan, as amended, is hereby further amended by amending the Future Land Use Element Map Series with the small scale amendment as indicated below:

Applicant/Owner:	The Villages of Lake-Sumter, Inc./John and Patricia Porto and Pamela A. Barsness

General Location:	North of Griffin Avenue and northeast of North Hwy 27/441, 5 lots located within the Orange Blossom Gardens Subdivision Units 1, 3, and 3.1B, within Lake County, Florida.
Acres:	0.64 +/- Acres
Future Land Use:	Change **from** Lake County – Medium Urban Density **to** Town of Lady Lake Manufactured Home High Density (MH-HD).

Graphic representation of this Small Scale Future Land Use Element Map Amendment is shown in the attached "Exhibit A".

Section 4. Severability

The provisions of this Ordinance are declared to be separable and if any section, sentence, clause or phrase of this Ordinance shall for any reason be held to be invalid or unconstitutional, such decision shall not effect the validity of the remaining sections, sentences, clauses or phrases of this Ordinance, but they shall remain in effect, it being the legislative intent that this Ordinance shall stand notwithstanding the invalidity of any part.

Section 5. Effective Date.

This ordinance shall become effective as provided in Chapter 163, Florida Statutes.

PASSED AND ORDAINED this **16th** day of **May**, **2016.**

TOWN OF LADY LAKE, FLORIDA

_____
Ruth Kussard, Mayor

ATTEST:

_____
Kristen Kollgaard, Town Clerk

APPROVED AS TO FORM:

_____
Derek Schroth, Town Attorney

EXHIBIT "A" - Legal Descriptions and Map

Parcel ID #: 06-18-24-0100-0000-7400; Lot 74, Unit 1, Orange Blossom Gardens, according to the plat thereof recorded in Plat Book 18, Page 9, Public Records of Lake County, Florida.

Parcel ID #: 06-18-24-0350-000-19400; Lot 194, Unit 3-lB, Orange Blossom Gardens, according to the plat thereof recorded in Plat Book 25, Page 33, Public Records of Lake County, Florida.

Parcel ID #: 06-18-24-0300-000-11000; Lot 110, Unit 3, Orange Blossom Gardens, according to the plat thereof recorded in Plat Book 23, Pages 27 through 29, Public Records of Lake County, Florida.

Parcel ID #: 06-18-24-0300-000-11100; Lot 111, Unit 3, Orange Blossom Gardens, according to the plat thereof recorded in Plat Book 23, Pages 27 through 29, Public Records of Lake County, Florida.

-AND

Parcel ID #: 06-18-24-0300-000-13100; Lot 131, Unit 3, Orange Blossom Gardens, according to the plat thereof recorded in Plat Book 23, Pages 27 through 29, Public Records of Lake County, Florida.

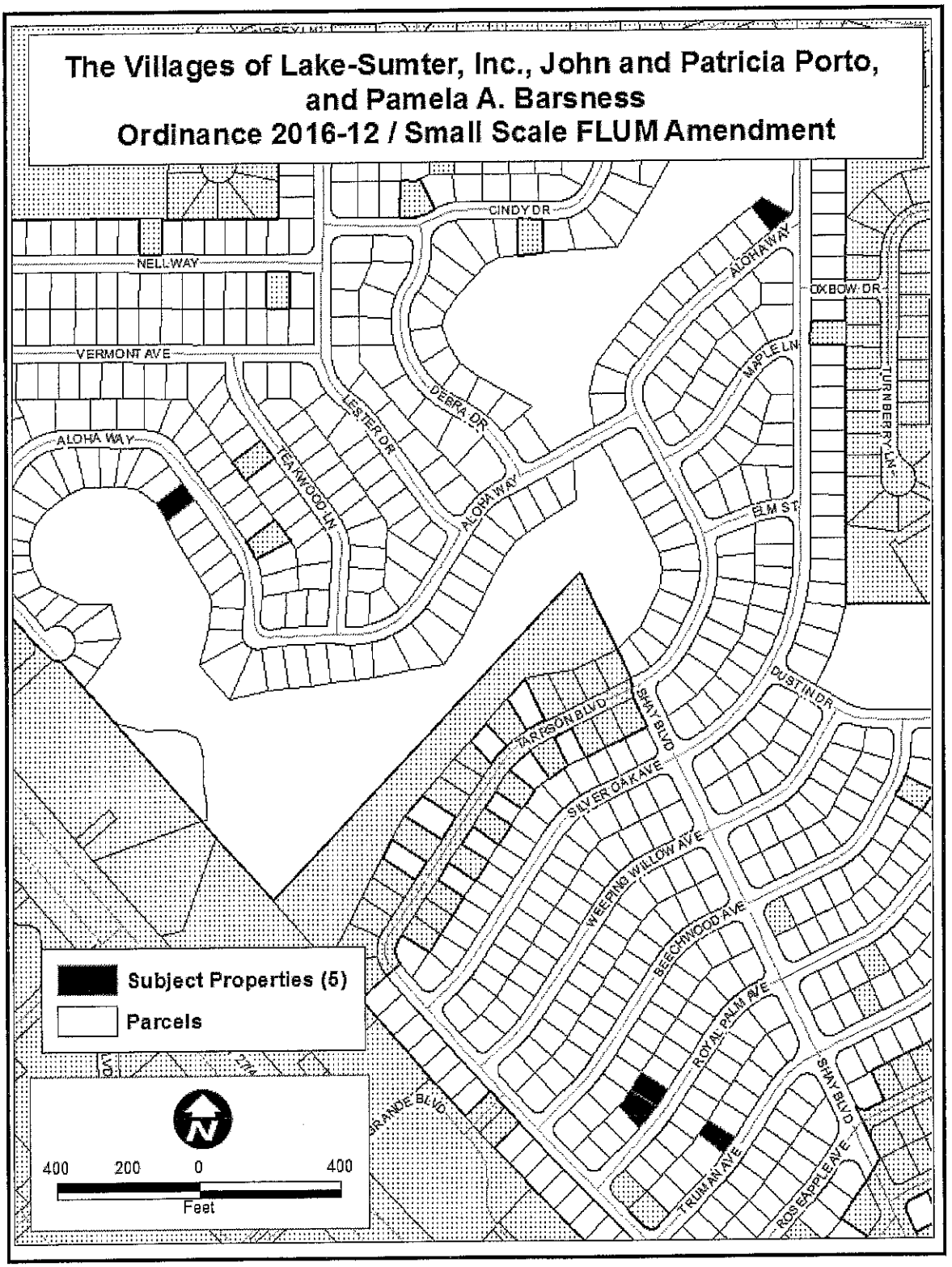
The Villages of Lake-Sumter, Inc., John and Patricia Porto, and Pamela A. Barsness
Ordinance 2016-12 / Small Scale FLUM Amendment
CINDY DR
NELL WAY
VERMONT AVE
ALOHA WAY
LESTER DR
TEAKWOOD LN
DERRA DR
ALOHA WAY
ALOHA WAY
OXBOW DR
MAPLE LN
TURNBERRY LN
ELM ST
DUST IN DR
TARPON BLVD
SHAY BLVD
SILVER OAK AVE
WEEPING WILLOW AVE
BEECHWOOD AVE
ROYAL PALM AVE
TRUMAN AVE
ROSE APPLE AVE
GRANDE BLVD
Subject Properties (5)
Parcels
400 200 0 400
Feet

1

FUTURE LAND USE MAP

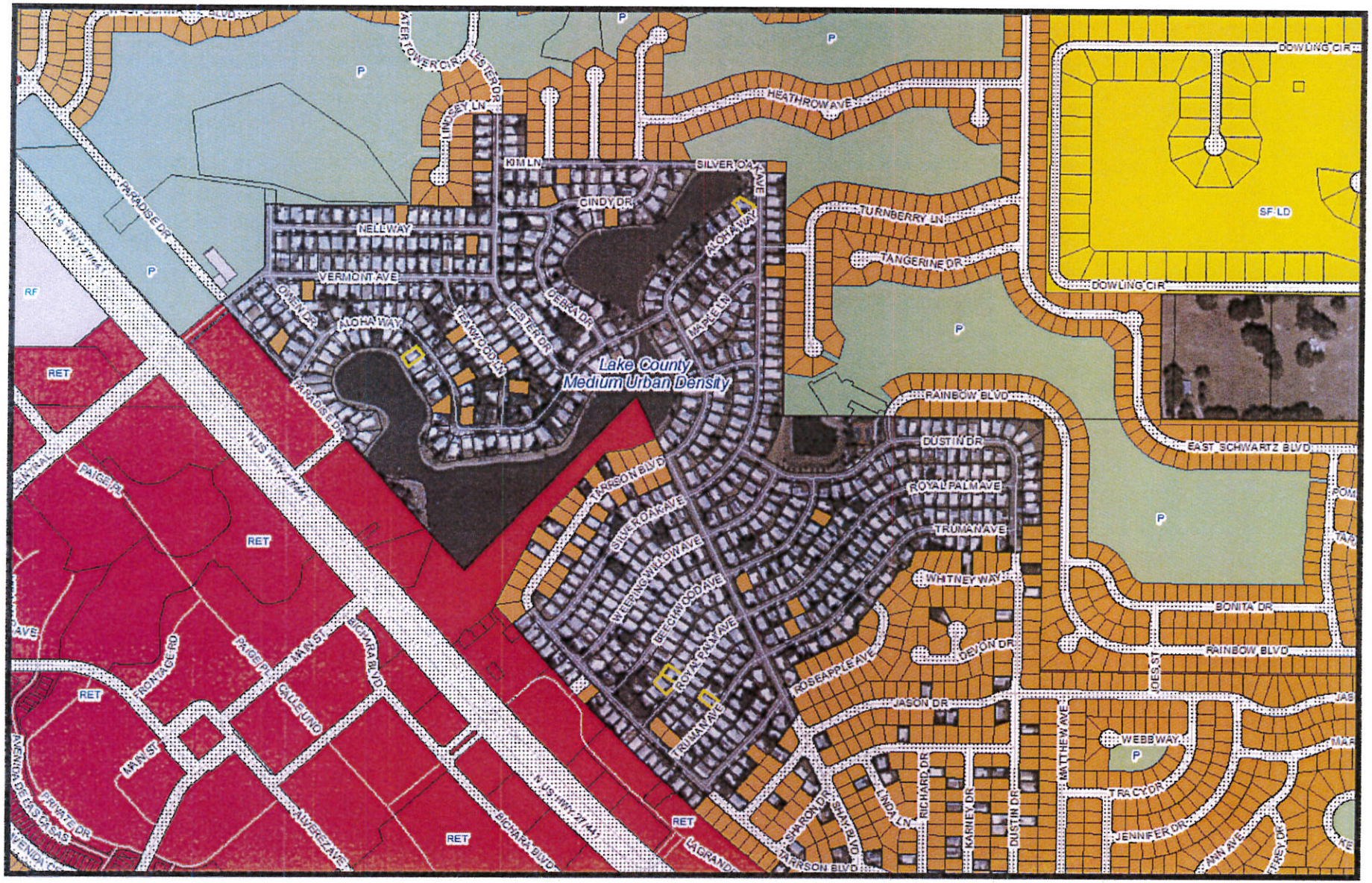

APPLICATION FOR THE SMALL SCALE DEVELOPMENT AMENDMENTS TO THE 2005-2025 COMPREHENSIVE PLAN (CP)
Town of Lady Lake

Small scale amendments must meet the following criteria of (Ch. 163.3187, F.S.):

- The proposed amendment must involve a property of ten (10) acres or less.
- A proposed amendment involving a residential land use may not exceed a density of the (10) units per acre.
- The proposed amendment does not require an amendment to the Urban Service Area boundary.
- The proposed amendment does not involve the same owner's property within 150 feet of property granted a change within the prior twelve (12) months.
- The proposed amendment cannot involve a change to the goals, policies, objectives or text of the Comprehensive Plan.
- Small scale amendment applications will only be accepted until the statutory sixty (60) acre cumulative total is reached.

In addition, staff may determine on a case-by-case basis, which amendments need to be processed as part of the regular amendment cycle.

Applications for small scale amendment accepted Monday through Friday from 8:00 AM to 5:00 PM. One (1) notarized and ten (10) copies of the application, ten (10) sets of any required exhibits and any attachments, together with an application fee of $2,500.00 (checks made payable to the TOWN OF LADY LAKE), must be filed with the Growth Management Department, 409 Fennell Boulevard, Lady Lake, Florida. All requests for a fee waiver must be formally approved by the Town of Lady Lake Commission.

Type or Print the following information, if applicable:

Owner(s)/Applicant* The Villages of Lake-Sumter, Inc./John and Patricia Porto/	Agent/Applicant Martin L. Dzuro, Vice President
Patricia A. Barsness	
Address 1020 Lake Sumter Landing/500 Elm Street Ext U, North	Address 1045 Lake Sumter Landing
Haven, CT 06473/803 Aloha Way, Lady Lake, FL 32159	
City The Villages	City The Villages
State FL Zip 32162	State FL Zip 32162
Phone (H)	Phone (H)
Phone (W)	Phone (W) (352) 753-6262
Fax	Fax (352) 753-6264

Adopted Future Land Use Designation(s) Lake County Medium Density Urban
Requested Future Land Use Designation(s) Lady Lake MH-HD - Manufactured Home High Density

*If someone other than the property owner is submitting this application, then the attached Agent Authorization Form must be completed (Page 5).

PROPERTY LOCATION:

Section 6	Township 18	Range 24
Subdivision See attached list.	Block N/A	Lot/Parcel# See attached list.
Address (if available)		
Tax Identification Number See attached list.		
Existing Zoning Lake County RM - Residential Medium	Anticipated Zoning Lady Lake MX-8 Mixed Single Family	

NOTE: IF THE ANTICIPATED OR REQUIRED ZONING IS PLANNED DEVELOPMENT, A PRELIMINARY LAND USE PLAN MAY BE REQUIRED PRIOR TO THE LADY LAKE COMMISSION PUBLIC HEARING.

Existing Use of Subject Property: Medium density urban

Proposed Use of the Subject Property: MH-HD - Manufactured Home High Density

Total Gross Acreage of Parcel (Including wetlands and water bodies): Approximately 0.64

Developable Acreage to be Amended: Approximately 0.64

If Conservation Areas (wetlands) or natural water bodies exist on-site, give estimated acreage of each: None.
(Submit any previously completed wetland determination studies).

If multiple designations are requested for the subject property, indicate the acreage of each designation and include a map showing the location of each use: Not applicable

Is this proposal a Certified Lady Lake Affordable Housing Project? Yes____ No X
(If yes, attach certification).

Has an application for rezoning or other development permit been submitted to the Town?
Yes X No ____
(If yes, type and date submitted _____).

Has the project/property been subject to any Town action, including a comprehensive plan amendment, within the last five (5) years? Yes____ No X
(If yes, indicate type and date _____).

REQUIRED SUBMITTALS
(Ten (10) copies of each)

1. The complete legal description of the property and portion thereof that the amendment is being requested for, **typed on a separate sheet of paper.**

2. Certified survey of the subject property or a County Property Appraiser's map illustrating the exact parcel may be accepted in lieu of a survey (County Property Appraiser's maps are available from Lake County Maps Sales, 123 N. Sinclair Ave., Tavares).

3 Vicinity map depicting the subject property and major roadways.

4. For property within flood prone areas, include Flood Insurance Rate Map, Flood Hazard Boundary Map or other information for determining suitability for development (Flood maps are available from the Lady Lake Building Department).

5. Attach justification statement and appropriate data and analysis to support the requested change including, but not limited to, adjacent land use compatibility; availability of sanitary sewer and potable water; why the amendment is consistent with and furthers various objectives and/or policies of the Comprehensive Plan; existing traffic or environmental studies; and any other information which supports this request.

6. Attach a listing of property owners within 150 feet of the subject property. The list may be obtained from the Lake County Property Appraisers Office located at 317 West Main Street, Tavares, Florida or you may get the information off of Lake County's GIS website www.lakegovernment.com.

ADDITIONAL APPLICATION INFORMATION

1. **Applicants are requested to seek a pre-application conference with the Community Development staff to discuss the content and format of the amendment proposal.** Acceptance of an application for amendment to the CP should not be construed as staff support of the amendment request. Please contact the Growth Management Department at (352) 751-1520 to schedule an appointment.

2. Small scale amendments require two (2) public hearings for adoption. The Local Planning Agency (LPA) public hearing and the Lady Lake Commission public hearing. A flow chart of the small scale process is attached to this application.

3. Applications for a comprehensive plan amendment which were previously not transmitted or adopted by the Town of Lady Lake Commissioners cannot be reconsidered for a period of two (2) years of that action.

4. Comprehensive Plan Amendment does not guarantee/entitle the applicant/owner to a development permit.

5. The current owner of the subject property must sign the application. Agents must submit the attached Agent Authorization Form .

6. Only one contiguous development per application for a Future Land Use Map amendment will be accepted. Contiguous property can be submitted on one application upon authorization of all property owners.

7. Upon review of the submitted application, the Growth Management Department may find an application incomplete and request that the applicant resubmit the application with clarification or additional information, Resubmitted applications or additional information are due within fifteen (15) working days of notice from the Growth Management Department unless special permission is granted by the Growth Management Director, or his/her designee, to accommodate special/lengthy requests.

8. Application fees shall be refunded only if an application is withdrawn upon request of either the property owner or agent prior to the first public notice of hearing.

9. The following shall be exempted from the payment of the amendment fee: Lake County, the Lake County School Board, the State of Florida, the United States of America, municipalities situated wholly within the boundaries of the County and established transportation authorities. Others may request a fee waiver from the Lady Lake Commission through a request to the Growth Management Director.

10. The applicant and those he/she represents in this amendment are hereby put on notice that approval of this application by the Lady Lake Commission, which is then challenged by an affected party, is not "effective" until a final order determining the adopted amendment to be in compliance is issued by the Department of Community Affairs or the Administration Commission. Therefore, the applicant and those he/she represent are hereby put on notice that there shall be no reliance on, and, the Town shall not be responsible for any reliance on an approval of this application until it is "effective", pursuant to law. Amendments which are not challenged are effective thirty-one (31) days after adoption. The Town does not issue any development orders (e.g., rezoning).

11. Applicants are required to place a notice of public hearing poster on property involved in this amendment request prior to the public hearings. The Growth Management Department will prepare the poster for posting. The Growth Management Department provides public hearing notices to property owners within 150 feet of property subject to an amendment.

12. Dependent upon the type of amendment request, the applicant may be required to participate in a neighborhood meeting(s) in order to provide additional information and notice to surrounding residents about the proposed development.

THE FOLLOWING SECTION MUST BE COMPLETED BY ALL APPLICANTS:

I, the undersigned, have read the application for an amendment to the Town of Lady Lake Comprehensive Plan and hereby attest that the above referenced information, including attached exhibits, is true and correct to the best of my knowledge and, during the pendency of this application, I understand my continuing obligation to notify the Growth Management Director or his designee in writing of the inaccuracy of any statement or representation which was incorrect when made or which becomes incorrect by virtue of changed circumstances.

Signature of the Applicant, Property owner or Agent

Feb. 26, 2016
Date

Martin L. Dzuro, V.P. The Villages of Lake-Sumter Inc.
Printed Name Martin L. Dzuro

STATE OF Florida
COUNTY OF Sumter

THE FOREGOING INSTRUMENT was acknowledged before me this 26th day of Feb, 20 16, by Martin L. Dzuro, as an individual/officer/agent, on behalf of himself/herself The Villages of Lake-Sumter, Inc., a corporation/partnership. He/she is personally know to me or has produced _____ as identification and did/did not take an oath.

WITNESS my hand and official seal in the County and State last aforesaid this 26th day of Feb., 20 16.

Notary Public

Vicki C. Varnon
Printed Name
Commission No.: FF 909781
My Commission Expires: 9-22-19

(SEAL)

VICKI C. VARNON
MY COMMISSION EXPIRES
September 22, 2019
#FF 909781
Bonded thru Troy Fain - Insurance
NOTARY PUBLIC, STATE OF FLORIDA

Parcel ID #: 06-18-24-0100-0000-7400
Lot 74, Unit 1, Orange Blossom Gardens, according to the plat thereof recorded in Plat Book 18, Page 9, Public Records of Lake County, Florida.

Parcel ID #: 06-18-24-0350-000-19400
Lot 194, Unit 3-1B, Orange Blossom Gardens, according to the plat thereof recorded in Plat Book 25, Page 33, Public Records of Lake County, Florida.

Parcel ID #: 06-18-24-0300-000-11000
Lot 110, Unit 3, Orange Blossom Gardens, according to the plat thereof recorded in Plat Book 23, Pages 27 through 29, Public Records of Lake County, Florida.

Parcel ID #: 06-18-24-0300-000-11100
Lot 111, Unit 3, Orange Blossom Gardens, according to the plat thereof recorded in Plat Book 23, Pages 27 through 29, Public Records of Lake County, Florida.

-AND-

Parcel ID #: 06-18-24-0300-000-13100
Lot 131, Unit 3, Orange Blossom Gardens, according to the plat thereof recorded in Plat Book 23, Pages 27 through 29, Public Records of Lake County, Florida.

CONSENT AND DESIGNATION OF AGENT

The undersigned, JOHN PORTO and PATRICIA PORTO, as Owners of Lot 74, Orange Blossom Gardens, Unit 1, according to the plat thereof recorded in Plat Book 18, Page 9, Public Records of Lake County, Florida, hereby designate Martin L. Dzuro, Vice President of The Villages of Lake-Sumter, Inc., a Florida corporation, as its Agent, and authorizes him to execute all documents on their behalf in their Application for Annexation from Lake County into the Town of Lady Lake, a Small Scale Comprehensive Plan and Rezoning, and for submission of the Property for those purposes as set forth in the documents rendered in that process.

Dated this 10th day of February, 2016.

JOHN PORTO

PATRICIA PORTO

STATE OF FLORIDA
COUNTY OF SUMTER

The foregoing instrument was acknowledged before me this 10 day of February, 2016, by JOHN PORTO and PATRICIA PORTO, who produced Com. Powers License as identification or who are personally known to me.

Terry L. Jensen
State of Florida
MY COMMISSION # FF 140287
Expires: August 22, 2018

Notary Public, State of Florida

Terry L. Jensen
Printed Name

(SEAL)

My Commission Expires: Aug 22, 2018

CONSENT AND DESIGNATION OF AGENT

The undersigned, PAMELA A. BARSNESS, as Owners of Lot 194 Orange Blossom Gardens, Unit 3-1B, according to the plat thereof recorded in Plat Book 25, Pages 33, Public Records of Lake County, Florida, hereby designate Martin L. Dzuro, Vice President of The Villages of Lake-Sumter, Inc., a Florida corporation, as its Agent, and authorizes him to execute all documents on their behalf in their Application for Annexation from Lake County into the Town of Lady Lake, a Small Scale Comprehensive Plan and Rezoning, and for submission of the Property for those purposes as set forth in the documents rendered in that process.

Dated this 25 day of February, 2016.

Pamela A. Barsness
PAMELA A. BARSNESS

STATE OF FLORIDA
COUNTY OF ~~SUMTER~~ Lake

The foregoing instrument was acknowledged before me this 25 day of February, 2016, by PAMELA A. BARSNESS, who produced FL Driver's License as identification or who is personally known to me.

GIOVANNA FIORINO
MY COMMISSION # FF 946846
EXPIRES: December 29, 2019
Bonded Thru Notary Public Underwriters

Giovanna Fiorino
Notary Public, State of Florida
Giovanna Fiorino
Printed Name
My Commission Expires: 12/29/19

(SEAL)

INSTRUMENT#:2014021217 OR BK 4444 PG 1624 PAGES: 1 2/25/2014 3:51:25 PM
NEIL KELLY, LAKE COUNTY CLERK OF THE CIRCUIT COURT
REC FEES: $10.00 DEED DOC:$630.00

90,000

Prepared by and return to:
Gary Fuchslops
Attorney at Law
McLin & Burnsed PA
1028 Lake Sumter Landing
The Villages, FL 32162
File No.: B00303

RETURN TO

Rec _____
Doc _____
Int _____
Total _____

[Space Above This Line For Recording Data]

Warranty Deed

This Warranty Deed made this 6th day of February, 2014 between **Collin Priestley**, whose post office address is **#2 West 2nd St., Media, PA 19063 and Kristin Priestley**, whose post office address is 412 W. State St., Apt. #1. Media, PA 19063, grantors, and **John Porto and Patricia Porto, husband and wife**, whose post office address is **600 Elm Street Ext Unit 14-3, North Haven, CT 06473** grantees:

(Whenever used herein the terms "grantor" and "grantee" include all the parties to this instrument and the heirs, legal representatives, and assigns of individuals, and the successors and assigns of corporations, trusts and trustees)

WITNESSETH, that said grantors, for and in consideration of the sum of TEN AND NO/100 DOLLARS ($10.00) and other good and valuable considerations to said grantors in hand paid by said grantees, the receipt whereof is hereby acknowledged, has granted, bargained, and sold to the said grantees, and grantees' heirs and assigns forever, the following described land, situate, lying and being in **Lake County Florida** to-wit:

PARCEL ID #: 0618240100-000-07400

Lot 74, Unit 1, Orange Blossom Gardens, according to the plat thereof recorded in Plat Book 18, Page 9, Public Records of Lake County, Florida.

Together with the Manufactured Home, bearing VIN # 02630183 AK & BK thereon. The Titles have been retired.

This property does not constitute either the residence or the homestead of either Grantor named above as the same is defined by the Constitution or the laws of the State of Florida.

TOGETHER with all the tenements, hereditaments and appurtenances thereto belonging or in anywise appertaining.

TO HAVE AND TO HOLD, the same in fee simple forever.

AND the grantors hereby covenant with said grantees that the grantors are lawfully seized of said land in fee simple; that the grantors have good right and lawful authority to sell and convey said land; that the grantors hereby fully warrant the title to said land and will defend the same against the lawful claims of all persons whomsoever; and that said land is free of all encumbrances, except easements, restrictions and reservations of record, if any, and taxes accruing subsequent to December 31, 2013.

IN WITNESS WHEREOF, grantors have hereunto set grantors' hands and seals the day and year first above written.

Signed, sealed and delivered in our presence:

Witness Name: KEVIN QUINN

Witness Name: Achilleas Stavrianos S

Collin Priestley

Kristin Priestley

State of Pennsylvania
County of Delaware

The foregoing instrument was acknowledged before me this 6th day of February, 2014 by Collin Priestley and Kristin Priestley, who [✓] are personally known or [ ] have produced a driver's license as identification.

[Notary Seal]

NOTARIAL SEAL
MAYA P ALAM-KHANDKAR
Notary Public
HAVERFORD TWP, DELAWARE CNTY
My Commission Expires Apr 7, 2014

Notary Public

Printed Name: Maya P Alam-Khandkar

My Commission Expires: 4/7/2014

CFN 2005111288
Bk 02895 Pg 0357; (1pg)
DATE: 07/20/2005 03:55:21 PM
JAMES C. WATKINS, CLERK OF COURT
LAKE COUNTY
RECORDING FEES 10.00
DEED DOC 777.00

Prepared by and return to:
R. Dewey Burnsed/mls
Attorney at Law
McLin & Burnsed PA
1028 Lake Sumter Landing
The Villages, FL 32162
File No.: PV0742

10
777
787

[Space Above This Line For Recording Data]

Warranty Deed

This Warranty Deed made this 14th day of July, 2005 between **Lester K. Wortman, a married man, joined by his wife, Mary L. Wortman**, whose post office address is **5 Gateshead Drive, Apt 212, Dunedin, FL 34698**, grantor, and **Pamela A. Barsness, a single woman**, whose post office address is **22 Summerside Lane, Hyannis, MA 02601** grantee:

(Whenever used herein the terms "grantor" and "grantee" include all the parties to this instrument and the heirs, legal representatives, and assigns of individuals, and the successors and assigns of corporations, trusts and trustees)

WITNESSETH, that said grantor, for and in consideration of the sum of TEN AND NO/100 DOLLARS ($10.00) and other good and valuable considerations to said grantor in hand paid by said grantee, the receipt whereof is hereby acknowledged, has granted, bargained, and sold to the said grantee, and grantee's heirs and assigns forever, the following described land, situate, lying and being in **Lake County Florida** to-wit:

PARCEL ID #: 0618240350-000-19400

Lot 194, Unit 3.1B, Orange Blossom Gardens, according to the plat thereof recorded in Plat Book 25, Pages 33 through 35, Public Records of Lake County, Florida. MKH
A 1985 SHORLINE SHERWOOD 48' Manufactured Home, ID No. N12211, Title No. 22934874, and RP No. R198066.

TOGETHER with all the tenements, hereditaments and appurtenances thereto belonging or in anywise appertaining.

TO HAVE AND TO HOLD, the same in fee simple forever.

AND the grantor hereby covenants with said grantee that the grantor is lawfully seized of said land in fee simple; that the grantor has good right and lawful authority to sell and convey said land; that the grantor hereby fully warrants the title to said land and will defend the same against the lawful claims of all persons whomsoever; and that said land is free of all encumbrances, except easements, restrictions and reservations of record, if any, and taxes accruing subsequent to December 31, 2004.

IN WITNESS WHEREOF, grantor has hereunto set grantor's hand and seal the day and year first above written.

Signed, sealed and delivered in our presence:

Witness Name: Tara Popham — Lester K. Wortman (Seal)
Lester K. Wortman

Witness Name: A. Renée Fleisch — Mary L. Wortman (Seal)
Mary L. Wortman

State of Florida
County of Pinellas

The foregoing instrument was acknowledged before me this 14th day of July, 2005 by Lester K. Wortman, a married man, joined by his wife, Mary L. Wortman, who [_] is personally known or [X] has produced a driver's license as identification.

[Notary Seal]

MARY K. BROTMAN
Notary Public - State of Florida
My Commission Expires Apr 12, 2009
Commission # DD 418039

Notary Public, State of Florida MKB

Printed Name: MARY K. BROTMAN

My Commission Expires: 4/12/09

INSTRUMENT#: 2015135117 OR BK 4717 PG 515 PAGES: 1 12/15/2015 12:37:42 PM
NEIL KELLY, LAKE COUNTY CLERK OF THE CIRCUIT COURT
REC FEES: $10.00 DEED DOC:$399.00

RETURN

Prepared by and return to:
Gary Fuchs/tn
Attorney at Law
McLin Burnsed
1028 Lake Sumter Landing
The Villages, FL 32162
File No.: P07618

Rec 10
Doc
Int
Total

[Space Above This Line For Recording Data]

Warranty Deed

This Warranty Deed made this **10th** day of **December, 2015** between **Elizabeth K. Miller, a single woman**, whose post office address is **290 W. Calle Montero, Sahuarita, AZ 85629**, grantor, and **The Villages of Lake-Sumter, Inc., a Florida corporation**, whose post office address is **1020 Lake Sumter Landing, The Villages, FL 32162** grantee:

(Whenever used herein the terms "grantor" and "grantee" include all the parties to this instrument and the heirs, legal representatives, and assigns of individuals, and the successors and assigns of corporations, trusts and trustees)

WITNESSETH, that said grantor, for and in consideration of the sum of TEN AND NO/100 DOLLARS ($10.00) and other good and valuable considerations to said grantor in hand paid by said grantee, the receipt whereof is hereby acknowledged, has granted, bargained, and sold to the said grantee, and grantee's heirs and assigns forever, the following described land, situate, lying and being in **Lake County, Florida** to-wit:

PARCEL ID #: 0618240300-000-11000

Lot 110, Unit 3, Orange Blossom Gardens, according to the plat thereof recorded in Plat Book 23, Pages 27 through 29, Public Records of Lake County, Florida.

Together with a 1985 SHORLINE Manufactured Home, ID# N12227A & # N12227B, Florida Title 41037285 & 41037286 bearing Real Property Decals # R224877 & # R224878 which is an Improvement to the land and an immovable fixture, and by intention of the parties and upon retirement of the Certificate of Title as provided in Florida Statutes 319.261, shall constitute a part of the realty and shall pass with it.

TOGETHER with all the tenements, hereditaments and appurtenances thereto belonging or in anywise appertaining.

TO HAVE AND TO HOLD, the same in fee simple forever.

AND the grantor hereby covenants with said grantee that the grantor is lawfully seized of said land in fee simple; that the grantor has good right and lawful authority to sell and convey said land; that the grantor hereby fully warrants the title to said land and will defend the same against the lawful claims of all persons whomsoever; and that said land is free of all encumbrances, except easements, restrictions and reservations of record, if any, and taxes accruing subsequent to December 31, 2015.

IN WITNESS WHEREOF, grantor has hereunto set grantor's hand and seal the day and year first above written.

Signed, sealed and delivered in our presence:

Teresa Norvell
Witness Name: Teresa Norvell

June Brine
Witness Name: June Brine

Elizabeth K. Miller
Elizabeth K. Miller

State of Florida
County of Lake

The foregoing instrument was acknowledged before me this 9th day of December, 2015 by Elizabeth K. Miller, a single woman, who [ ] is personally known or [X] has produced a driver's license as identification.

[Notary Seal]

TERESA NORVELL
MY COMMISSION # FF 130328
EXPIRES: June 8, 2018
Bonded Thru Budget Notary Services

Teresa Norvell
Notary Public

Printed Name:

My Commission Expires:

INSTRUMENT#: 2016012973 OR BK 4737 PG 2162 PAGES: 1 2/5/2016 8:46:58 AM
NEIL KELLY, LAKE COUNTY CLERK OF THE CIRCUIT COURT
REC FEES: $10.00 DEED DOC:$455.00

105000

RETURN

Prepared by and return to:
Gary Fuchs/sss
Attorney at Law
McLin Burnsed
1028 Lake Sumter Landing
The Villages, FL 32162
File No.: **F08192**

Ent
Rec
Doc
Int
Total

[Space Above This Line For Recording Data]

Warranty Deed

This Warranty Deed made this **27th** day of **January, 2016** between **Luigi Tortu and Theresa Tortu, husband and wife**, whose post office address is **13517 NE 86th Court, Apt 125, Lady Lake, FL 32159**, grantor, and **The Villages of Lake-Sumter, Inc., a Florida corporation**, whose post office address is **1020 Lake Sumter Landing, The Villages, FL 32162** grantee:

(Whenever used herein the terms "grantor" and "grantee" include all the parties to this instrument and the heirs, legal representatives, and assigns of individuals, and the successors and assigns of corporations, trusts and trustees)

WITNESSETH, that said grantor, for and in consideration of the sum of TEN AND NO/100 DOLLARS ($10.00) and other good and valuable considerations to said grantor in hand paid by said grantee, the receipt whereof is hereby acknowledged, has granted, bargained, and sold to the said grantee, and grantee's heirs and assigns forever, the following described land, situate, lying and being in **Lake County, Florida** to-wit:

PARCEL ID #: 0618240300-000-11100

Lot 111, ORANGE BLOSSOM GARDENS UNIT NO. 3, according to the map or plat thereof as recorded in Plat Book 23, Page 27, Public Records of Lake County, Florida.

Together with a 1984 PALM Manufactured Home, ID# 23630124AT & # 23630124BT, Florida Title 20621195 & 22532318 bearing Real Property Decals # R079979 & # R079980 which is an improvement to the land and an immovable fixture, and by intention of the parties and upon retirement of the Certificate of Title as provided in Florida Statutes 319.261, shall constitute a part of the realty and shall pass with it.

TOGETHER with all the tenements, hereditaments and appurtenances thereto belonging or in anywise appertaining.

TO HAVE AND TO HOLD, the same in fee simple forever.

AND the grantor hereby covenants with said grantee that the grantor is lawfully seized of said land in fee simple; that the grantor has good right and lawful authority to sell and convey said land; that the grantor hereby fully warrants the title to said land and will defend the same against the lawful claims of all persons whomsoever; and that said land is free of all encumbrances, except easements, restrictions and reservations of record, if any, and taxes accruing subsequent to December 31, 2015.

IN WITNESS WHEREOF, grantor has hereunto set grantor's hand and seal the day and year first above written.

Signed, sealed and delivered in our presence:

Witness Name: Rene Webster

Luigi Tortu

Luigi Tortu

Witness Name: Stacy Spears

Theresa Tortu

Theresa Tortu

State of Florida
County of Lake

The foregoing instrument was acknowledged before me this 27th day of January, 2016 by Luigi Tortu and Theresa Tortu, husband and wife, who [_] are personally known or [X] have produced a driver's license as identification.

[Notary Seal]

Notary Public

Printed Name: STACY S. SPEARS

My Commission Expires: MY COMMISSION # FF 072774 EXPIRES: December 26, 2017 Bonded Thru Budget Notary Services

INSTRUMENT#: 2016001224 OR BK 4724 PG 2074 PAGES: 1 1/6/2016 9:58:22 AM
NEIL KELLY, LAKE COUNTY CLERK OF THE CIRCUIT COURT
REC FEES: $10.00 DEED DOC:$504.00

7200C RETURN

Prepared by and return to:
Gary Fuchs/jg
Attorney at Law
McLin Burnsed
1028 Lake Sumter Landing
The Villages, FL 32162
File No.: **P08061**

Ex. N
Rec 10
Doc
Int
Total

[Space Above This Line For Recording Data]

Warranty Deed

This Warranty Deed made this **22nd** day of **December, 2015** between **Herman Guenot, a single man**, whose post office address is **11017 SE 174th Lane, Summerfield, FL 34491**, grantor, and **The Villages of Lake-Sumter, Inc., a Florida corporation**, whose post office address is **1020 Lake Sumter Landing, The Villages, FL 32162** grantee:

(Whenever used herein the terms "grantor" and "grantee" include all the parties to this instrument and the heirs, legal representatives, and assigns of individuals, and the successors and assigns of corporations, trusts and trustees)

WITNESSETH, that said grantor, for and in consideration of the sum of TEN AND NO/100 DOLLARS ($10.00) and other good and valuable considerations to said grantor in hand paid by said grantee, the receipt whereof is hereby acknowledged, has granted, bargained, and sold to the said grantee, and grantee's heirs and assigns forever, the following described land, situate, lying and being in **Lake County, Florida** to-wit:

PARCEL ID #: 0618240300-000-13100

Lot 131, Unit 3, Orange Blossom Gardens, according to the plat thereof recorded in Plat Book 23, Pages 27 through 29, Public Records of Lake County, Florida.

Together with the Manufactured Home, bearing VIN # 0261258K thereon. The Titles have been retired.

TOGETHER with all the tenements, hereditaments and appurtenances thereto belonging or in anywise appertaining.

TO HAVE AND TO HOLD, the same in fee simple forever.

AND the grantor hereby covenants with said grantee that the grantor is lawfully seized of said land in fee simple; that the grantor has good right and lawful authority to sell and convey said land; that the grantor hereby fully warrants the title to said land and will defend the same against the lawful claims of all persons whomsoever; and that said land is free of all encumbrances, except easements, restrictions and reservations of record, if any, and taxes accruing subsequent to December 31, 2015.

IN WITNESS WHEREOF, grantor has hereunto set grantor's hand and seal the day and year first above written.

Signed, sealed and delivered in our presence:

Witness Name: Jennifer Grovesteen

Witness Name: JANICE S. SCHOENFELDT

Herman Guenot

State of Florida
County of Lake

The foregoing instrument was acknowledged before me this 22nd day of December, 2015 by Herman Guenot, a single man, who [_] is personally known or [X] has produced a driver's license as identification.

[Notary Seal]

JENNIFER GROVESTEEN
MY COMMISSION # FF 907224
EXPIRES: December 5, 2019
Bonded Thru Budget Notary Services

Notary Public

Printed Name: Jennifer Grovesteen

My Commission Expires: 12/5/2019

SCALE: 1/16"=1'

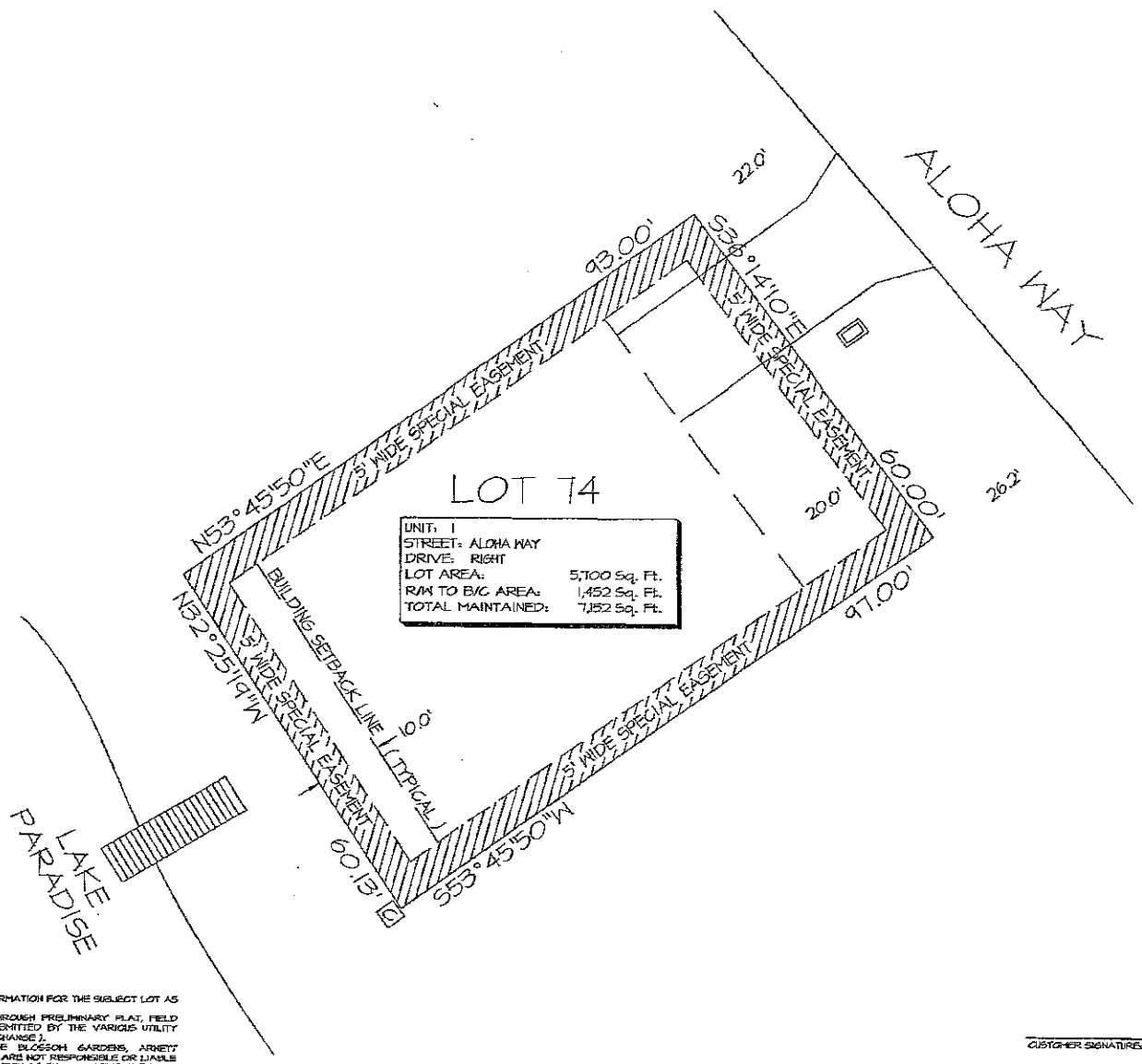

LEGEND :

- WATER METER
- IRRIGATION METER
- STREET LIGHT
- (P) INDICATES PLAT
- (M) INDICATES MEASURED
- CABLE T.V. PEDESTAL / 7" OR 9" ROUND
- TELEPHONE PEDESTAL / 4" OR 12" ROUND
- ELECTRIC PEDESTAL / 20"X20" PAD
- ELECTRIC TRANSFORMER / 3'X3' PAD
- ELECTRIC FEED THROUGH CABINET
- UTILITY VAULT
- WATER VALVE
- FIRE HYDRANT
- STORM INLET
- VALLEY GUTTER INLET
- CATCH BASIN
- MANHOLE
- LINE EXTENDER PEDESTAL / 12"X30"X14"
- TRUNK-AMP PEDESTAL / 17"X30"X14"
- SWITCH GEAR / 7' X 7'
- POWER SUPPLY / 20"X28"X58"
- BOARD / STOCKADE / P.V.C. FENCE

NOTE: EASEMENTS AND RIGHT OF WAYS IN FAVOR OF THE DEVELOPER ARE HEREBY RESERVED FOR THE CONSTRUCTION, INSTALLATION AND MAINTENANCE OF UTILITIES SUCH AS ELECTRIC LIGHT LINES, SANITARY, SEWER, STORM DRAINAGE, WATER LINES, CABLEVISION TELEPHONE, RECREATION FACILITIES AND TELEGRAPH LINES OR THE LIKE. THESE THIRD PARTY UTILITY PROVIDERS UTILIZING SUCH EASEMENT AREA COVENANT, AS A CONDITION OF THE RIGHT TO USE SUCH EASEMENT, NOT TO INTERFERE OR DISTURB SUCH EQUIPMENT INSTALLED WITHIN THE EASEMENT AREA. ALL UTILITY PROVIDERS ARE RESPONSIBLE FOR REPAIRING THE GRADING AND LANDSCAPE BEING DISTURBED PURSUANT TO ANY UTILIZATION OF SUCH EASEMENTS. HOWEVER, THESE UTILITY PROVIDERS MAY USE ABOVE GROUND JUNCTION BOXES, PEDESTALS, SPLICE BOXES AND ETC. FOR THEIR UTILITIES AND THE DEVELOPER IS WITHOUT KNOWLEDGE AS TO THE SPECIFIC LOCATION WITHIN THE EASEMENTS AND RIGHT OF WAYS THAT THESE UTILITY PROVIDERS MAY PLACE THESE ABOVE GROUND ITEMS IN THE FUTURE.

THIS IS NOT A SURVEY

THIS SKETCH IS INTENDED TO SHOW PERTINENT INFORMATION FOR THE SUBJECT LOT AS SHOWN HEREON.
THE INFORMATION SHOWN HAS BEEN OBTAINED THROUGH PRELIMINARY PLAT, FIELD MEASUREMENTS AND CONSTRUCTION PLANS AS SUBMITTED BY THE VARIOUS UTILITY COMPANIES (UTILITY LOCATIONS ARE SUBJECT TO CHANGE).
THE VILLAGES OF LAKE-SUMTER, INC. ORANGE BLOSSOM GARDENS, ARNETT ENVIRONMENTAL AND/OR ANY AFFILIATES THEREOF ARE NOT RESPONSIBLE OR LIABLE FOR ACCURACY OR CORRECTNESS OF THE INFORMATION AS SHOWN ON THIS SKETCH.

CUSTOMER SIGNATURE: _____ DATE: _____

CUSTOMER SIGNATURE: _____ DATE: _____

The Villages

Arnett Environmental, LLC
1004 Lake Sumter Landing The Villages, FL 32162
Tel No. (352)753-4717 Fax No. (352)750-2284
Certificate of Authorization Number: 27485

SCALE: 1/16"=1'

LAKE PARADISE

N50°51'35"E (M)
42.07' (M)
N51°00'00"E (P)
42.00' (P)

5' WIDE SPECIAL EASEMENT

BUILDING SETBACK LINE (TYPICAL)

10.0'

S59°51'47"E
S59°52'10"E

5' WIDE SPECIAL EASEMENT

7' WIDE
5' HIGH
HEDGE ROW

C1
ARC=18.21' (P)
ARC=18.29' (M)

93.20' (M)
93.81' (P)

LOT 194*

UNIT:	3JB
STREET:	ALOHA WAY
DRIVE:	RIGHT
LOT AREA:	5,329 Sq. Ft.
R/W TO B/C AREA:	989 Sq. Ft.
TOTAL MAINTAINED:	6,318 Sq. Ft.

N39°00'00"W
N39°00'00"W

5' WIDE SPECIAL EASEMENT

90.00' (P)
90.01' (M)

5' WIDE SPECIAL EASEMENT

57.25' (P)
57.38' (M)

36" CAMPHOR

30" PALM

S51°00'00"W
S51°18'06"W

ALOHA WAY

LEGEND :

- WATER METER
- IRRIGATION METER
- STREET LIGHT
- (P) INDICATES PLAT
- (M) INDICATES MEASURED
- CABLE T.V. PEDESTAL / 7" OR 9" ROUND
- TELEPHONE PEDESTAL / 4" OR 12" ROUND
- ELECTRIC PEDESTAL / 20"X20" PAD
- ELECTRIC TRANSFORMER / 5'X3' PAD
- ELECTRIC FEED THROUGH CABINET
- UTILITY VAULT
- WATER VALVE
- FIRE HYDRANT
- STORM INLET
- VALLEY GUTTER INLET
- CATCH BASIN
- MANHOLE
- LINE EXTENDER PEDESTAL / 12"X30"X14"
- TRUNK-AMP PEDESTAL / 17"X30"X14"
- SWITCH GEAR / 7' X 7'
- POWER SUPPLY / 20"X28"X58"
- BOARD / STOCKADE / PVC FENCE

NOTE: EASEMENTS AND RIGHT OF WAYS IN FAVOR OF THE DEVELOPER ARE HEREBY RESERVED FOR THE CONSTRUCTION, INSTALLATION AND MAINTENANCE OF UTILITIES SUCH AS ELECTRIC LIGHT LINES, SANITARY, SEWER, STORM DRAINAGE, WATER LINES, CABLEVISION, TELEPHONE, RECREATION FACILITIES AND TELEGRAPH LINES OR THE LIKE. THESE THIRD PARTY UTILITY PROVIDERS UTILIZING SUCH EASEMENT AREA COVENANT, AS A CONDITION OF THE RIGHT TO USE SUCH EASEMENT, NOT TO INTERFERE OR DISTURB SUCH EQUIPMENT INSTALLED WITHIN THE EASEMENT AREA. ALL UTILITY PROVIDERS ARE RESPONSIBLE FOR REPAIRING THE GRADING AND LANDSCAPE BEING DISTURBED PURSUANT TO ANY UTILIZATION OF SUCH EASEMENTS. HOWEVER, THESE UTILITY PROVIDERS MAY USE ABOVE GROUND JUNCTION BOXES, PEDESTALS, SPLICE BOXES AND ETC. FOR THEIR UTILITIES AND THE DEVELOPER IS WITHOUT KNOWLEDGE AS TO THE SPECIFIC LOCATION WITHIN THE EASEMENTS AND RIGHT OF WAYS THAT THESE UTILITY PROVIDERS MAY PLACE THESE ABOVE GROUND ITEMS IN THE FUTURE.

* SPECIAL FLOOR PLAN HOME SITE

THIS IS NOT A SURVEY

THIS SKETCH IS INTENDED TO SHOW PERTINENT INFORMATION FOR THE SUBJECT LOT AS SHOWN HEREON.
THE INFORMATION SHOWN HAS BEEN OBTAINED THROUGH PRELIMINARY PLAT, FIELD MEASUREMENTS AND CONSTRUCTION PLANS AS SUBMITTED BY THE VARIOUS UTILITY COMPANIES (UTILITY LOCATIONS ARE SUBJECT TO CHANGE).
THE VILLAGES OF LAKE-SUMTER, INC. ORANGE BLOSSOM GARDENS, ARNETT ENVIRONMENTAL AND/OR ANY AFFILIATES THEREOF ARE NOT RESPONSIBLE OR LIABLE FOR ACCURACY OR CORRECTNESS OF THE INFORMATION AS SHOWN ON THIS SKETCH.

CUSTOMER SIGNATURE: DATE:

CUSTOMER SIGNATURE: DATE:

The Villages

Arnett Environmental, LLC

SCALE: 1/16"=1'

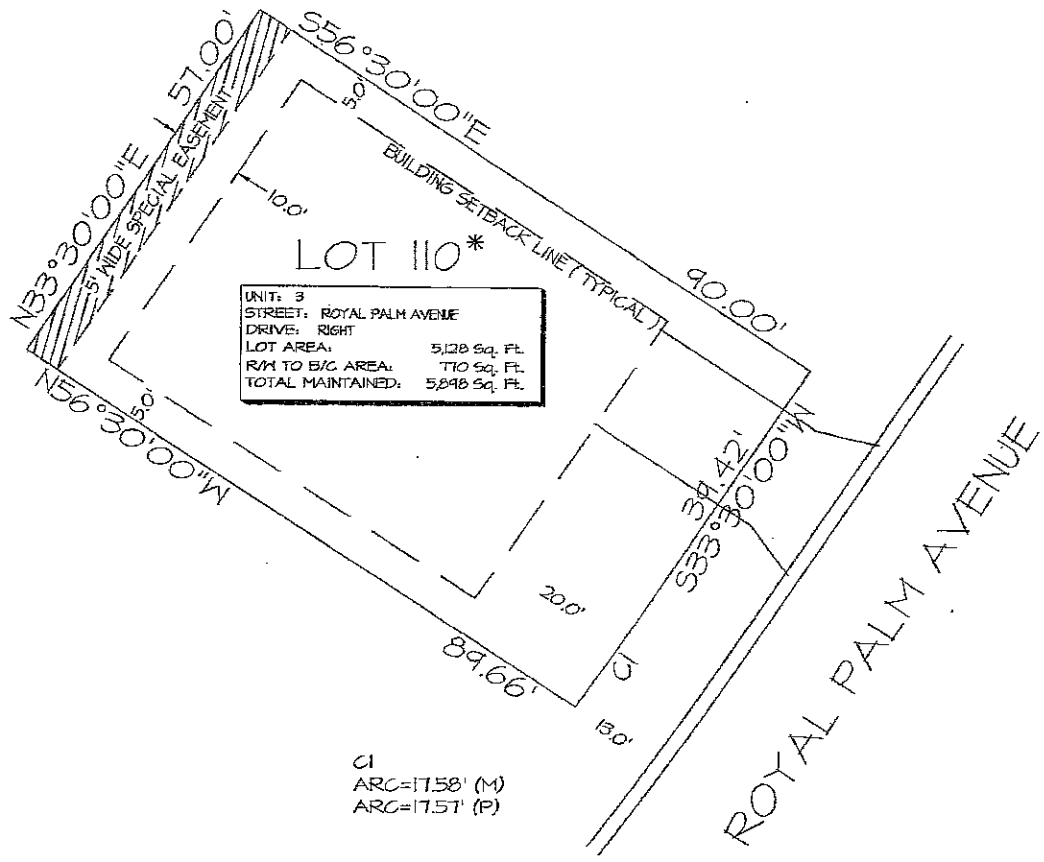

LEGEND

- WATER METER
- IRRIGATION METER
- STREET LIGHT
- (P) INDICATES PLAT
- (M) INDICATES MEASURED
- CABLE T.V. PEDESTAL / 7" OR 9" ROUND
- TELEPHONE PEDESTAL / 4" OR 12" ROUND
- ELECTRIC PEDESTAL / 20"X20" PAD
- ELECTRIC TRANSFORMER / 8'X8' PAD
- ELECTRIC FEED THROUGH CABINET
- UTILITY VAULT
- WATER VALVE
- FIRE HYDRANT
- STORM INLET
- VALLEY GUTTER INLET
- CATCH BASIN
- MANHOLE
- LINE EXTENDER PEDESTAL / 12"X30"X14"
- TRUNK-AMP PEDESTAL / 17"X30"X14"
- SWITCH GEAR / 7' X 7'
- POWER SUPPLY / 20"X28"X58"
- BOARD / STOCKADE / PVC FENCE

NOTE: EASEMENTS AND RIGHT OF WAYS IN FAVOR OF THE DEVELOPER ARE HEREBY RESERVED FOR THE CONSTRUCTION, INSTALLATION AND MAINTENANCE OF UTILITIES SUCH AS ELECTRIC LIGHT LINES, SANITARY, SEWER, STORM DRAINAGE, WATER LINES, CABLEVISION TELEPHONE, RECREATION FACILITIES AND TELEGRAPH LINES OR THE LIKE. THESE THIRD PARTY UTILITY PROVIDERS UTILIZING SUCH EASEMENT AREA COVENANT, AS A CONDITION OF THE RIGHT TO USE SUCH EASEMENT, NOT TO INTERFERE OR DISTURB SUCH EQUIPMENT INSTALLED WITHIN THE EASEMENT AREA. ALL UTILITY PROVIDERS ARE RESPONSIBLE FOR REPAIRING THE GRADING AND LANDSCAPE BEING DISTURBED PURSUANT TO ANY UTILIZATION OF SUCH EASEMENTS. HOWEVER, THESE UTILITY PROVIDERS MAY USE ABOVE GROUND JUNCTION BOXES, PEDESTALS, SPLICE BOXES AND ETC. FOR THEIR UTILITIES AND THE DEVELOPER IS WITHOUT KNOWLEDGE AS TO THE SPECIFIC LOCATION WITHIN THE EASEMENTS AND RIGHT OF WAYS THAT THESE UTILITY PROVIDERS MAY PLACE THESE ABOVE GROUND ITEMS IN THE FUTURE.

* SPECIAL FLOOR PLAN HOME SITE

THIS IS NOT A SURVEY

THIS SKETCH IS INTENDED TO SHOW PERTINENT INFORMATION FOR THE SUBJECT LOT AS SHOWN HEREON.
THE INFORMATION SHOWN HAS BEEN OBTAINED THROUGH PRELIMINARY PLAT, FIELD MEASUREMENTS AND CONSTRUCTION PLANS AS SUBMITTED BY THE VARIOUS UTILITY COMPANIES (UTILITY LOCATIONS ARE SUBJECT TO CHANGE).
THE VILLAGES OF LAKE-SUMTER, INC. ORANGE BLOSSOM GARDENS, ARNETT ENVIRONMENTAL AND/OR ANY AFFILIATES THEREOF ARE NOT RESPONSIBLE OR LIABLE FOR ACCURACY OR CORRECTNESS OF THE INFORMATION AS SHOWN ON THIS SKETCH.

CUSTOMER SIGNATURE: _____ DATE: _____

CUSTOMER SIGNATURE: _____ DATE: _____

The Villages

Arnett Environmental, LLC

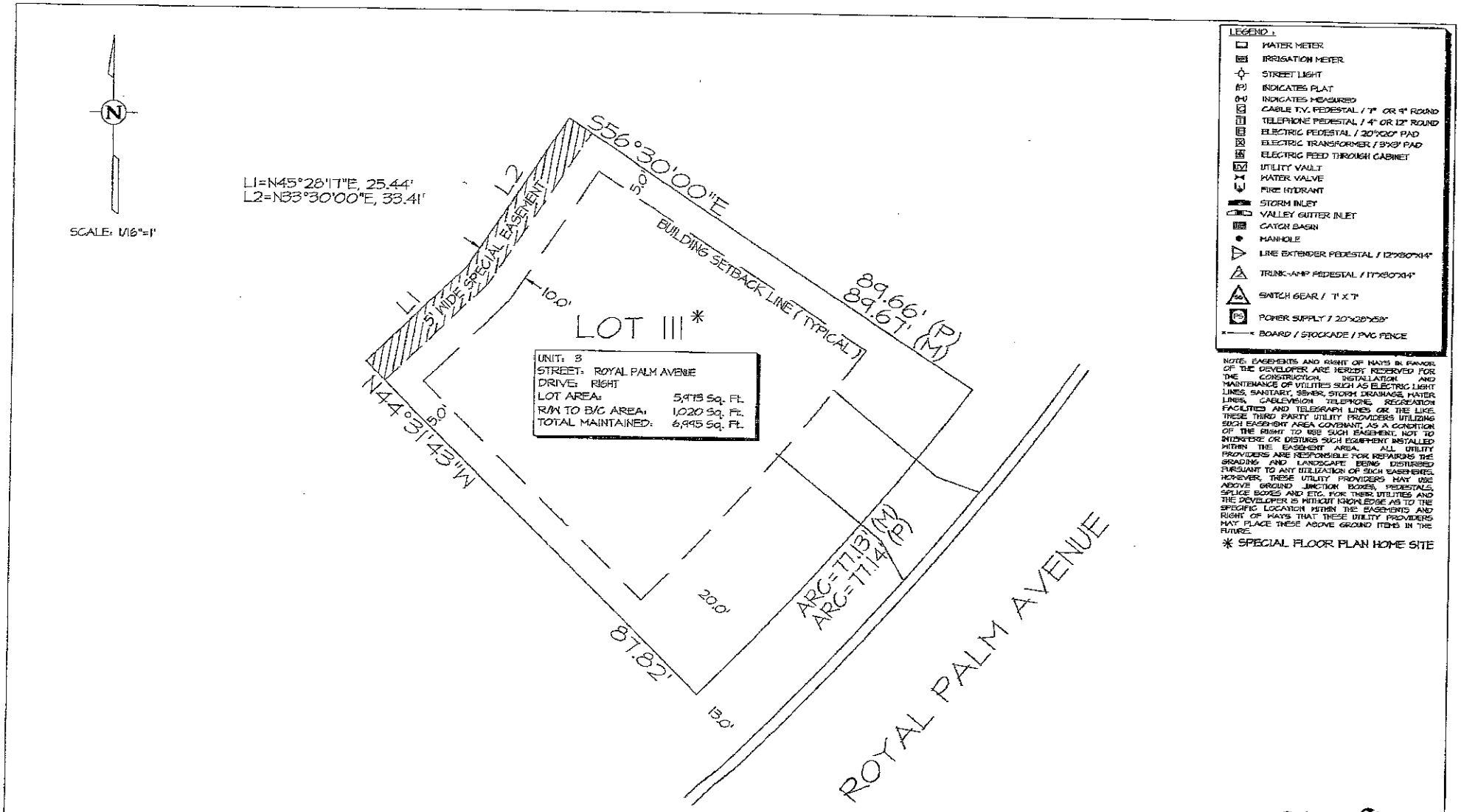
N
SCALE: 1/16"=1'
L1=N45°28'17"E, 25.44'
L2=N33°30'00"E, 33.41'
L1
L2
5' WIDE SPECIAL EASEMENT
S56°30'00"E
5.0'
BUILDING SETBACK LINE (TYPICAL)
89.66' (P)
89.67' (M)
10.0'
LOT III*
UNIT: 3
STREET: ROYAL PALM AVENUE
DRIVE: RIGHT
LOT AREA: 5,975 Sq. Ft.
R/W TO B/C AREA: 1,020 Sq. Ft.
TOTAL MAINTAINED: 6,995 Sq. Ft.
N44°31'43"W
5.0'
20.0'
ARC=77.13' (M)
ARC=77.14' (P)
87.82'
15.0'
ROYAL PALM AVENUE
LEGEND :
WATER METER
IRRIGATION METER
STREET LIGHT
(P) INDICATES PLAT
(M) INDICATES MEASURED
CABLE T.V. PEDESTAL / 7" OR 9" ROUND
TELEPHONE PEDESTAL / 4" OR 12" ROUND
ELECTRIC PEDESTAL / 20"X20" PAD
ELECTRIC TRANSFORMER / 3'X3' PAD
ELECTRIC FEED THROUGH CABINET
UTILITY VAULT
WATER VALVE
FIRE HYDRANT
STORM INLET
VALLEY GUTTER INLET
CATCH BASIN
MANHOLE
LINE EXTENDER PEDESTAL / 12"X30"X14"
TRUNK-AMP PEDESTAL / 17"X30"X14"
SWITCH GEAR / 7' X 7'
POWER SUPPLY / 20"X28"X58"
BOARD / STOCKADE / PVC FENCE
NOTE: EASEMENTS AND RIGHT OF WAYS IN FAVOR OF THE DEVELOPER ARE HEREBY RESERVED FOR THE CONSTRUCTION, INSTALLATION AND MAINTENANCE OF UTILITIES SUCH AS ELECTRIC LIGHT LINES, SANITARY, SEWER, STORM DRAINAGE, WATER LINES, CABLEVISION TELEPHONE, RECREATION FACILITIES AND TELEGRAPH LINES OR THE LIKE. THESE THIRD PARTY UTILITY PROVIDERS UTILIZING SUCH EASEMENT AREA COVENANT, AS A CONDITION OF THE RIGHT TO USE SUCH EASEMENT, NOT TO INTERFERE OR DISTURB SUCH EQUIPMENT INSTALLED WITHIN THE EASEMENT AREA. ALL UTILITY PROVIDERS ARE RESPONSIBLE FOR REPAIRING THE GRADING AND LANDSCAPE BEING DISTURBED PURSUANT TO ANY UTILIZATION OF SUCH EASEMENTS. HOWEVER, THESE UTILITY PROVIDERS MAY USE ABOVE GROUND JUNCTION BOXES, PEDESTALS, SPLICE BOXES AND ETC. FOR THEIR UTILITIES AND THE DEVELOPER IS WITHOUT KNOWLEDGE AS TO THE SPECIFIC LOCATION WITHIN THE EASEMENTS AND RIGHT OF WAYS THAT THESE UTILITY PROVIDERS MAY PLACE THESE ABOVE GROUND ITEMS IN THE FUTURE.
* SPECIAL FLOOR PLAN HOME SITE
THIS IS NOT A SURVEY
THIS SKETCH IS INTENDED TO SHOW PERTINENT INFORMATION FOR THE SUBJECT LOT AS SHOWN HEREON.
THE INFORMATION SHOWN HAS BEEN OBTAINED THROUGH PRELIMINARY PLAT, FIELD MEASUREMENTS AND CONSTRUCTION PLANS AS SUBMITTED BY THE VARIOUS UTILITY COMPANIES (UTILITY LOCATIONS ARE SUBJECT TO CHANGE).
THE VILLAGES OF LAKE-SUMTER, INC. ORANGE BLOSSOM GARDENS, ARNETT ENVIRONMENTAL AND/OR ANY AFFILIATES THEREOF ARE NOT RESPONSIBLE OR LIABLE FOR ACCURACY OR CORRECTNESS OF THE INFORMATION AS SHOWN ON THIS SKETCH.
CUSTOMER SIGNATURE: DATE:
CUSTOMER SIGNATURE: DATE:
The Villages
Arnett Environmental, LLC

SCALE: 1/16"=1'

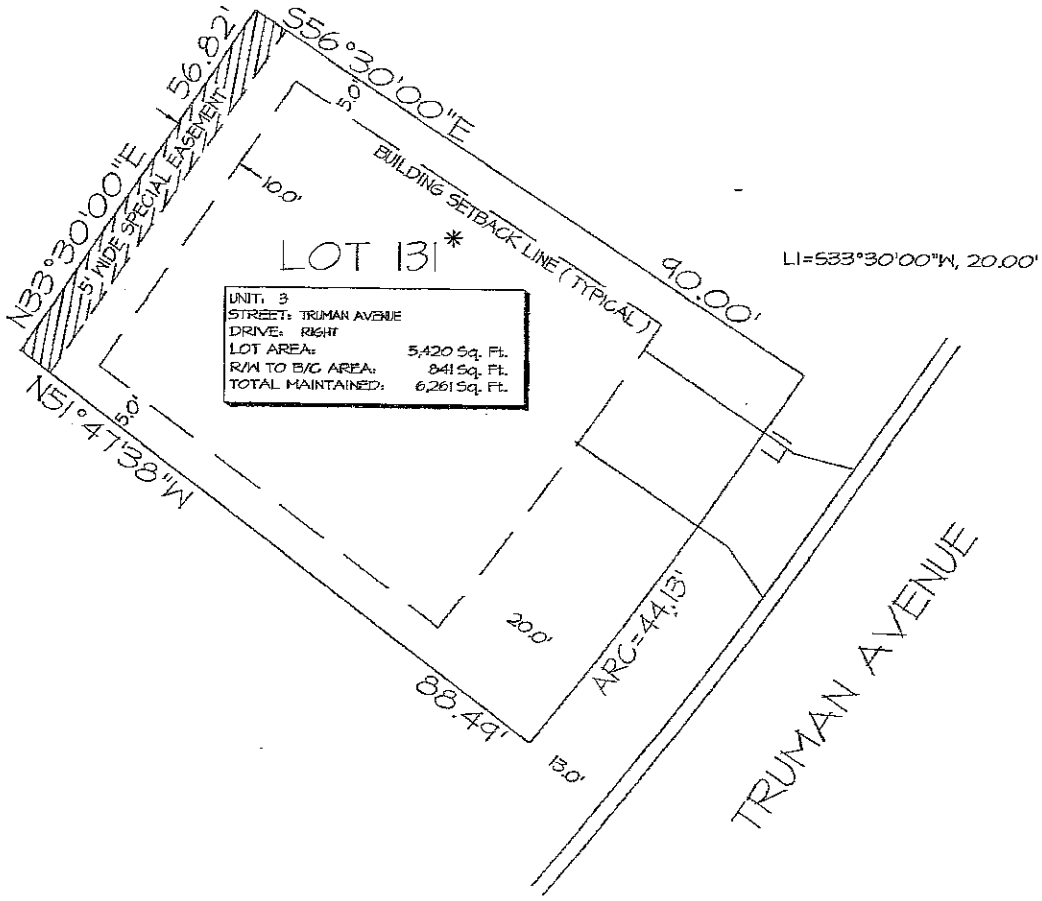

UNIT:	3
STREET:	TRUMAN AVENUE
DRIVE:	RIGHT
LOT AREA:	5,420 Sq. Ft.
R/W TO B/C AREA:	841 Sq. Ft.
TOTAL MAINTAINED:	6,261 Sq. Ft.

LEGEND :

- WATER METER
- IRRIGATION METER
- STREET LIGHT
- (P) INDICATES PLAT
- (M) INDICATES MEASURED
- CABLE T.V. PEDESTAL / 7" OR 9" ROUND
- TELEPHONE PEDESTAL / 4" OR 12" ROUND
- ELECTRIC PEDESTAL / 20"X20" PAD
- ELECTRIC TRANSFORMER / 3X3' PAD
- ELECTRIC FEED THROUGH CABINET
- UTILITY VAULT
- WATER VALVE
- FIRE HYDRANT
- STORM INLET
- VALLEY GUTTER INLET
- CATCH BASIN
- MANHOLE
- LINE EXTENDER PEDESTAL / 12"X30"X14"
- TRUNK-AMP PEDESTAL / 17"X30"X14"
- SWITCH GEAR / T X T
- POWER SUPPLY / 20"x28"x58"
- BOARD / STOCKADE / PVC FENCE

NOTE: EASEMENTS AND RIGHT OF WAYS IN FAVOR OF THE DEVELOPER ARE HEREBY RESERVED FOR THE CONSTRUCTION, INSTALLATION AND MAINTENANCE OF UTILITIES SUCH AS ELECTRIC LIGHT LINES, SANITARY, SEWER, STORM DRAINAGE, WATER LINES, CABLEVISION TELEPHONE RECREATION FACILITIES AND TELEGRAPH LINES OR THE LIKE. THESE THIRD PARTY UTILITY PROVIDERS UTILIZING SUCH EASEMENT AREA COVENANT, AS A CONDITION OF THE RIGHT TO USE SUCH EASEMENT, NOT TO INTERFERE OR DISTURB SUCH EQUIPMENT INSTALLED WITHIN THE EASEMENT AREA. ALL UTILITY PROVIDERS ARE RESPONSIBLE FOR REPAIRING THE GRADING AND LANDSCAPE BEDS DISTURBED PURSUANT TO ANY UTILIZATION OF SUCH EASEMENTS. HOWEVER, THESE UTILITY PROVIDERS MAY USE ABOVE GROUND JUNCTION BOXES, PEDESTALS, SPLICE BOXES AND ETC. FOR THEIR UTILITIES AND THE DEVELOPER IS WITHOUT KNOWLEDGE AS TO THE SPECIFIC LOCATION WITHIN THE EASEMENTS AND RIGHT OF WAYS THAT THESE UTILITY PROVIDERS MAY PLACE THESE ABOVE GROUND ITEMS IN THE FUTURE.

* SPECIAL FLOOR PLAN HOME SITE

THIS IS NOT A SURVEY

THIS SKETCH IS INTENDED TO SHOW PERTINENT INFORMATION FOR THE SUBJECT LOT AS SHOWN HEREON.
THE INFORMATION SHOWN HAS BEEN OBTAINED THROUGH PRELIMINARY PLAT, FIELD MEASUREMENTS AND CONSTRUCTION PLANS AS SUBMITTED BY THE VARIOUS UTILITY COMPANIES (UTILITY LOCATIONS ARE SUBJECT TO CHANGE).
THE VILLAGES OF LAKE-SUMTER, INC, ORANGE BLOSSOM GARDENS, ARNETT ENVIRONMENTAL AND/OR ANY AFFILIATES THEREOF ARE NOT RESPONSIBLE OR LIABLE FOR ACCURACY OR CORRECTNESS OF THE INFORMATION AS SHOWN ON THIS SKETCH.

CUSTOMER SIGNATURE: DATE:

CUSTOMER SIGNATURE: DATE:

The Villages

Arnett Environmental, LLC

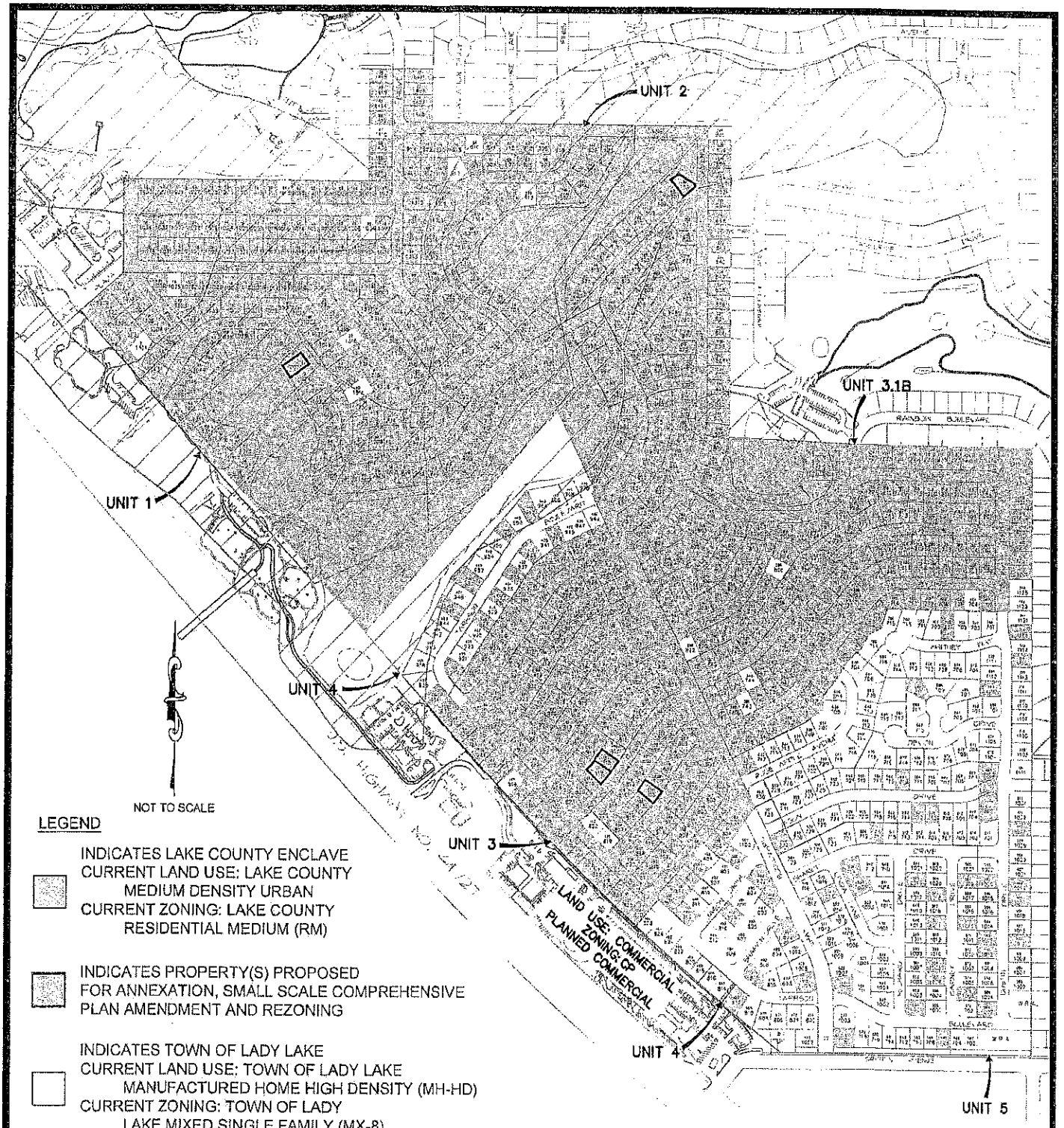

LEGEND

INDICATES LAKE COUNTY ENCLAVE
CURRENT LAND USE: LAKE COUNTY
MEDIUM DENSITY URBAN
CURRENT ZONING: LAKE COUNTY
RESIDENTIAL MEDIUM (RM)

INDICATES PROPERTY(S) PROPOSED
FOR ANNEXATION, SMALL SCALE COMPREHENSIVE
PLAN AMENDMENT AND REZONING

INDICATES TOWN OF LADY LAKE
CURRENT LAND USE: TOWN OF LADY LAKE
MANUFACTURED HOME HIGH DENSITY (MH-HD)
CURRENT ZONING: TOWN OF LADY
LAKE MIXED SINGLE FAMILY (MX-8)

FLOOD ZONE
MAP# 12069C0154E
PANEL 154 OF 750 (REVISED 12-18-12)

10 —— LOT NUMBER
100 —— 911 NUMBER

PROPOSED
ORANGE BLOSSOM GARDENS PROPERTIES
FOR
ANNEXATION, SMALL SCALE COMPREHENSIVE PLAN AMENDMENT AND REZONING

FEBRUARY 29, 2016

Arnett
Environmental, LLC
1038 Lake Sumter Landing The Villages, FL 33162
Tel No (352)753-4747 Fax No. (352)753-1298
Certificate of Authorization Number: 27495

List No.	UNIT	LOT	HOUSE NO.	ADDRESS	ALT KEY NO.	PLAT BOOK/PAGE
1	OBG1	74		1026 Aloha Way	1482461	18/9
2	OBG3-1B	194		803 Aloha Way	2717963	25/33
3	OBG3	110		815 Royal Palm Avenue	2717831	23/27-29
4	OBG3	111		817 Royal Palm Avenue	2665947	23/27-29
5	OBG3	131		811 Truman Avenue	1483921	23/27-29

Print Form

TOWN OF LADY LAKE
APPLICATION FOR CONCURRENCY DETERMINATION

1. Purpose for Concurrency Determination: (check one)

   X Comprehensive Plan Land Use Amendment — X Rezoning
   ___ Preliminary/Final Subdivision Approval — ___ Site Plan Approval
   ___ Other

2. Applicant: Martin L. Dzuro, V.P. of The Villages of Lake-Sumter Inc.
   Address: 1045 Lake Sumter Landing, The Villages, FL 32162
   Telephone: (352) 753-6262 E-Mail: marty.dzuro@thevillages.com

3. Owner: The Villages of Lake-Sumter Inc./John and Patricia Porto/Patricia A. Barsness
   Address: 1020 Lake Sumter Ldg, The Villages,FL 32162/500 Elm St , New Haven, CT 06473 /803 Aloha Way Lady Lake, FL 32159
   Telephone: See above. E-Mail: See above.

4. Property Address: See attached list.

5. Alt. Key #: See attached list. 6. Total Acreage: Approx. 0.64 acres

7. Existing Zoning: RM - Residential Medium 8. Proposed Zoning: MX-8 Mixed SF

9. Existing Land Use: Med. Density Urban 10. Proposed Land Use: MH-HD

11. Residential Lots/Units: 5 Lots 12. Non-Resident, Gross Sq. Ft.: _____

13. Method of Wastewater Treatment: N/A See attached sheet.
    a. Septic Tank: _____ b. Central Sewer: _____ c. Other: _____
    County Permit: _____ County #: _____

14. Wastewater Flow Rates:* N/A See attached sheet.
    ERU Determination Per Chapter 14, Appendix A-A: _____ ERUS x 250 = _____ GPD

15. Water Usage:* N/A See attached sheet.
    ERU Determination Per Chapter 14, Appendix A-A: _____ ERUS x 250 = _____ GPD

16. Solid Waste: (3.39 pounds per capita, per day): N/A See attached sheet. Pounds

17. Traffic Analysis: Name and Functional Classification of roadways adjacent to the property, the Average Daily Trip Generation and Average Daily Peak Hour Generation expected from this development (please refer to the Lake-Sumter MPO Traffic Analysis Guideline):
    N/A See attached sheet.

18. Population (residential only) 1.86 persons per household: N/A See attached sheet. Persons

19. Recreation (residential only) 4 acres per 1,000 residents: N/A See attached sheet. Acres

Signature of Engineer: _____ Date: 2/24/14

* If circumstances apply where additional Water or Wastewater Capacity beyond minimum ERU based GPD is requested, please provide a justification letter with supporting calculations and documentation. At no time will the Town reduce Water or Wastewater Capacity request below the minimum ERU based GPD.

List No.	UNIT	LOT	HOUSE NO.	ADDRESS	ALT KEY NO.	PLAT BOOK/PAGE
1	OBG1	74		1026 Aloha Way	1482461	18/9
2	OBG3-1B	194		803 Aloha Way	2717963	25/33
3	OBG3	110		815 Royal Palm Avenue	2717831	23/27-29
4	OBG3	111		817 Royal Palm Avenue	2665947	23/27-29
5	OBG3	131		811 Truman Avenue	1483921	23/27-29

Parcel ID #: 06-18-24-0100-0000-7400
Lot 74, Unit 1, Orange Blossom Gardens, according to the plat thereof recorded in Plat Book 18, Page 9, Public Records of Lake County, Florida.

Parcel ID #: 06-18-24-0350-000-19400
Lot 194, Unit 3-1B, Orange Blossom Gardens, according to the plat thereof recorded in Plat Book 25, Page 33, Public Records of Lake County, Florida.

Parcel ID #: 06-18-24-0300-000-11000
Lot 110, Unit 3, Orange Blossom Gardens, according to the plat thereof recorded in Plat Book 23, Pages 27 through 29, Public Records of Lake County, Florida.

Parcel ID #: 06-18-24-0300-000-11100
Lot 111, Unit 3, Orange Blossom Gardens, according to the plat thereof recorded in Plat Book 23, Pages 27 through 29, Public Records of Lake County, Florida.

-AND-

Parcel ID #: 06-18-24-0300-000-13100
Lot 131, Unit 3, Orange Blossom Gardens, according to the plat thereof recorded in Plat Book 23, Pages 27 through 29, Public Records of Lake County, Florida.

Concurrency Determination Statement

The proposed Small Scale Comprehensive Plan Amendment is a land use change from Lake County Medium Density Urban to Town of Lady Lake Manufactured Home High Density to accommodate the Annexation of three (3) lots in a historic section of The Villages known as Orange Blossom Gardens, an age restricted retirement community. The Villages is proposing to remove the existing manufactured home on each lot and construct a similar size conventional built home. There will be no increase in services, traffic, population, or recreation use.

Impact on Town Services

Potable Water

- No impact, lots are served by The Village Center Community Development District Central Water System.

Sewer

- No impact, lots are served by The Village Center Community Development District Central Sewer System.

Schools

- Not factored for project – no foreseen impact of students as the project is located within an active adult retirement community.

Transportation

- No impact, the existing home will be replaced with a new home. There will be no change in average daily trip generation.

Parks and Recreation

- The annexation, small scale future land use amendment, and the rezoning applications will not cause P&R Level of Service to be exceeded since the project is for the replacement of existing homes. Additionally, The Villages provides its residents with all Park and Recreation Amenities.

Stormwater

- Project will be required to adhere to any applicable SJRWMD guidelines and Town of Lady Lake Floodplain Management Ordinance for parcels within Special Flood Hazard Areas.

PLANNING & ZONING BOARD AGENDA ITEM

REQUESTED BOARD MEETING DATE: April 11, 2016

SUBJECT: **Ordinance 2016-12 —Small Scale Future Land Use Comprehensive Plan Amendment from Lake County Medium Urban Density to Lady Lake Manufactured Home High Density for 5 lots consisting of approximately 0.64 +/- acres of land, owned by The Villages of Lake-Sumter, Inc., John and Patricia Porto, and Pamela A. Barsness, which are located within Orange Blossom Gardens Units 1, 3, and 3.1B, Referenced by Alternate Keys 1482461, 2717963, 2717831, 2665947, 1483921.**

DEPARTMENT: **GROWTH MANAGEMENT**

STAFF RECOMMENDED MOTIONS:

1. **Motion to forward Ordinance No. 2016-12, a Small Scale Comprehensive Plan Amendment – Requesting to Change approximately 0.64 +/- acres of land from Lake County Medium Urban Density to Lady Lake Manufactured Home High Density to the Town Commission with the recommendation of approval.**

2. **Motion to forward Ordinance No. 2016-12, a Small Scale Comprehensive Plan Amendment – Requesting to Change approximately 0.64 +/- acres of land from Lake County Medium Urban Density to Lady Lake Manufactured Home High Density to the Town Commission with the recommendation of denial.**

Staff is in support of Motion Number 1

Applicant, Martin L. Dzuro, on behalf of the Villages of Lake-Sumter, Inc., John and Patricia Porto, and Pamela A. Barsness, has filed applications to amend the future land use comprehensive plan for properties consisting of 5 Lots located north of Griffin Avenue and northeast of North Highway 27/441 within the Orange Blossom Garden Subdivisions Units 1, 3, and 3.1B. The application involves 0.64 +/- acres of property from unincorporated Lake County into the Town of Lady Lake. The proposed properties are as follows:

- 1026 Aloha Way
- 803 Aloha Way
- 811 Truman Avenue
- 815 Royal Palm Avenue
- 817 Royal Palm Avenue

The Small Scale Future Land Use Map Amendment application was received on Monday, February 29, 2016, and has been reviewed and determined to be complete satisfying the necessary criteria as required to meet the requirements of the Land Development Regulations (LDRs) as well as the adopted Comprehensive Plan, and is ready for transmittal to the Town Commission.

Notices to inform the surrounding property owners (70) within 150' of the property of the proposed annexation were mailed on Thursday, March 24, 2016. The properties were also posted Thursday, March 24, 2016.

Concurrency Determination Statement

The Villages has removed existing manufactured homes on three (3) of the lots in a historic section of the Villages known as Orange Blossom Gardens to construct a similar size conventional built home on each lot (the two homes on Aloha Way have yet to be removed). There will be no increase in utility services, traffic, population, or recreation use.

Impact on Town Services

Potable Water-

- No impact, lots are served by the Village Center Community Development District Central Water System.

Sewer -

- No impact, lots are served by the Village Center Community Development District Central Sewer System.

Schools –

- Not factored for project – no foreseen impact of students as the project is located within an active adult retirement community.

Transportation –

- No impact, the existing home will be replaced with a new home. There will be no change in average daily trip generation.

Parks & Recreation –

- The small scale future land use amendment will not cause P&R Level of Service to be exceeded since the project is for the replacement of existing homes. Additionally, the Villages provides its residents with all Park and Recreation Amenities.

Stormwater –

- Project will be required to adhere to SJRWMD guidelines and of Town of Lady Lake Floodplain Management Ordinance for parcels within Special Flood Hazard Areas.

Applications have been reviewed and determined to be complete. The applicant has submitted all appropriate material in compliance with the Land Development Regulations (LDRs) and the application is ready for transmittal to the Town Commission. Additionally, the applications were reviewed and determined to be in compliance with the directives of the adopted Comprehensive Plan in accordance with the sought designation. A Concurrency Determination Statement has also been included as part of the Small Scale Comprehensive Plan Amendment Application, which the applicant submitted to explain expected impacts on Town Services.

The subject properties involve approximately 0.64 ± acres lie in Section 06, Township 18 South, Range 24 East in Lake County, Florida. The Future Land Use of the adjacent properties is as follows:

Future Land Use

Subject Properties	Lake County Medium Urban Density
Future Land Use of Adjacent Properties	
West	Lake County Medium Urban Density
East	Lake County – Medium Urban Density
North	Lake County Medium Urban Density
South	Lake County Medium Urban Density

Comments:

1.) Annexation and Rezoning Applications have been submitted concurrently with this Small Scale Future Land Use Amendment Application.

2.) In accordance to the Interlocal Agreement for Building Permits & Inspections Section 2).A)., executed on June 23, 2015, if the Villages has applied for annexation, then the Town can issue building permits located within the unincorporated area.

3.) Project will be required to adhere to St. John's River Water Management District guidelines and the Town of Lady Lake Floodplain Management Ordinance for parcels within Special Flood Hazard Areas.

Past Actions:

The **Technical Review Committee (TRC)** members individually reviewed application for Ordinance 2016-12, and determined the application to be complete and ready for transmittal to the P&Z Board.

Public Hearings

The **Local Planning Agency** is scheduled to consider Ordinance 2016-12 on Monday, May 2, 2016, at 5:30 p.m.

The **Town Commission** is scheduled to consider Ordinance 2016-12 for first reading on Monday, May 2, 2016 at 6:00 p.m. The second and final reading will be held on Monday, May 16, 2016 at 6:00 p.m.

FISCAL IMPACT: $_____

[ ] Capital Budget **[ ] Operating** **[ ] Other**

ATTACHMENTS: **[X] Ordinance(s)** **[ ] Resolution** **[ ] Budget Resolution**

[ ] Other

[ ] Support Documents/Contracts Available for Review in Manager's Office

---

DEPARTMENT HEAD	**Submitted** 4/5/16	**Date**
FINANCE DEPARTMENT	**Approved as to Budget Requirements**	**Date**
TOWN ATTORNEY	**Approved as to Form and Legality**	**Date**
TOWN MANAGER	**Approved Agenda Item for:** 4/11/16	**Date** 4/5/16

4/5/2016

BOARD ACTION: **[✓] Approved as Recommended** **[ ] Disapproved**
MCKENZIE/CHIASSON 3-0

[ ] Tabled Indefinitely **[ ] Continued to Date Certain**

[ ] Approved with Modification

cc: THAD. G.M.

Mr. Wilcox stated The Villages are building houses in various locations and, because of this, he fears a percentage of homeowners will be forced to annex.

Growth Management Director, Thad Carroll, stated the position of the Town of Lady Lake is to not force annexation of property. These applications have been voluntary; the property owners requested to come into the Town for various reasons, in this case to pull the building permits from the Town. Because the Lake County offices are located in Tavares, it is easier for them to deal with the Town and its building codes. The Town does not provide water or sewer services to these properties.

- Mr. Wilcox questioned if there are any scenarios where he would be forced to annex and, if so, would he need to comply with the Town's ordinances or The Villages'.

Mr. Carroll stated these are two separate issues. If you live in The Villages, you need to comply with The Villages' Home Owner's Association, which is a separate set of restrictions. The Town's code is followed unless the case is more stringent, then The Villages' code must be followed. Mr. Carroll stated that would be a civil matter between the homeowner and the Home Owner's Association.

- Mr. Wilcox stated his desire to build a two-story home, and has been denied by The Villages', and stated this would be acceptable in the Town.

Mr. Carroll stated that is part of the agreement that homeowners enter into with the Villages, and the Town does not interfere with those issues.

Hearing no further comments, Chairperson Gauder asked for a motion from the board.

Upon a motion by Member Chiasson and a second by Member McKenzie, the Planning and Zoning Board recommended transmittal and approval of Ordinance No. 2016-11 to the Town Commission for consideration by the following roll call vote:

MCKENZIE	***YES***
CHIASSON	***YES***
GAUDER	***YES***

3. Ordinance No. 2016-12 – Small Scale Future Land Use Comprehensive Plan Amendment – The Villages of Lake-Sumter, Inc., John and Patricia Porto, and Pamela A. Barsness – Changing from Lake County Medium Urban Density to Lady Lake Manufactured Home High Density – Property Being 0.64 +/- Acres of Land (Alternate Keys 1482461, 2717963, 2717831, 2665947, 1483921); Five Lots, which are Located within Orange Blossom Gardens Units 1, 3, And 3.1b (Wendy Then)

Town Planner Wendy Then presented the background summary for this agenda item (on file in the Clerk's Office). Ms. Then stated that the applicant, Martin L. Dzuro, on behalf of the Villages of Lake-Sumter, Inc., John and Patricia Porto, and Pamela A. Barsness, has filed applications to amend the future land use comprehensive plan for properties consisting of five lots located north of Griffin Avenue and northeast of North Highway 27/441 within the Orange Blossom Garden Subdivisions Units 1, 3, and 3.1B. The application involves 0.64 +/- acres of property from unincorporated Lake County into the Town of Lady Lake. The proposed properties are as follows:

- 1026 Aloha Way
- 803 Aloha Way
- 811 Truman Avenue
- 815 Royal Palm Avenue
- 817 Royal Palm Avenue

The Small Scale Future Land Use Map Amendment application was received on Monday, February 29, 2016, and has been reviewed and determined to be complete satisfying the necessary criteria as required to meet the requirements of the Land Development Regulations (LDRs) as well as the adopted Comprehensive Plan, and is ready for transmittal to the Town Commission.

Notices to inform the surrounding property owners (70) within 150' of the property of the proposed annexation were mailed on Thursday, March 24, 2016, and the properties were posted this same date. Ms. Then stated there have been no objections. There were two inquiries regarding annexation.

Concurrency Determination Statement: The Villages has removed existing manufactured homes on three of the lots in a historic section of the Villages known as Orange Blossom Gardens to construct a similar size conventional built home on each lot (the two homes on Aloha Way have yet to be removed). There will be no increase in utility services, traffic, population, or recreation use.

Impact on Town Services:

Potable Water-No impact, lots are served by the Village Center Community Development District Central Water System.

Sewer -No impact, lots are served by the Village Center Community Development District Central Sewer System.

Schools –Not factored for project – no foreseen impact of students as the project is located within an active adult retirement community.

Transportation – No impact, the existing home will be replaced with a new home. There will be no change in average daily trip generation.

Parks & Recreation – The small scale future land use amendment will not cause P&R Level of Service to be exceeded since the project is for the replacement of existing homes. Additionally, the Villages provides its residents with all Park and Recreation Amenities.

Stormwater – Project will be required to adhere to SJRWMD guidelines and of Town of Lady Lake Floodplain Management Ordinance for parcels within Special Flood Hazard Areas.

Applications have been reviewed and determined to be complete. The applicant has submitted all appropriate material in compliance with the Land Development Regulations (LDRs) and the application is ready for transmittal to the Town Commission. Additionally, the applications were reviewed and determined to be in compliance with the directives of the adopted Comprehensive Plan in accordance with the sought designation. A Concurrency Determination Statement has also

DRAFT

been included as part of the Small Scale Comprehensive Plan Amendment Application, which the applicant submitted to explain expected impacts on Town Services.

The subject properties involve approximately 0.64 ± acres lie in Section 06, Township 18 South, Range 24 East in Lake County, Florida. The Future Land Use of the adjacent properties is as follows:

Future Land Use

Subject Properties	Lake County Medium Urban Density
Future Land Use of Adjacent Properties	
West	Lake County Medium Urban Density
East	Lake County – Medium Urban Density
North	Lake County Medium Urban Density
South	Lake County Medium Urban Density

Comments:

1) Annexation and Rezoning Applications have been submitted concurrently with this Small Scale Future Land Use Amendment Application.

2) In accordance to the Interlocal Agreement for Building Permits & Inspections Section 2). A., executed on June 23, 2015, if the Villages has applied for annexation, then the Town can issue building permits located within the unincorporated area.

3) Project will be required to adhere to St. John's River Water Management District guidelines and the Town of Lady Lake Floodplain Management Ordinance for parcels within Special Flood Hazard Areas.

The Technical Review Committee (TRC) members individually reviewed application for Ordinance No. 2016-12, and determined the application to be complete and ready for transmittal to the Planning and Zoning Board. The Local Planning Agency is scheduled to consider Ordinance No. 2016-12 on Monday, May 2, 2016, at 5:30 p.m. The Town Commission is scheduled to consider Ordinance 2016-12 for first reading on Monday, May 2, 2016 at 6:00 p.m. The second/final reading will be held on Monday, May 16, 2016 at 6:00 p.m.

Chairperson Gauder asked if there were any comments or questions from the Board or the audience, and hearing none, asked for a motion.

Upon a motion by Member Chiasson and a second by Member McKenzie, the Planning and Zoning Board recommended transmittal and approval of Ordinance No. 2016-12 to the Town Commission for consideration by the following roll call vote:

MCKENZIE	*YES*
CHIASSON	*YES*
GAUDER	*YES*

4. ~~Ordinance No. 2016-13 – Rezoning – The Villages of Lake Sumter, Inc., John and Patricia Porto, and Pamela A. Barsness – Rezoning from Lake County Residential Medium~~

TOWN COMMISSION AGENDA ITEM

REQUESTED COMMISSION MEETING DATE: May 2, 2016 – First Reading

---

SUBJECT: **Ordinance 2016-12 —Small Scale Future Land Use Comprehensive Plan Amendment from Lake County Medium Urban Density to Lady Lake Manufactured Home High Density for 5 lots consisting of approximately 0.64 +/- acres of land, owned by The Villages of Lake-Sumter, Inc., John and Patricia Porto, and Pamela A. Barsness, which are located within Orange Blossom Gardens Units 1, 3, and 3.1B, Referenced by Alternate Keys 1482461, 2717963, 2717831, 2665947, 1483921.**

DEPARTMENT: **GROWTH MANAGEMENT**

STAFF RECOMMENDED MOTIONS:

Staff Recommends approval of Ordinance No. 2016-12, a Small Scale Comprehensive Plan Amendment – Requesting to Change approximately 0.64 +/- acres of land from Lake County Medium Urban Density to Lady Lake Manufactured Home High Density.

Applicant, Martin L. Dzuro, on behalf of the Villages of Lake-Sumter, Inc., John and Patricia Porto, and Pamela A. Barsness, has filed applications to amend the future land use comprehensive plan for properties consisting of 5 Lots located north of Griffin Avenue and northeast of North Highway 27/441 within the Orange Blossom Garden Subdivisions Units 1, 3, and 3.1B. The application involves 0.64 +/- acres of property from unincorporated Lake County into the Town of Lady Lake. The proposed properties are as follows:

- 1026 Aloha Way
- 803 Aloha Way
- 811 Truman Avenue
- 815 Royal Palm Avenue
- 817 Royal Palm Avenue

The Small Scale Future Land Use Map Amendment application was received on Monday, February 29, 2016, and has been reviewed and determined to be complete satisfying the necessary criteria as required to meet the requirements of the Land Development Regulations (LDRs) as well as the adopted Comprehensive Plan, and is ready for transmittal to the Town Commission.

Notices to inform the surrounding property owners (70) within 150' of the property of the proposed annexation were mailed on Thursday, March 24, 2016. The properties were also posted Thursday, March 24, 2016.

Concurrency Determination Statement

The Villages has removed existing manufactured homes on three (3) of the lots in a historic section of the Villages known as Orange Blossom Gardens to construct a similar size conventional built home on each lot (the two homes on Aloha Way have yet to be removed). There will be no increase in utility services, traffic, population, or recreation use.

Impact on Town Services

Potable Water-

- No impact, lots are served by the Village Center Community Development District Central Water System.

Sewer -

- No impact, lots are served by the Village Center Community Development District Central Sewer System.

Schools –

- Not factored for project – no foreseen impact of students as the project is located within an active adult retirement community.

Transportation –

- No impact, the existing home will be replaced with a new home. There will be no change in average daily trip generation.

Parks & Recreation –

- The small scale future land use amendment will not cause P&R Level of Service to be exceeded since the project is for the replacement of existing homes. Additionally, the Villages provides its residents with all Park and Recreation Amenities.

Stormwater –

- Project will be required to adhere to SJRWMD guidelines and of Town of Lady Lake Floodplain Management Ordinance for parcels within Special Flood Hazard Areas.

Applications have been reviewed and determined to be complete. The applicant has submitted all appropriate material in compliance with the Land Development Regulations (LDRs) and the application is ready for transmittal to the Town Commission. Additionally, the applications were reviewed and determined to be in compliance with the directives of the adopted Comprehensive Plan in accordance

with the sought designation. A Concurrency Determination Statement has also been included as part of the Small Scale Comprehensive Plan Amendment Application, which the applicant submitted to explain expected impacts on Town Services.

The subject properties involve approximately 0.64 ± acres lie in Section 06, Township 18 South, Range 24 East in Lake County, Florida. The Future Land Use of the adjacent properties is as follows:

Future Land Use

Subject Properties	Lake County Medium Urban Density
Future Land Use of Adjacent Properties	
West	Lake County Medium Urban Density
East	Lake County – Medium Urban Density
North	Lake County Medium Urban Density
South	Lake County Medium Urban Density

Comments:

1.) Annexation and Rezoning Applications have been submitted concurrently with this Small Scale Future Land Use Amendment Application.

2.) In accordance to the Interlocal Agreement for Building Permits & Inspections Section 2).A)., executed on June 23, 2015, if the Villages has applied for annexation, then the Town can issue building permits located within the unincorporated area.

3.) Project will be required to adhere to St. John's River Water Management District guidelines and the Town of Lady Lake Floodplain Management Ordinance for parcels within Special Flood Hazard Areas.

Past Actions:

The **Technical Review Committee (TRC)** members individually reviewed application for Ordinance 2016-12, and determined the application to be complete and ready for transmittal to the P&Z Board.

At the April 11, 2016 meeting, the **Planning and Zoning Board** recommended approval of Ordinance 2016-12 by a vote of 3-0.

Public Hearings

The **Local Planning Agency** is scheduled to consider Ordinance 2016-12 on Monday, May 2, 2016, at 5:30 p.m.

The **Town Commission** is scheduled to consider Ordinance 2016-12 for second and final reading on Monday, May 16, 2016 at 6:00 p.m.

FISCAL IMPACT: $ _____

[ ] Capital Budget **[ ] Operating** **[ ] Other**

ATTACHMENTS: **[X] Ordinance(s)** **[ ] Resolution** **[ ] Budget Resolution**

[ ] Other

[ ] Support Documents/Contracts Available for Review in Manager's Office

---

DEPARTMENT HEAD **Submitted** 4/25/16 **Date**

FINANCE DEPARTMENT **Approved as to Budget Requirements** **Date**

4-25-16 **TOWN ATTORNEY** **Approved as to Form and Legality** **Date**

TOWN MANAGER **Approved Agenda Item for:** 5/2/16 **Date** 4/25/16

BOARD ACTION: **[✓] Approved as Recommended** **[ ] Disapproved**
MOV/RIC 5-0

[ ] Tabled Indefinitely **[ ] Continued to Date Certain**

[ ] Approved with Modification

CC: THAD - G.M.

~~In accordance with the provisions of Florida Statute 171.205, and the Interlocal Service Boundary Agreement executed September 4, 2013 between Lake County, Florida and the Town of Lady Lake, Florida, the Town may annex property into the Town which are non-contiguous to the existing municipal boundary. The proposed properties under this application exist as non-contiguous lots.~~

~~The annexation application was received on Monday, February 29, 2016, and has been reviewed and determined to be complete, satisfying the necessary criteria as required for annexation under statutory requirements. The application was found to meet the requirements of the Land Development Regulations (LDRs) as well as the adopted Comprehensive Plan, and is ready for transmittal to the Town Commission.~~

~~Mr. Carroll reported that notices to inform the surrounding property owners (70) within 150 feet of the properties proposed by annexation request were mailed Thursday, March 24, 2016, and the properties were posted the same date. There have been no objections or letters of support received on this application.~~

~~Mr. Carroll reported that the Technical Review Committee (TRC) members individually reviewed application for Ordinance No. 2016-11, and determined the application to be complete and ready for transmittal to the Planning and Zoning Board. At the April 11, 2016 meeting, the Planning and Zoning Board recommended approval of Ordinance No. 2016-11 by a vote of 3-0. The Town Commission is scheduled to consider Ordinance No. 2016-11 for second/final reading on Monday, May 16, 2016 at 6:00 p.m. He stated Martin Dzuro is present to answer any questions.~~

~~Mayor Kussard asked if anyone had any questions or comments, and hearing none, asked for a motion.~~

~~***Upon a motion by Commissioner Hannan and seconded by Commissioner Holden, the Commission approved the first reading of Ordinance No. 2016-11 by the following roll call vote:***~~

~~***HOLDEN***~~	~~***YES***~~
~~***VINCENT***~~	~~***YES***~~
~~***HANNAN***~~	~~***YES***~~
~~***RICHARDS***~~	~~***YES***~~
~~***KUSSARD***~~	~~***YES***~~

8. Ordinance No. 2016-12 – First Reading – Small Scale Future Land Use Comprehensive Plan Amendment – The Villages of Lake-Sumter, Inc., John and Patricia Porto, and Pamela A. Barsness – from Lake County Medium Urban Density to Lady Lake Manufactured Home High Density for Five Lots Consisting of Approximately 0.64 +/- Acres of Land, Located in Orange Blossom Gardens Unit, 1, 3 and 3.1b. (Thad Carroll)

Town Attorney Derek Schroth read the ordinance by title only.

Growth Management Director Thad Carroll gave the background summary for this agenda item (on file in the Clerk's office). He stated that the applicant, Martin L. Dzuro, on behalf of The Villages of Lake-Sumter, Inc., John and Patricia Porto, and Pamela A. Barsness, has filed applications to amend the future land use comprehensive plan for properties consisting of five lots located north of Griffin Avenue and northeast of North Highway 27/441 within the Orange Blossom Garden Subdivisions Units 1, 3, and 3.1B. The application involves 0.64 +/- acres of property from unincorporated Lake County into the Town of Lady Lake. Staff recommends approval of this ordinance. The proposed properties are as follows:

- 1026 Aloha Way
- 803 Aloha Way
- 811 Truman Avenue
- 815 Royal Palm Avenue
- 817 Royal Palm Avenue

The Small Scale Future Land Use Map Amendment application was received on Monday, February 29, 2016, and has been reviewed and determined to be complete, satisfying the necessary criteria as required to meet the requirements of the Land Development Regulations (LDRs) as well as the adopted Comprehensive Plan, and is ready for transmittal to the Town Commission.

A map and an aerial view of the properties was shown, as were photos of the posting of the properties.

Mr. Carroll reported that notices to inform the surrounding property owners (70) within 150' of the property of the proposed annexation were mailed on Thursday, March 24, 2016, and the properties were posted this same date.

Concurrency Determination Statement - The Villages has removed existing manufactured homes on three (3) of the lots in a historic section of the Villages known as Orange Blossom Gardens to construct a similar size conventional built home on each lot (the two homes on Aloha Way have yet to be removed). There will be no increase in utility services, traffic, population, or recreation use.

Mr. Carroll reviewed the impact on Town services as follows:

Potable Water – No impact, lots are served by the Village Center Community Development District Central Water System.

Sewer – No impact, lots are served by the Village Center Community Development District Central Sewer System.

Schools – Not factored for project – no foreseen impact of students as the project is located within an active adult retirement community.

Transportation – No impact, the existing home will be replaced with a new home. There will be no change in average daily trip generation.

Parks & Recreation – The small scale future land use amendment will not cause P&R Level of Service to be exceeded since the project is for the replacement of existing homes. Additionally, the Villages provides its residents with all Park and Recreation Amenities.

Stormwater – Project will be required to adhere to SJRWMD guidelines and of Town of Lady Lake Floodplain Management Ordinance for parcels within Special Flood Hazard Areas.

Applications have been reviewed and determined to be complete. The applicant has submitted all appropriate material in compliance with the Land Development Regulations (LDRs) and the application is ready for transmittal to the Town Commission. Additionally, the applications were reviewed and determined to be in compliance with the directives of the adopted Comprehensive Plan in accordance with the sought designation. A Concurrency Determination Statement has also been included as part of the Small Scale Comprehensive Plan Amendment Application, which the applicant submitted to explain expected impacts on Town Services.

DRAFT

The subject properties involve approximately 0.64 ± acres lie in Section 06, Township 18 South, Range 24 East in Lake County, Florida. The Future Land Use of the adjacent properties is as follows:

Future Land Use

Subject Properties	Lake County Medium Urban Density
Future Land Use of Adjacent Properties	
West	Lake County Medium Urban Density
East	Lake County – Medium Urban Density
North	Lake County Medium Urban Density
South	Lake County Medium Urban Density

Comments:

1) Annexation and Rezoning Applications have been submitted concurrently with this Small Scale Future Land Use Amendment Application.
2) In accordance with the Interlocal Agreement for Building Permits & Inspections Section 2).A)., executed on June 23, 2015, if The Villages has applied for annexation, then the Town can issue building permits located within the unincorporated area.
3) Project will be required to adhere to St. John's River Water Management District guidelines and the Town of Lady Lake Floodplain Management Ordinance for parcels within Special Flood Hazard Areas.

Mr. Carroll reported that the Technical Review Committee (TRC) members individually reviewed application for Ordinance No. 2016-12, and determined the application to be complete and ready for transmittal to the Planning and Zoning Board. At the April 11, 2016 meeting, the Planning and Zoning Board recommended approval of Ordinance No. 2016-12 by a vote of 3-0. The Local Planning Agency considered this ordinance at an earlier meeting today and voted 5-0 for approval. The Town Commission is scheduled to consider Ordinance No. 2016-12 for second/final reading on Monday, May 16, 2016 at 6:00 p.m. He stated Martin Dzuro is present to answer any questions.

Mayor Kussard asked if anyone had any questions or comments, and hearing none, asked for a motion.

Upon a motion by Commissioner Holden and seconded by Commissioner Richards, the Commission approved the first reading of Ordinance No. 2016-12 by the following roll call vote:

HOLDEN	***YES***
VINCENT	***YES***
HANNAN	***YES***
RICHARDS	***YES***
KUSSARD	***YES***

~~**9. Ordinance No. 2016-13 – First Reading – Rezoning – The Villages of Lake-Sumter, Inc., John and Patricia Porto, and Pamela A. Barsness – Rezoning from Lake County Residential Medium (RM) to Lady Lake Mixed Residential Medium Density (MX-8) for Five (5) Lots of Approximately 0.64 +/- Acres – Located within Located Within Orange Blossom Gardens Units 1, 3, And 3.1b. (Thad Carroll)**~~

~~Town Attorney Derek Schroth read the ordinance by title only.~~

LOCAL PLANNNING AGENCY AGENDA ITEM

REQUESTED AGENCY MEETING DATE: May 2, 2016

PLEASE REFERENCE COMMISSION PACKET ITEM # L-8 FOR MATERIALS

SUBJECT: **Ordinance 2016-12 —Small Scale Future Land Use Comprehensive Plan Amendment from Lake County Medium Urban Density to Lady Lake Manufactured Home High Density for 5 lots consisting of approximately 0.64 +/- acres of land, owned by The Villages of Lake-Sumter, Inc., John and Patricia Porto, and Pamela A. Barsness, which are located within Orange Blossom Gardens Units 1, 3, and 3.1B, Referenced by Alternate Keys 1482461, 2717963, 2717831, 2665947, 1483921.**

DEPARTMENT: **GROWTH MANAGEMENT**

STAFF RECOMMENDED MOTIONS:

Staff Recommends approval of Ordinance No. 2016-12, a Small Scale Comprehensive Plan Amendment – Requesting to Change approximately 0.64 +/- acres of land from Lake County Medium Urban Density to Lady Lake Manufactured Home High Density.

Applicant, Martin L. Dzuro, on behalf of the Villages of Lake-Sumter, Inc., John and Patricia Porto, and Pamela A. Barsness, has filed applications to amend the future land use comprehensive plan for properties consisting of 5 Lots located north of Griffin Avenue and northeast of North Highway 27/441 within the Orange Blossom Garden Subdivisions Units 1, 3, and 3.1B. The application involves 0.64 +/- acres of property from unincorporated Lake County into the Town of Lady Lake. The proposed properties are as follows:

- 1026 Aloha Way
- 803 Aloha Way
- 811 Truman Avenue
- 815 Royal Palm Avenue
- 817 Royal Palm Avenue

The Small Scale Future Land Use Map Amendment application was received on Monday, February 29, 2016, and has been reviewed and determined to be complete satisfying the necessary criteria as required to meet the requirements of the Land Development Regulations (LDRs) as well as the adopted Comprehensive Plan, and is ready for transmittal to the Town Commission.

Notices to inform the surrounding property owners (70) within 150' of the property of the proposed annexation were mailed on Thursday, March 24, 2016. The properties were also posted Thursday, March 24, 2016.

Concurrency Determination Statement

The Villages has removed existing manufactured homes on three (3) of the lots in a historic section of the Villages known as Orange Blossom Gardens to construct a similar size conventional built home on each lot (the two homes on Aloha Way have yet to be removed). There will be no increase in utility services, traffic, population, or recreation use.

Impact on Town Services

Potable Water-

- No impact, lots are served by the Village Center Community Development District Central Water System.

Sewer -

- No impact, lots are served by the Village Center Community Development District Central Sewer System.

Schools –

- Not factored for project – no foreseen impact of students as the project is located within an active adult retirement community.

Transportation –

- No impact, the existing home will be replaced with a new home. There will be no change in average daily trip generation.

Parks & Recreation –

- The small scale future land use amendment will not cause P&R Level of Service to be exceeded since the project is for the replacement of existing homes. Additionally, the Villages provides its residents with all Park and Recreation Amenities.

Stormwater –

- Project will be required to adhere to SJRWMD guidelines and of Town of Lady Lake Floodplain Management Ordinance for parcels within Special Flood Hazard Areas.

Applications have been reviewed and determined to be complete. The applicant has submitted all appropriate material in compliance with the Land Development Regulations (LDRs) and the application is ready for transmittal to the Town Commission. Additionally, the applications were reviewed and determined to be in

compliance with the directives of the adopted Comprehensive Plan in accordance with the sought designation. A Concurrency Determination Statement has also been included as part of the Small Scale Comprehensive Plan Amendment Application, which the applicant submitted to explain expected impacts on Town Services.

The subject properties involve approximately 0.64 ± acres lie in Section 06, Township 18 South, Range 24 East in Lake County, Florida. The Future Land Use of the adjacent properties is as follows:

Future Land Use

Subject Properties	Lake County Medium Urban Density
Future Land Use of Adjacent Properties	
West	Lake County Medium Urban Density
East	Lake County – Medium Urban Density
North	Lake County Medium Urban Density
South	Lake County Medium Urban Density

Comments:

1.) Annexation and Rezoning Applications have been submitted concurrently with this Small Scale Future Land Use Amendment Application.

2.) In accordance to the Interlocal Agreement for Building Permits & Inspections Section 2).A)., executed on June 23, 2015, if the Villages has applied for annexation, then the Town can issue building permits located within the unincorporated area.

3.) Project will be required to adhere to St. John's River Water Management District guidelines and the Town of Lady Lake Floodplain Management Ordinance for parcels within Special Flood Hazard Areas.

Past Actions:

The **Technical Review Committee (TRC)** members individually reviewed application for Ordinance 2016-12, and determined the application to be complete and ready for transmittal to the P&Z Board.

At the April 11, 2016 meeting, the **Planning and Zoning Board** recommended approval of Ordinance 2016-12 by a vote of 3-0.

Public Hearings

The **Town Commission** is scheduled to consider Ordinance 2016-12 for second and final reading on Monday, May 16, 2016 at 6:00 p.m.

FISCAL IMPACT: $_____

[ ] Capital Budget **[ ] Operating** **[ ] Other**

ATTACHMENTS: **[X] Ordinance(s)** **[ ] Resolution** **[ ] Budget Resolution**

[ ] Other

[ ] Support Documents/Contracts Available for Review in Manager's Office

---

(12) 4/27/16

DEPARTMENT HEAD		**Submitted** 4/27/16	**Date**
FINANCE DEPARTMENT		**Approved as to Budget Requirements**	**Date**
TOWN ATTORNEY		**Approved as to Form and Legality**	**Date**
TOWN MANAGER		**Approved Agenda Item for:** 5/2/16	**Date** 4/27/1

BOARD ACTION: **[✓] Approved as Recommended** RIC/HOL 5-0 **[ ] Disapproved**

[ ] Tabled Indefinitely **[ ] Continued to Date Certain**

[ ] Approved with Modification

cc: THAD-G.M.

~~**MINUTES OF**~~
~~**THE LOCAL PLANNING AGENCY**~~
~~**LADY LAKE, FLORIDA**~~
~~**May 2, 2016**~~

~~The Local Planning Agency Meeting was held in the Commission Chambers at Lady Lake Town Hall, 409 Fennell Blvd., Lady Lake, Florida with Chairperson Ruth Kussard presiding. The meeting convened at 5:30 p.m.~~

~~**CALL TO ORDER:** Chairperson/Member Ruth Kussard~~

~~**ROLL CALL:** Member Tony Holden~~
~~Member Paul Hannan~~
~~Member Dan Vincent~~
~~Member Jim Richards~~
~~Chairperson/Member Ruth Kussard~~

~~**STAFF MEMBERS PRESENT:** Kris Kollgaard, Town Manager/Town Clerk; Derek Schroth, Town Attorney; Thad Carroll, Growth Management Director; C.T. Eagle, Public Works Director; and Nancy Slaton, Deputy Town Clerk~~

~~**PUBLIC COMMENT:** Chairperson/Member Kussard asked if there were any comments from the audience. There were no comments.~~

~~**NEW BUSINESS:**~~

~~**1. Approval of Minutes: March 7, 2016 Local Planning Agency Meeting (on file in the Town Clerk's office)**~~

~~***Upon a motion by Member Richards and seconded by Member Holden, the Local Planning Agency members approved the minutes of the March 7, 2016 meeting as presented by a vote of 5 to 0.***~~

2. Ordinance No. 2016-12 – Small Scale Future Land Use Comprehensive Plan Amendment – The Villages of Lake-Sumter, Inc., John and Patricia Porto, and Pamela A. Barsness – from Lake County Medium Urban Density to Lady Lake Manufactured Home High Density for Five Lots Consisting of Approximately 0.64 +/- Acres of Land, Referenced by Alternate Keys 1482461, 2717963, 2717831, 2665947, 1483921 (Thad Carroll)

Growth Management Director Thad Carroll gave the background summary for this agenda item (on file in the Town Clerk's office). He stated that the applicant, Martin L. Dzuro, on behalf of The Villages of Lake-Sumter, Inc., John and Patricia Porto, and Pamela A. Barsness, has filed applications to amend the future land use comprehensive plan for properties consisting of five lots located north of Griffin Avenue and northeast of North Highway 27/441 within the Orange Blossom Garden Subdivisions Units 1, 3, and 3.1B. The application involves 0.64 +/- acres of property from unincorporated Lake County into the Town of Lady Lake. The proposed properties are as follows:

- 1026 Aloha Way
- 803 Aloha Way
- 811 Truman Avenue

DRAFT

- 815 Royal Palm Avenue
- 817 Royal Palm Avenue

Mr. Carroll stated that staff's recommendation is for approval of this ordinance. A map of the properties, an aerial view, a Future Land Use map, and photos of the postings were shown.

The Small Scale Future Land Use Map Amendment application was received on Monday, February 29, 2016, and has been reviewed and determined to be complete satisfying the necessary criteria as required to meet the requirements of the Land Development Regulations (LDRs) as well as the adopted Comprehensive Plan, and is ready for transmittal to the Town Commission.

Concurrency Determination Statement - The Villages has removed existing manufactured homes on three of the lots in a historic section of The Villages known as Orange Blossom Gardens to construct a similar size conventional built home on each lot (the two homes on Aloha Way have yet to be removed). There will be no increase in utility services, traffic, population, or recreation use.

Mr. Carroll noted that there will be no impact on Town services as shown below:

Potable Water – No impact, lots are served by the Village Center Community Development District Central Water System.

Sewer – No impact, lots are served by the Village Center Community Development District Central Sewer System.

Schools – Not factored for project – no foreseen impact of students as the project is located within an active adult retirement community.

Transportation – No impact, the existing home will be replaced with a new home. There will be no change in average daily trip generation.

Parks & Recreation – The small scale future land use amendment will not cause P&R Level of Service to be exceeded since the project is for the replacement of existing homes. Additionally, the Villages provides its residents with all Park and Recreation Amenities.

Stormwater – Project will be required to adhere to SJRWMD guidelines and of Town of Lady Lake Floodplain Management Ordinance for parcels within Special Flood Hazard Areas.

Applications have been reviewed and determined to be complete. The applicant has submitted all appropriate material in compliance with the Land Development Regulations (LDRs) and the application is ready for transmittal to the Town Commission. Additionally, the applications were reviewed and determined to be in compliance with the directives of the adopted Comprehensive Plan in accordance with the sought designation. A Concurrency Determination Statement has also been included as part of the Small Scale Comprehensive Plan Amendment Application, which the applicant submitted to explain expected impacts on Town services.

The subject properties involve approximately 0.64 ± acres lie in Section 06, Township 18 South, Range 24 East in Lake County, Florida. The Future Land Use of the adjacent properties is as follows:

Future Land Use

DRAFT

Subject Properties	Lake County Medium Urban Density
Future Land Use of Adjacent Properties	
West	Lake County Medium Urban Density
East	Lake County – Medium Urban Density
North	Lake County Medium Urban Density
South	Lake County Medium Urban Density

Comments:

1) Annexation and Rezoning Applications have been submitted concurrently with this Small Scale Future Land Use Amendment Application.

2) In accordance to the Interlocal Agreement for Building Permits & Inspections Section 2).A)., executed on June 23, 2015, if The Villages has applied for annexation, then the Town can issue building permits located within the unincorporated area.

3) Project will be required to adhere to St. John's River Water Management District guidelines and the Town of Lady Lake Floodplain Management Ordinance for parcels within Special Flood Hazard Areas.

Mr. Carroll reported that the application for the SSFLUM application was received Monday, February 29, 2016. Notices to inform the surrounding property owners (70) within 150 feet of the properties proposed by annexation request were mailed Thursday, March 24, 2016, and the properties were posted this same date. He stated there have been no objections or letters of support from surrounding property owners regarding the application to date.

The Technical Review Committee (TRC) members individually reviewed application for Ordinance No. 2016-12, and determined the application to be complete and ready for transmittal to the Planning and Zoning Board. At the April 11, 2016 meeting, the Planning and Zoning Board recommended approval of Ordinance No. 2016-12 by a vote of 3-0. The Town Commission is scheduled to consider Ordinance No. 2016-12 for second/final reading on Monday, May 16, 2016 at 6:00 p.m.

Mr. Carroll stated that Martin Dzuro is present if there are any questions.

Commissioner Hannan asked if there will be any trees cut down to provide for this new construction.

Mr. Dzuro replied that he did not believe any trees will be cut down, but if there were, they would conform to the Lady Lake tree ordinance.

Commission Hannan commented that he has noticed trees being cut down daily illegally.

Mayor Kussard asked if anyone in the audience had any questions or comments, and hearing none, asked for a motion.

Upon a motion by Member Richards and seconded by Member Holden, the Local Planning Agency recommended approval of Ordinance No. 2016-12 by the following roll call vote:

HOLDEN ***YES***

DRAFT

HANNAN	*YES*
VINCENT	*YES*
RICHARDS	*YES*
KUSSARD	*YES*

~~3. Ordinance No. 2016-14 – Large Scale Future Land Use Comprehensive Plan Amendment – Lady Lake Inc. – from Lady Lake Mixed Residential Medium Density (MR-MD) to Lady Lake Commercial Tourist (CT) for Property Being 29.43 ± Acres of Land – Located At 609 Highway 466, Being North of Highway 466, West of North Clay Avenue, and East of Rolling Acres Road (Thad Carroll)~~

~~Growth Management Director Thad Carroll gave the background summary for this agenda item (on file in the Town Clerk's office). He stated that the applicant, Bret Jones, P.A., has filed an application on behalf of Lady Lake, Inc. to amend the Future Land Use designation of property (AK# 1120829) located at 609 Highway 466, being north of Highway 466, west of North Clay Avenue, and east of Rolling Acres Road, which includes 29.43± acres within Town of Lady Lake limits, from Mixed Residential Medium Density (MR-MD) to Commercial Tourist (CT).~~

~~Mr. Carroll stated that the present use of the property is a storage area for the RV park and the proposed use is for a 232-unit RV park site with amenities. He stated staff's recommendation is for approval.~~

~~A map and an aerial view of the property, a Future Land Use and adjacent parcels map, and photos of the posting of the properties were shown.~~

~~The Large Scale Future Land Use Map Amendment application was received on February 22, 2016. It has been reviewed and determined to be complete, satisfying the necessary criteria as required to meet the requirements of the Land Development Regulations (LDRs) as well as the adopted Comprehensive Plan, and is ready for transmittal to the Town Commission.~~

~~The conceptual bubble plan submitted by Riddle Newman Engineering, Inc., highlights the proposed park facility and included the general area of where the amenities will be placed in the park, as well as the street network and water retention area.~~

~~Mr. Carroll reviewed the impact on Town services as follows:~~

~~Potable Water –~~

- ~~Potable Water Systems – CUP allocation of 1.18 million gpd (2016)~~
- ~~Current water systems usage – 697,461 gpd~~
- ~~Demand Contingent on Occupants of Development (482,539 gpd available)~~
- ~~Estimated consumption 28,000 gpd~~

~~Sewer – The applicant has proposed to utilize the existing onsite sewer plant; no additional impact to the Town of Lady Lake (pending waiver to not connect).~~

~~Schools – Not factored for project – no foreseen impact of students.~~

~~Transportation – Traffic Analysis indicates a that the proposed Future Land Use designation of CT – RV Park, will generate 125 fewer a.m. peak hour trips and 164 fewer p.m. peak hour trips~~

DRAFT

K-9

TOWN COMMISSION AGENDA ITEM

REQUESTED COMMISSION MEETING DATE: May 16, 2016 – Second/Final Reading

---

SUBJECT: **Ordinance 2016-13 - Rezoning from Lake County Residential Medium (RM) to Lady Lake Mixed Residential Medium Density (MX-8) for 5 lots consisting of approximately 0.64 +/- acres of land which are located within Orange Blossom Gardens Units 1, 3, and 3.1B, Referenced by Alternate Keys 1482461, 2717963, 2717831, 2665947, 1483921.**

DEPARTMENT: **GROWTH MANAGEMENT**

STAFF RECOMMENDED MOTION:

Staff Recommends approval of Ordinance No. 2016-13, rezoning 0.64 ± Acres of Property consisting of 5 lots – Located within Orange Blossom Gardens Units 1, 3, and 3.1B within Lake County, Florida – Requesting to Change from Lake County Residential Medium (RM) to Lady Lake Mixed Residential Medium Density (MX-8.

Applicant, Martin L. Dzuro, on behalf of the Villages of Lake-Sumter, Inc., John and Patricia Porto, and Pamela A. Barsness, has filed an application to rezone properties consisting of 5 Lots located north of Griffin Avenue and northeast of North Highway 27/441 within the Orange Blossom Garden Subdivisions Units 1, 3, and 3.1B. The application involves rezoning 0.64 +/- acres of property from Lake County Residential Medium (RM) to Lady Lake Mixed Residential Medium Density (MX-8). The MX-8 designation is consistent with the other lots in the Villages which are presently in the Town of Lady Lake's jurisdiction. The proposed properties are as follows:

- 1026 Aloha Way
- 803 Aloha Way
- 811 Truman Avenue
- 815 Royal Palm Avenue
- 817 Royal Palm Avenue

The Rezoning application was received on Monday, February 29, 2016, and has been reviewed and determined to be complete satisfying the necessary criteria as required to meet the requirements of the Land Development Regulations (LDRs) as well as the adopted Comprehensive Plan, and is ready for transmittal to the Town Commission.

Notices to inform the surrounding property owners (70) within 150' of the property of the proposed annexation were mailed on Thursday, March 24, 2016. The properties were also posted Thursday, March 24, 2016.

The subject properties lie in Section 06, Township 18 South, Range 24 East, in Lake County, Florida. Appropriate legal descriptions and survey information have been included with the submitted application. The zoning designation of the subject properties and adjacent properties are as follows:

Zoning

Subject Property	Lake County Residential Medium (RM)
Zoning of Adjacent Properties	
West	Lake County Residential Medium (RM)
East	Lake County Residential Medium (RM)
North	Lake County Residential Medium (RM)
South	Lake County Residential Medium (RM)

Past Actions:

The **Technical Review Committee (TRC)** members individually reviewed application for Ordinance 2016-13, and determined the application to be complete and ready for transmittal to the P&Z Board.

At the April 11, 2016 meeting, the **Planning and Zoning Board** recommended approval of Ordinance 2016-13 by a vote of 3-0.

At the May 2, 2016 meeting, the **Town Commission** voted 5-0 for approval of Ordinance 2016-13 upon First Reading.

FISCAL IMPACT: $_____

[ ] Capital Budget **[ ] Operating** **[ ] Other**

ATTACHMENTS: [X] Ordinance(s) [ ] Resolution [ ] Budget Resolution

[ ] Other

[ ] Support Documents/Contracts Available for Review in Manager's Office

---

DEPARTMENT HEAD		**Submitted** 5/9/16	**Date**
FINANCE DEPARTMENT		**Approved as to Budget Requirements**	**Date**
TOWN ATTORNEY		**Approved as to Form and Legality**	**Date**
TOWN MANAGER		**Approved Agenda Item for:** 5-16-16	**Date**

(LK) 5-9-2016

BOARD ACTION: [ ] Approved as Recommended [ ] Disapproved

[ ] Tabled Indefinitely [ ] Continued to Date Certain

[ ] Approved with Modification

ORDINANCE NO. 2016-13

AN ORDINANCE REDESIGNATING ZONING CLASSIFICATION FOR CERTAIN PROPERTY BEING 0.64 ± ACRES OF LAND OWNED BY THE VILLAGES OF LAKE-SUMTER, INC., JOHN AND PATRICIA PORTO, AND PAMELA A. BARSNESS; REFERENCED BY ALTERNATE KEYS 1482461, 2717963, 2717831, 2665947 , 1483921, 5 LOTS, WHICH ARE LOCATED WITHIN ORANGE BLOSSOM GARDENS UNIT 1, 3, AND 3.1B WITHIN LAKE COUNTY, FLORIDA; REZONING SUBJECT PROPERTY FROM LAKE COUNTY RESIDENTIAL MEDIUM (RM) TO LADY LAKE MIXED RESIDENTIAL MEDIUM DENSITY (MX-8); PROVIDING FOR SEVERABILITY; ESTABLISHING AN EFFECTIVE DATE.

WHEREAS, on December 2, 1991, the Town of Lady Lake adopted a Comprehensive Plan (Ordinance No. 91-21) pursuant to the requirements of Chapter 163, Part II, Florida Statutes and Chapter 9J-5, Florida Administrative Code; and

WHEREAS, on January 23, 1992, the Florida Department of Community Affairs determined that the Town of Lady Lake Comprehensive Plan was in compliance with the requirements of Chapter 163, Part II, Florida Statutes and Chapter 9J-5, Florida Administrative Code; and

WHEREAS, on August 15, 1994, the Town of Lady Lake adopted the Land Development Regulations of the Town of Lady Lake, Florida, and Official Zoning Map in accordance with the Town of Lady Lake Comprehensive Plan and the requirements of Chapter 163, Part II, Florida Statutes; and

WHEREAS, the Town Commission of the Town of Lady Lake held a public hearing to consider a proposed amendment to the Official Zoning Map and determined that said amendment as proposed is consistent with the Town of Lady Lake Comprehensive Plan and meets the requirements of the Town of Lady Lake Land Development Regulations.

THEREFORE, BE IT ORDAINED and enacted by the Town Commission of the Town of Lady Lake, in Lake County, Florida:

Section 1. Based upon the petition of certain landowners of property, which is located in Lake County, Florida, and described in Exhibit "A" hereto, a request has been made that the property be zoned "Lady Lake Mixed Residential Medium Density" (MX-8). Said petition has been approved by the Town Commission of the Town of Lady Lake in accordance with the Town of Lady Lake Comprehensive Plan, the Land Development Regulations of the Town of Lady Lake, the Charter of the Town of Lady Lake, and the Florida Statutes. The property described in Exhibit "A" hereto is hereby rezoned from "Lake County Residential Medium" (RM) to Lady Lake "Mixed Residential Medium Density" (MX-8).

Section 2. **Severability.** The provisions of this Ordinance are declared to be separable and if any section, sentence, clause or phrase of this Ordinance shall for any reason be held to be invalid or unconstitutional, such decision shall not effect the validity of the remaining sections, sentences, clauses or phrases of this Ordinance, but they shall remain in effect, it being the legislative intent that this Ordinance shall stand notwithstanding the invalidity of any part.

Section 3. **Effective Date.** This Ordinance shall become effective immediately upon its passage by the Town Commission, except as limited by the provisions of Section 171.06, Florida Statutes, as said provisions pertain to newly annexed property and the final adoption of a Comprehensive Plan Amendment by the Town Commission.

PASSED AND ORDAINED this **16th** day of **May, 2016**, in the regular session of the Town Commission of the Town of Lady Lake, Lake County, Florida, upon the Second/Final Reading.

TOWN OF LADY LAKE, FLORIDA

_____

Ruth Kussard, Mayor

ATTEST:

_____

Kristen Kollgaard, Town Clerk

APPROVED AS TO FORM:

_____

Derek Schroth, Town Attorney

EXHIBIT "A"
Legal Descriptions and Map

Parcel ID #: 06-18-24-0100-0000-7400' Lot 74, Unit 1, Orange Blossom Gardens, according to the plat thereof recorded in Plat Book 18, Page 9, Public Records of Lake County, Florida.

Parcel ID #: 06-18-24-0350-000-19400; Lot 194, Unit 3-lB, Orange Blossom Gardens, according to the plat thereof recorded in Plat Book 25, Page 33, Public Records of Lake County, Florida.

Parcel ID #: 06-18-24-0300-000-11000; Lot 110, Unit 3, Orange Blossom Gardens, according to the plat thereof recorded in Plat Book 23, Pages 27 through 29, Public Records of Lake County, Florida.

Parcel ID #: 06-18-24-0300-000-11100; Lot 111, Unit 3, Orange Blossom Gardens, according to the plat thereof recorded in Plat Book 23, Pages 27 through 29, Public Records of Lake County, Florida.

-AND

Parcel ID #: 06-18-24-0300-000-13100; Lot 131, Unit 3, Orange Blossom Gardens, according to the plat thereof recorded in Plat Book 23, Pages 27 through 29, Public Records of Lake County, Florida.

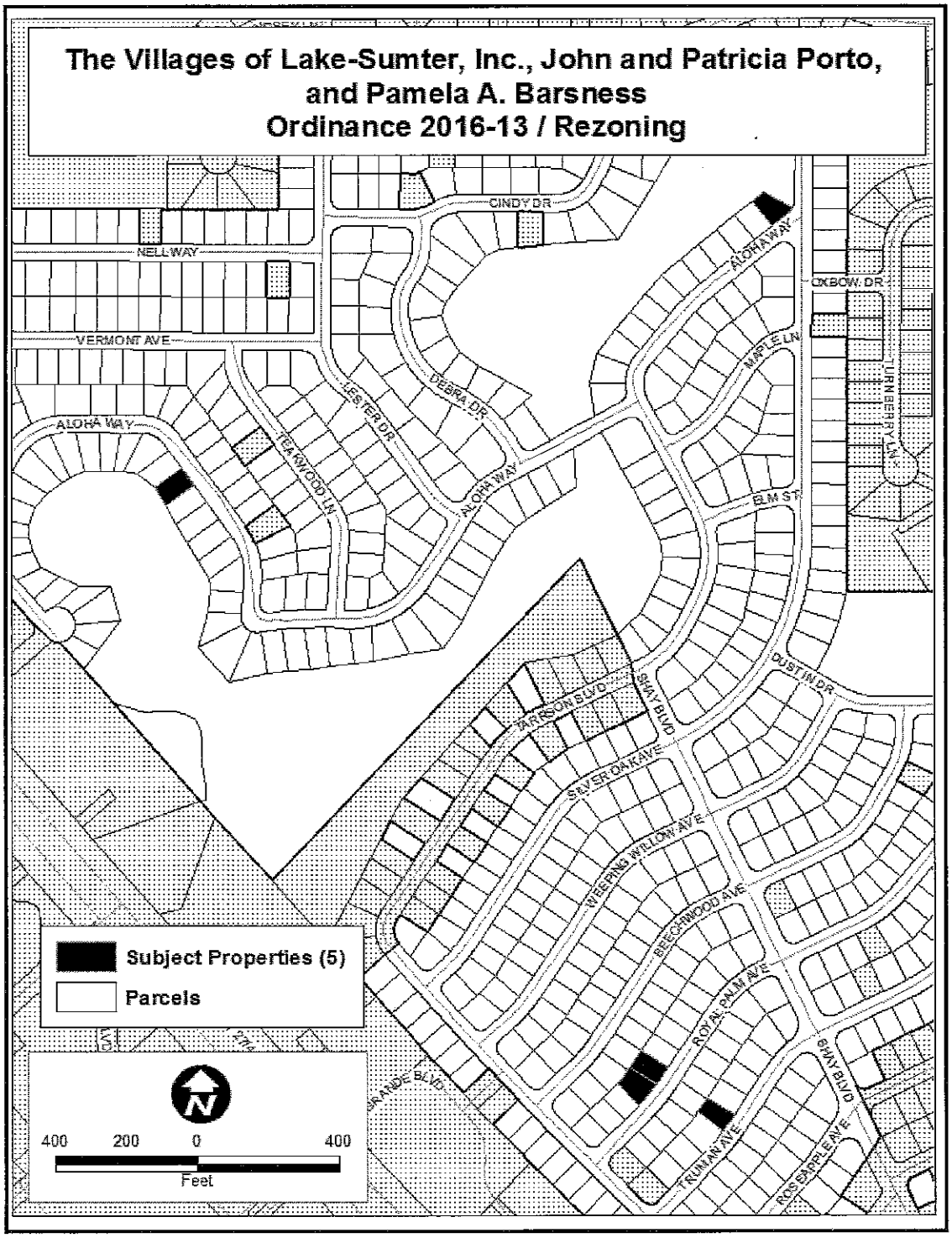
The Villages of Lake-Sumter, Inc., John and Patricia Porto, and Pamela A. Barsness
Ordinance 2016-13 / Rezoning
CINDY DR
NELL WAY
VERMONT AVE
ALOHA WAY
LESTER DR
DEBRA DR
TEAKWOOD LN
ALOHA WAY
ALOHA WAY
OXBOW DR
MAPLE LN
TURNBERRY LN
B.M ST
DUSTIN DR
HARRISON BLVD
SHAY BLVD
SILVER OAK AVE
WEEPING WILLOW AVE
BEECHWOOD AVE
ROYAL PALM AVE
TRUMAN AVE
ROSE APPLE AVE
SHAY BLVD
Subject Properties (5)
Parcels
400 200 0 400
Feet

1

TOWN OF LADY LAKE
REZONING APPLICATION

Alternate Key Number See attached list.

1. Owner's Name: The Villages of Lake-Sumter, Inc./John and Patricia Porto/Patricia A. Barsness

   Mailing Address: 1020 Lake Sumter Landing, The Villages, FL 32162/500 Elm Street Ext U 14-3, North Haven, CT 06473/803 Aloha Way, LadyLake, FL 32159

   Email Address: See below.

   Telephone #: See below.

2. Applicant's Name: The Villages of Lake-Sumter, Inc. - Martin L. Dzuro, VP

   Mailing Address: 1045 Lake Sumter Landing, The Villages, FL 32162

   Email Address: marty.dzuro@thevillages.com

   Telephone #: (352) 753-6262

3. Applicant is: Owner X Agent ___ Purchaser ___ Lessee ___ Optionee ___

4. Property Address/Location: See attached list.

5. Legal Description of Property to be rezoned: See attached list.

6. The property is located in the vicinity of the following streets:
   Northeast of US 441, North of Griffin Ave.

7. Area of Property: 27,844 Square feet _____ Acres 0.64

8. Utilities: Central Water X Central Sewer X Well ____ Septic Tank ____

9. Existing zoning of property: Lake County: RM - Residential Medium

10. Requested zoning of property: Lady Lake: MX-8 - Mixed Single Family

    Note: If the requested zoning is a Planned Unit Development (PUD), indicate type: X Residential, ___ Commercial, ____ Industrial, ____ Mixed Use, and refer to the requirements of the preliminary development plan and see Chapter ____ of the LDR Code. If the rezoning is to Manufactured Homes High Density (MH-9), a Master Park Plan shall be submitted.

11. Number, square footage and present use of the existing structures on the property;
    None.

12. Proposed use the property: Residential

Applications shall include a legal description of the property, proof of ownership and authorization from the owner if represented by an agent or contract purchaser.

I certify that the statements in this application are true to the best of my knowledge.

Signature of Applicant

PLEASE SUBMIT THE APPLICATION, ACCOMPANIED BY THE APPROPRIATE REVIEW FEES AND **FIFTY (50)** COPIES OF ALL APPLICABLE INFORMATION DOCUMENTATION AS REQUIRED BY THE LADY LAKE LAND DEVELOPMENT REGULATION, ADOPTED AUGUST 15, 1994 TO THE GROWTH MANAGEMENT DEPARTMENT. ADDITIONAL COPIES OF APPLICATION AND PLANS WILL BE REQUIRED PRIOR TO CONSIDERATION AT THE PLANNING AND ZONING BOARD AND TOWN COMMISSION MEETINGS.

Office Use:

Date Application Received: 2/29/16 Received by: T. Carroll

Annexation and Rezoning Fees Paid: $2,500.00

CONSENT AND DESIGNATION OF AGENT

The undersigned, JOHN PORTO and PATRICIA PORTO, as Owners of Lot 74, Orange Blossom Gardens, Unit 1, according to the plat thereof recorded in Plat Book 18, Page 9, Public Records of Lake County, Florida, hereby designate Martin L. Dzuro, Vice President of The Villages of Lake-Sumter, Inc., a Florida corporation, as its Agent, and authorizes him to execute all documents on their behalf in their Application for Annexation from Lake County into the Town of Lady Lake, a Small Scale Comprehensive Plan and Rezoning, and for submission of the Property for those purposes as set forth in the documents rendered in that process.

Dated this 10th day of February, 2016.

JOHN PORTO

PATRICIA PORTO

STATE OF FLORIDA
COUNTY OF SUMTER

The foregoing instrument was acknowledged before me this 10 day of February, 2016, by JOHN PORTO and PATRICIA PORTO, who produced Com. Drivers License as identification or who are personally known to me.

Terry L. Jensen
State of Florida
MY COMMISSION # FF 140287
Expires: August 22, 2018

Notary Public, State of Florida

Terry L. Jensen
Printed Name

My Commission Expires: Aug 22, 2018

(SEAL)

CONSENT AND DESIGNATION OF AGENT

The undersigned, PAMELA A. BARSNESS, as Owners of Lot 194 Orange Blossom Gardens, Unit 3-1B, according to the plat thereof recorded in Plat Book 25, Pages 33, Public Records of Lake County, Florida, hereby designate Martin L. Dzuro, Vice President of The Villages of Lake-Sumter, Inc., a Florida corporation, as its Agent, and authorizes him to execute all documents on their behalf in their Application for Annexation from Lake County into the Town of Lady Lake, a Small Scale Comprehensive Plan and Rezoning, and for submission of the Property for those purposes as set forth in the documents rendered in that process.

Dated this 25 day of February, 2016.

Pamela A. Barsness
PAMELA A. BARSNESS

STATE OF FLORIDA
COUNTY OF ~~SUMTER~~ Lake

The foregoing instrument was acknowledged before me this 25 day of February, 2016, by PAMELA A. BARSNESS, who produced FL Driver's License as identification or who is personally known to me.

GIOVANNA FIORINO
MY COMMISSION # FF 946846
EXPIRES: December 29, 2019
Bonded Thru Notary Public Underwriters

Giovanna Fiorino
Notary Public, State of Florida
Giovanna Fiorino
Printed Name
My Commission Expires: 12/29/19

(SEAL)

APPLICANT'S AFFIDAVIT

STATE OF FLORIDA
COUNTY OF LAKE

Before me, the undersigned authority personally appeared Martin L. Dzuro, V.P The Villages of Lake-Sumter Inc. , who being by me first duly sworn on oath, deposes and says:

(1) That he affirms and certifies that he understands and will comply with all ordinances, regulations, and provisions of the Town of Lady Lake, Florida, and that all statements and diagrams submitted herewith are true and accurate to the best of his knowledge and belief, and further, that this application and attachments shall become part of the Official Records of the Town of Lady Lake, Florida, and are not returnable.

(2) That the submittal requirements for the application have been completed and attached hereto as part of this application.

(3) That the applicant desires Annexation with a MX-8 zoning classification to allow: Mixed Single Family

(4) That the sign cards will be posted two (2) weeks prior to the Planning and Zoning Board hearing and will remain posted until final determination by the Town Commission after which time the sign cards are to be removed.

(5) That the applicant acknowledges the obligation to enter into an agreement acceptable to the Town for the extension of municipal water and sewer services as a condition of the annexation.

Affiant (Applicant's Signature)

The foregoing instrument was acknowledged before me this 21 day of Feb., 2016, by Martin L. Dzuro, who is personally known to me or who has produced _____ as identification and who did (did not) take an oath.

Notary Public

Vicki C. Varnon

VICKI C. VARNON
MY COMMISSION EXPIRES
September 22, 2019
#FF 909781
Bonded thru Troy Fain - Insurance
NOTARY PUBLIC, STATE OF FLORIDA

Exhibit A

Parcel ID #: 06-18-24-0100-0000-7400
Lot 74, Unit 1, Orange Blossom Gardens, according to the plat thereof recorded in Plat Book 18, Page 9, Public Records of Lake County, Florida.

Parcel ID #: 06-18-24-0350-000-19400
Lot 194, Unit 3-1B, Orange Blossom Gardens, according to the plat thereof recorded in Plat Book 25, Page 33, Public Records of Lake County, Florida.

Parcel ID #: 06-18-24-0300-000-11000
Lot 110, Unit 3, Orange Blossom Gardens, according to the plat thereof recorded in Plat Book 23, Pages 27 through 29, Public Records of Lake County, Florida.

Parcel ID #: 06-18-24-0300-000-11100
Lot 111, Unit 3, Orange Blossom Gardens, according to the plat thereof recorded in Plat Book 23, Pages 27 through 29, Public Records of Lake County, Florida.

-AND-

Parcel ID #: 06-18-24-0300-000-13100
Lot 131, Unit 3, Orange Blossom Gardens, according to the plat thereof recorded in Plat Book 23, Pages 27 through 29, Public Records of Lake County, Florida.

INSTRUMENT#:2014021217 OR BK 4444 PG 1624 PAGES: 1 2/25/2014 3:51:25 PM
NEIL KELLY, LAKE COUNTY CLERK OF THE CIRCUIT COURT
REC FEES: $10.00 DEED DOC:$630.00

90,000

Prepared by and return to:
Gary Fuchs/cps
Attorney at Law
McLin & Burnsed PA
1028 Lake Sumter Landing
The Villages, FL 32162
File No.: B00303

RETURN

Entry _____
Rec _____
Doc _____
Int _____
Total _____

[Space Above This Line For Recording Data]

Warranty Deed

This Warranty Deed made this 6th day of **February, 2014** between **Collin Priestley**, whose post office address is **#2 West 2nd St., Media, PA 19063 and Kristin Priestley**, whose post office address is 412 W. State St., Apt. #1, Media, PA 19063, grantors, and **John Porto and Patricia Porto, husband and wife**, whose post office address is **500 Elm Street Ext Unit 14-3, North Haven, CT 06473** grantees:

(Whenever used herein the terms "grantor" and "grantee" include all the parties to this instrument and the heirs, legal representatives, and assigns of individuals, and the successors and assigns of corporations, trusts and trustees)

WITNESSETH, that said grantors, for and in consideration of the sum of TEN AND NO/100 DOLLARS ($10.00) and other good and valuable considerations to said grantors in hand paid by said grantees, the receipt whereof is hereby acknowledged, has granted, bargained, and sold to the said grantees, and grantees' heirs and assigns forever, the following described land, situate, lying and being in **Lake County Florida** to-wit:

PARCEL ID #: 0618240100-000-07400

Lot 74, Unit 1, Orange Blossom Gardens, according to the plat thereof recorded in Plat Book 18, Page 9, Public Records of Lake County, Florida.

Together with the Manufactured Home, bearing VIN # 02630183 AK & BK thereon. The Titles have been retired.

This property does not constitute either the residence or the homestead of either Grantor named above as the same is defined by the Constitution or the laws of the State of Florida.

TOGETHER with all the tenements, hereditaments and appurtenances thereto belonging or in anywise appertaining.

TO HAVE AND TO HOLD, the same in fee simple forever.

AND the grantors hereby covenant with said grantees that the grantors are lawfully seized of said land in fee simple; that the grantors have good right and lawful authority to sell and convey said land; that the grantors hereby fully warrant the title to said land and will defend the same against the lawful claims of all persons whomsoever; and that said land is free of all encumbrances, except easements, restrictions and reservations of record, if any, and taxes accruing subsequent to December 31, 2013.

IN WITNESS WHEREOF, grantors have hereunto set grantors' hands and seals the day and year first above written.

Signed, sealed and delivered in our presence:

Witness Name: KEVIN QUINN

Witness Name: Achilleas Varajon S

Collin Priestley

Kristin Priestley

State of Pennsylvania
County of Delaware

The foregoing instrument was acknowledged before me this 6th day of February, 2014 by Collin Priestley and Kristin Priestley, who [✓] are personally known or [ ] have produced a driver's license as identification.

[Notary Seal]

NOTARIAL SEAL
MAYA P ALAM-KHANDKAR
Notary Public
HAVERFORD TWP, DELAWARE CNTY
My Commission Expires Apr 7, 2014

Notary Public

Printed Name: Maya P Alam-Khandkar

My Commission Expires: 4/7/2014

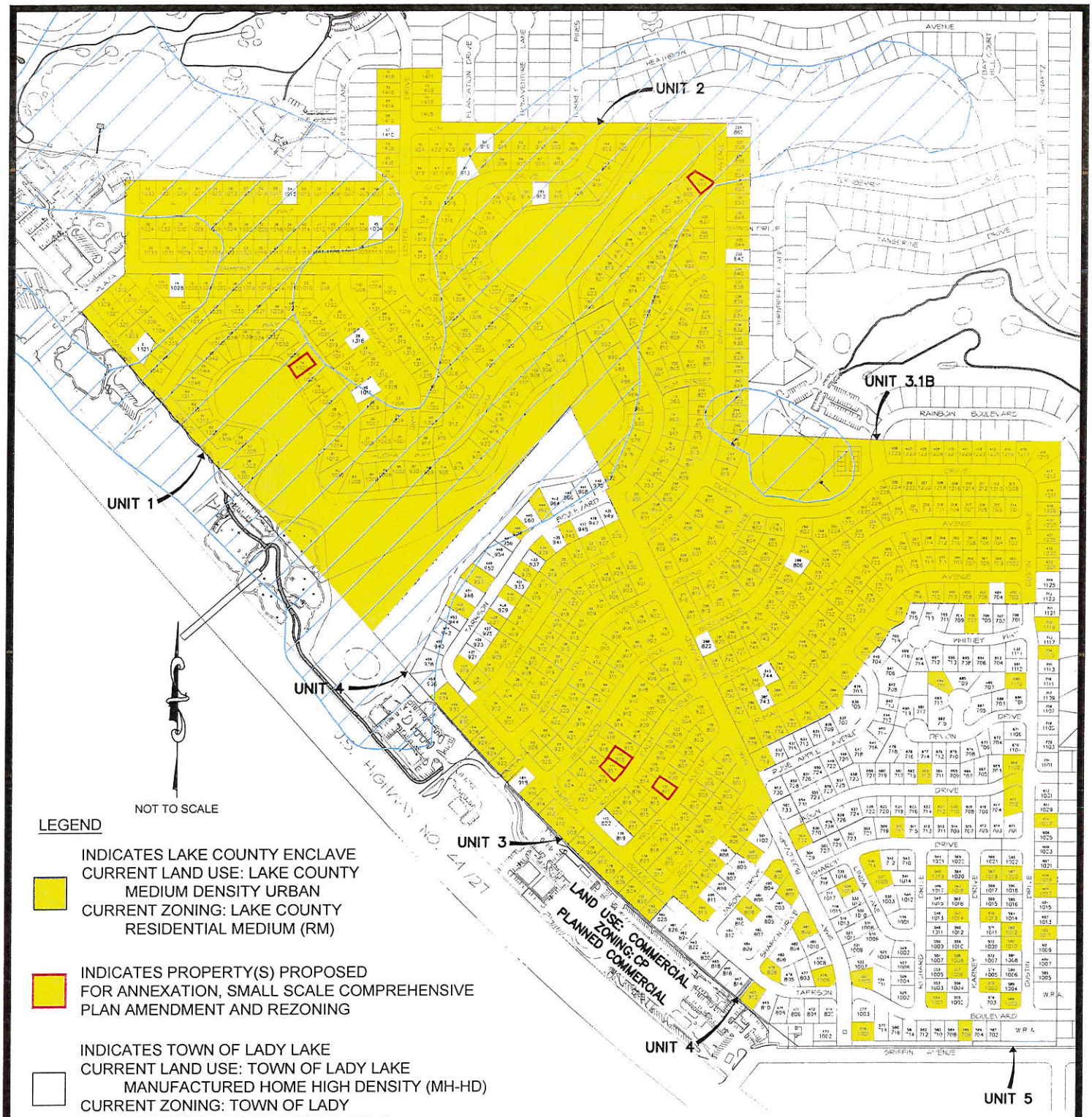

LEGEND

INDICATES LAKE COUNTY ENCLAVE
CURRENT LAND USE: LAKE COUNTY
MEDIUM DENSITY URBAN
CURRENT ZONING: LAKE COUNTY
RESIDENTIAL MEDIUM (RM)

INDICATES PROPERTY(S) PROPOSED
FOR ANNEXATION, SMALL SCALE COMPREHENSIVE
PLAN AMENDMENT AND REZONING

INDICATES TOWN OF LADY LAKE
CURRENT LAND USE: TOWN OF LADY LAKE
MANUFACTURED HOME HIGH DENSITY (MH-HD)
CURRENT ZONING: TOWN OF LADY
LAKE MIXED SINGLE FAMILY (MX-8)

FLOOD ZONE
MAP# 12069C0154E
PANEL 154 OF 750 (REVISED 12-18-12)

10 —— LOT NUMBER
100 —— 911 NUMBER

PROPOSED
ORANGE BLOSSOM GARDENS PROPERTIES
FOR
ANNEXATION, SMALL SCALE COMPREHENSIVE PLAN AMENDMENT AND REZONING

FEBRUARY 29, 2016

Arnett
Environmental, LLC
1038 Lake Sumter Landing The Villages, FL 32162
Tel No (352)753-4747 Fax No (352)753-1296
Certificate of Authorization Number 27495

ZONING MAP

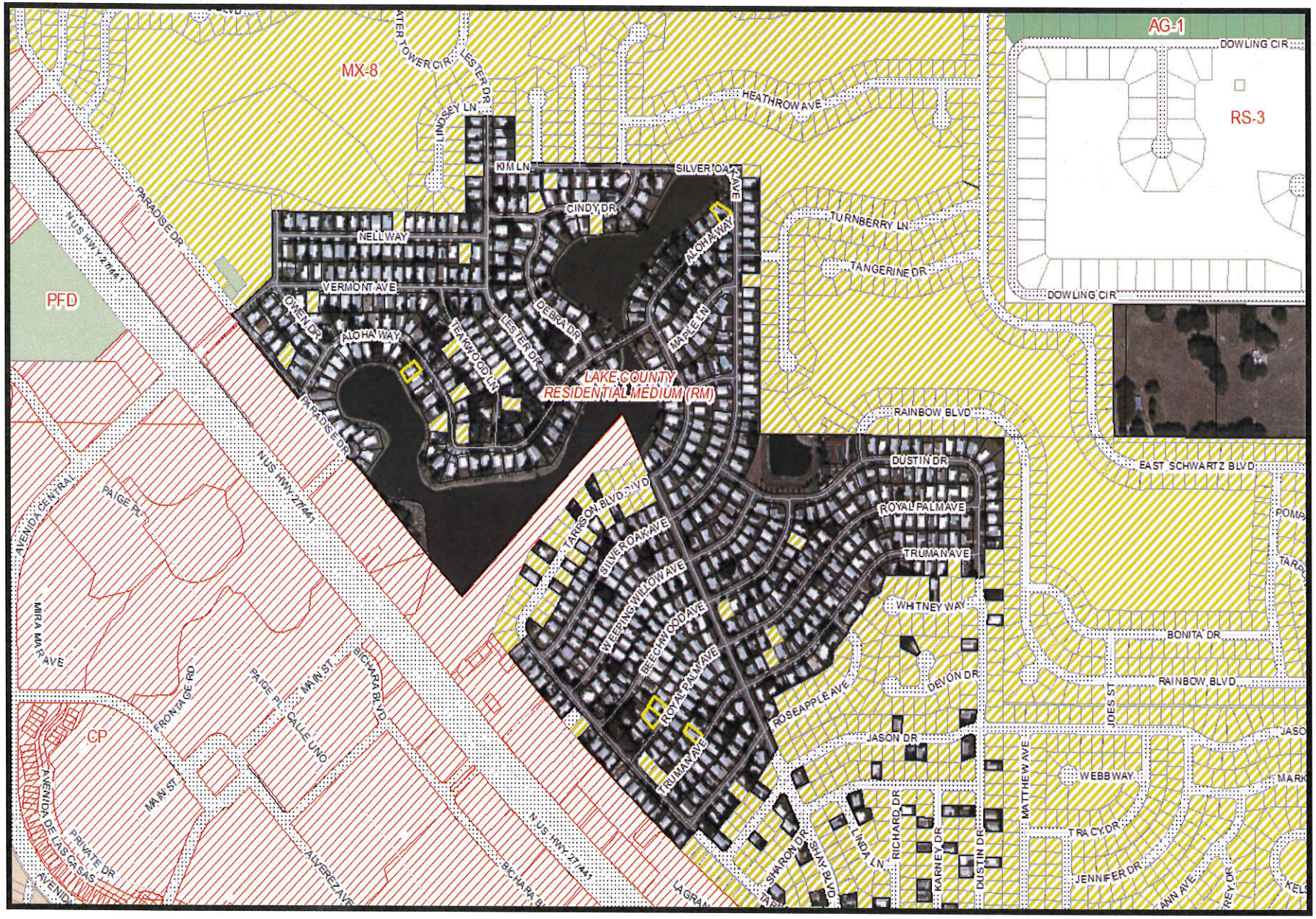
MX-8
AG-1
RS-3
PFD
CP
LAKE COUNTY
RESIDENTIAL MEDIUM (RM)
DOWLING CIR
HEATHROW AVE
LINDSEY LN
LESTER DR
KIM LN
SILVER OAK AVE
CINDY DR
NELL WAY
VERMONT AVE
OWEN DR
ALOHA WAY
TEAKWOOD LN
DEBRA DR
MAPLE LN
TURNBERRY LN
TANGERINE DR
PARADISE DR
N US HWY 27/441
RAINBOW BLVD
EAST SCHWARTZ BLVD
DUSTIN DR
ROYAL PALM AVE
TRUMAN AVE
TARPON BLVD
WEEPING WILLOW AVE
BEECHWOOD AVE
WHITNEY WAY
BONITA DR
DEVON DR
ROSEAPPLE AVE
JASON DR
WEBB WAY
TRACY DR
JENNIFER DR
MATTHEW AVE
JOES ST
SHARON DR
SHAY BLVD
LINDA LN
RICHARD DR
KARNEY DR
ANN AVE
AVENIDA CENTRAL
PAIGE PL
MIRA MAR AVE
FRONTAGE RD
MAIN ST
CALLE UNO
BICHARA BLVD
AVENIDA DE LAS CASAS
PRIVATE DR
ALVEREZ AVE
LAGRAN

CFN 2005111288
Bk 02895 Pg 0357; (1pg)
DATE: 07/20/2005 03:55:21 PM
JAMES C. WATKINS, CLERK OF COURT
LAKE COUNTY
RECORDING FEES 10.00
DEED DOC 777.00

Prepared by and return to:
R. Dewey Burnsed/mis
Attorney at Law
McLin & Burnsed PA
1028 Lake Sumter Landing
The Villages, FL 32162
File No.: PV0742

10
777
787

[Space Above This Line For Recording Data]

Warranty Deed

This Warranty Deed made this **14th** day of **July, 2005** between **Lester K. Wortman, a married man, joined by his wife, Mary L. Wortman**, whose post office address is **5 Gateshead Drive, Apt 212, Dunedin, FL 34698**, grantor, and **Pamela A. Barsness, a single woman**, whose post office address is **22 Summerside Lane, Hyannis, MA 02601** grantee:

(Whenever used herein the terms "grantor" and "grantee" include all the parties to this instrument and the heirs, legal representatives, and assigns of individuals, and the successors and assigns of corporations, trusts and trustees)

WITNESSETH, that said grantor, for and in consideration of the sum of TEN AND NO/100 DOLLARS ($10.00) and other good and valuable considerations to said grantor in hand paid by said grantee, the receipt whereof is hereby acknowledged, has granted, bargained, and sold to the said grantee, and grantee's heirs and assigns forever, the following described land, situate, lying and being in **Lake County Florida** to-wit:

PARCEL ID #: 0618240350-000-19400

Lot 194, Unit 3.1B, Orange Blossom Gardens, according to the plat thereof recorded in Plat Book 25, Pages 33 through 35, Public Records of Lake County, Florida. MK
A 1985 SHORLINE SHERWOOD 48' Manufactured Home, ID No. N12211, Title No. 22934874, and RP No. R198066.

TOGETHER with all the tenements, hereditaments and appurtenances thereto belonging or in anywise appertaining.

TO HAVE AND TO HOLD, the same in fee simple forever.

AND the grantor hereby covenants with said grantee that the grantor is lawfully seized of said land in fee simple; that the grantor has good right and lawful authority to sell and convey said land; that the grantor hereby fully warrants the title to said land and will defend the same against the lawful claims of all persons whomsoever; and that said land is free of all encumbrances, except easements, restrictions and reservations of record, if any, and taxes accruing subsequent to December 31, 2004.

IN WITNESS WHEREOF, grantor has hereunto set grantor's hand and seal the day and year first above written.

Signed, sealed and delivered in our presence:

Witness Name: Tara Popham
Lester K. Wortman (Seal)
Lester K. Wortman

Witness Name: A. Renée Fleisch
Mary L. Wortman (Seal)
Mary L. Wortman

State of Florida
County of Pinellas

The foregoing instrument was acknowledged before me this 14th day of July, 2005 by Lester K. Wortman, a married man, joined by his wife, Mary L. Wortman, who [_] is personally known or [X] has produced a driver's license as identification.

[Notary Seal]

MARY K. BROTMAN
Notary Public - State of Florida
My Commission Expires Apr 12, 2009
Commission # DD 418039

Notary Public, State of Florida MK
Printed Name: MARY K. BROTMAN
My Commission Expires: 4/12/09

INSTRUMENT#: 2015135117 OR BK 4717 PG 515 PAGES: 1 12/15/2015 12:37:42 PM
NEIL KELLY, LAKE COUNTY CLERK OF THE CIRCUIT COURT
REC FEES: $10.00 DEED DOC:$399.00

RETURN

Prepared by and return to:
Gary Fuchs/tn
Attorney at Law
McLin Burnsed
1028 Lake Sumter Landing
The Villages, FL 32162
File No.: **P07618**

Rec 10
Doc
Int

[Space Above This Line For Recording Data]

Warranty Deed

This Warranty Deed made this **10th** day of **December, 2015** between **Elizabeth K. Miller, a single woman,** whose post office address is **290 W. Calle Montero, Sahuarita, AZ 85629**, grantor, and **The Villages of Lake-Sumter, Inc., a Florida corporation**, whose post office address is **1020 Lake Sumter Landing, The Villages, FL 32162** grantee:

(Whenever used herein the terms "grantor" and "grantee" include all the parties to this instrument and the heirs, legal representatives, and assigns of individuals, and the successors and assigns of corporations, trusts and trustees)

WITNESSETH, that said grantor, for and in consideration of the sum of TEN AND NO/100 DOLLARS ($10.00) and other good and valuable considerations to said grantor in hand paid by said grantee, the receipt whereof is hereby acknowledged, has granted, bargained, and sold to the said grantee, and grantee's heirs and assigns forever, the following described land, situate, lying and being in **Lake County, Florida** to-wit:

PARCEL ID #: 0618240300-000-11000

Lot 110, Unit 3, Orange Blossom Gardens, according to the plat thereof recorded in Plat Book 23, Pages 27 through 29, Public Records of Lake County, Florida.

Together with a 1985 SHORLINE Manufactured Home, ID# N12227A & # N12227B, Florida Title 41037285 & 41037286 bearing Real Property Decals # R224877 & # R224878 which is an improvement to the land and an immovable fixture, and by intention of the parties and upon retirement of the Certificate of Title as provided in Florida Statutes 319.261, shall constitute a part of the realty and shall pass with it.

TOGETHER with all the tenements, hereditaments and appurtenances thereto belonging or in anywise appertaining.

TO HAVE AND TO HOLD, the same in fee simple forever.

AND the grantor hereby covenants with said grantee that the grantor is lawfully seized of said land in fee simple; that the grantor has good right and lawful authority to sell and convey said land; that the grantor hereby fully warrants the title to said land and will defend the same against the lawful claims of all persons whomsoever; and that said land is free of all encumbrances, except easements, restrictions and reservations of record, if any, and taxes accruing subsequent to December 31, 2015.

IN WITNESS WHEREOF, grantor has hereunto set grantor's hand and seal the day and year first above written.

Signed, sealed and delivered in our presence:

Teresa Norvell
Witness Name: Teresa Norvell

Elizabeth K. Miller
Elizabeth K. Miller

June Brine
Witness Name: June Brine

State of Florida
County of Lake

The foregoing instrument was acknowledged before me this 9th day of December, 2015 by Elizabeth K. Miller, a single woman, who [ ] is personally known or [X] has produced a driver's license as identification.

[Notary Seal]

TERESA NORVELL
MY COMMISSION # FF 130328
EXPIRES: June 8, 2018
Bonded Thru Budget Notary Services

Teresa Norvell
Notary Public

Printed Name:

My Commission Expires:

INSTRUMENT#: 2016012973 OR BK 4737 PG 2162 PAGES: 1 2/5/2016 8:46:58 AM
NEIL KELLY, LAKE COUNTY CLERK OF THE CIRCUIT COURT
REC FEES: $10.00 DEED DOC:$455.00

105000

RETURN

Prepared by and return to:
Gary Fuchs/sss
Attorney at Law
McLin Burnsed
1028 Lake Sumter Landing
The Villages, FL 32162
File No.: **P08192**

Ex: ____
Rec: 0
Doc: ____
Int: ____
Tot: ____

[Space Above This Line For Recording Data]

Warranty Deed

This Warranty Deed made this **27th** day of **January, 2016** between **Luigi Tortu and Theresa Tortu, husband and wife**, whose post office address is **13517 NE 86th Court, Apt 125, Lady Lake, FL 32159**, grantor, and **The Villages of Lake-Sumter, Inc., a Florida corporation**, whose post office address is **1020 Lake Sumter Landing, The Villages, FL 32162** grantee:

(Whenever used herein the terms "grantor" and "grantee" include all the parties to this instrument and the heirs, legal representatives, and assigns of individuals, and the successors and assigns of corporations, trusts and trustees)

WITNESSETH, that said grantor, for and in consideration of the sum of TEN AND NO/100 DOLLARS ($10.00) and other good and valuable considerations to said grantor in hand paid by said grantee, the receipt whereof is hereby acknowledged, has granted, bargained, and sold to the said grantee, and grantee's heirs and assigns forever, the following described land, situate, lying and being in **Lake County, Florida** to-wit:

PARCEL ID #: 0618240300-000-11100

Lot 111, ORANGE BLOSSOM GARDENS UNIT NO. 3, according to the map or plat thereof as recorded in Plat Book 23, Page 27, Public Records of Lake County, Florida.

Together with a 1984 PALM Manufactured Home, ID# 23630124AT & # 23630124BT, Florida Title 20621195 & 22532318 bearing Real Property Decals # R079979 & # R079980 which is an improvement to the land and an immovable fixture, and by intention of the parties and upon retirement of the Certificate of Title as provided in Florida Statutes 319.261, shall constitute a part of the realty and shall pass with it.

TOGETHER with all the tenements, hereditaments and appurtenances thereto belonging or in anywise appertaining.

TO HAVE AND TO HOLD, the same in fee simple forever.

AND the grantor hereby covenants with said grantee that the grantor is lawfully seized of said land in fee simple; that the grantor has good right and lawful authority to sell and convey said land; that the grantor hereby fully warrants the title to said land and will defend the same against the lawful claims of all persons whomsoever; and that said land is free of all encumbrances, except easements, restrictions and reservations of record, if any, and taxes accruing subsequent to December 31, 2015.

IN WITNESS WHEREOF, grantor has hereunto set grantor's hand and seal the day and year first above written.

Signed, sealed and delivered in our presence:

Witness Name: Rene Webster

Witness Name: Stacy Spears

Luigi Tortu
Luigi Tortu

Theresa Tortu
Theresa Tortu

State of Florida
County of Lake

The foregoing instrument was acknowledged before me this 27th day of January, 2016 by Luigi Tortu and Theresa Tortu, husband and wife, who [_] are personally known or [X] have produced a driver's license as identification.

[Notary Seal]

Notary Public

Printed Name: STACY S. SPEARS

My Commission Expires: MY COMMISSION # FF 072774 EXPIRES: December 26, 2017 Bonded Thru Budget Notary Services

INSTRUMENT#: 2016001224 OR BK 4724 PG 2074 PAGES: 1 1/6/2016 9:58:22 AM
NEIL KELLY, LAKE COUNTY CLERK OF THE CIRCUIT COURT
REC FEES: $10.00 DEED DOC:$504.00

7200 RETURN

Prepared by and return to:
Gary Fuchs/jg
Attorney at Law
McLin Burnsed
1028 Lake Sumter Landing
The Villages, FL 32162
File No.: **P08061**

Ent
Rec
Doc
Int
Total

[Space Above This Line For Recording Data]

Warranty Deed

This Warranty Deed made this **22nd** day of **December, 2015** between **Herman Guenot, a single man,** whose post office address is **11017 SE 174th Lane, Summerfield, FL 34491**, grantor, and **The Villages of Lake-Sumter, Inc., a Florida corporation**, whose post office address is **1020 Lake Sumter Landing, The Villages, FL 32162** grantee:

(Whenever used herein the terms "grantor" and "grantee" include all the parties to this instrument and the heirs, legal representatives, and assigns of individuals, and the successors and assigns of corporations, trusts and trustees)

WITNESSETH, that said grantor, for and in consideration of the sum of TEN AND NO/100 DOLLARS ($10.00) and other good and valuable considerations to said grantor in hand paid by said grantee, the receipt whereof is hereby acknowledged, has granted, bargained, and sold to the said grantee, and grantee's heirs and assigns forever, the following described land, situate, lying and being in **Lake County, Florida** to-wit:

PARCEL ID #: 0618240300-000-13100

Lot 131, Unit 3, Orange Blossom Gardens, according to the plat thereof recorded in Plat Book 23, Pages 27 through 29, Public Records of Lake County, Florida.

Together with the Manufactured Home, bearing VIN # 0261258K thereon. The Titles have been retired.

TOGETHER with all the tenements, hereditaments and appurtenances thereto belonging or in anywise appertaining.

TO HAVE AND TO HOLD, the same in fee simple forever.

AND the grantor hereby covenants with said grantee that the grantor is lawfully seized of said land in fee simple; that the grantor has good right and lawful authority to sell and convey said land; that the grantor hereby fully warrants the title to said land and will defend the same against the lawful claims of all persons whomsoever; and that said land is free of all encumbrances, except easements, restrictions and reservations of record, if any, and taxes accruing subsequent to December 31, 2015.

IN WITNESS WHEREOF, grantor has hereunto set grantor's hand and seal the day and year first above written.

Signed, sealed and delivered in our presence:

Witness Name: Jennifer Grovesteen

Witness Name: JANICE S. SCHOENFELDT

Herman Guenot

State of Florida
County of Lake

The foregoing instrument was acknowledged before me this 22nd day of December, 2015 by Herman Guenot, a single man, who [_] is personally known or [X] has produced a driver's license as identification.

[Notary Seal]

JENNIFER GROVESTEEN
MY COMMISSION # FF 907224
EXPIRES: December 5, 2019
Bonded Thru Budget Notary Services

Notary Public

Printed Name: Jennifer Grovesteen

My Commission Expires: 12/5/2019

SCALE: 1/16"=1'

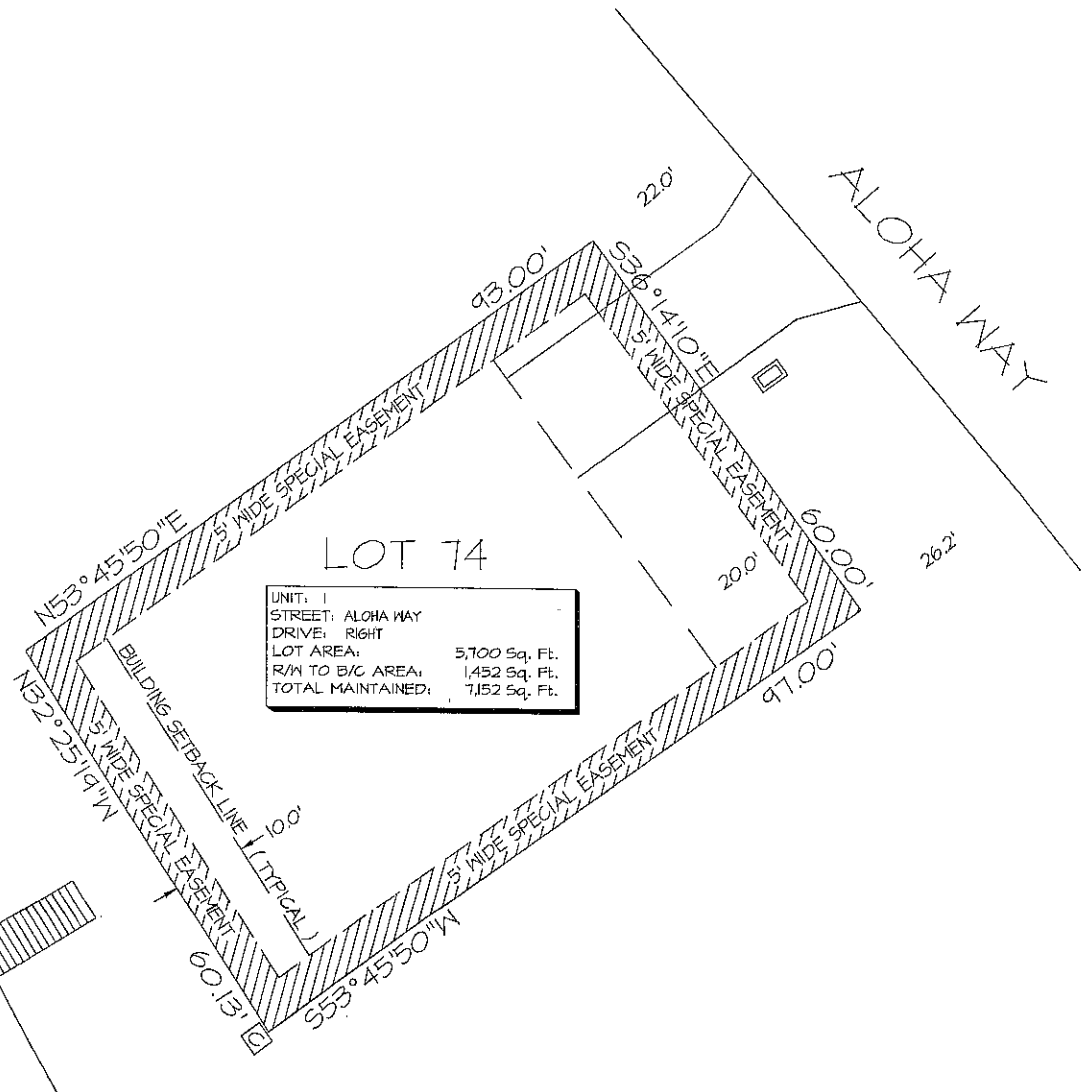

LEGEND:

- WATER METER
- IRRIGATION METER
- STREET LIGHT
- (P) INDICATES PLAT
- (M) INDICATES MEASURED
- C CABLE T.V. PEDESTAL / 7" OR 9" ROUND
- T TELEPHONE PEDESTAL / 4" OR 12" ROUND
- E ELECTRIC PEDESTAL / 20"X20" PAD
- X ELECTRIC TRANSFORMER / 3'X3' PAD
- A ELECTRIC FEED THROUGH CABINET
- UV UTILITY VAULT
- WATER VALVE
- FIRE HYDRANT
- STORM INLET
- VALLEY GUTTER INLET
- CATCH BASIN
- MANHOLE
- LINE EXTENDER PEDESTAL / 12"X30"X14"
- TRUNK-AMP PEDESTAL / 17"X30"X14"
- SWITCH GEAR / 7' X 7'
- PS POWER SUPPLY / 20"x28"x38"
- x——x BOARD / STOCKADE / PVC FENCE

NOTE: EASEMENTS AND RIGHT OF WAYS IN FAVOR OF THE DEVELOPER ARE HEREBY RESERVED FOR THE CONSTRUCTION, INSTALLATION AND MAINTENANCE OF UTILITIES SUCH AS ELECTRIC LIGHT LINES, SANITARY, SEWER, STORM DRAINAGE, WATER LINES, CABLEVISION TELEPHONE, RECREATION FACILITIES AND TELEGRAPH LINES OR THE LIKE. THESE THIRD PARTY UTILITY PROVIDERS UTILIZING SUCH EASEMENT AREA COVENANT, AS A CONDITION OF THE RIGHT TO USE SUCH EASEMENT, NOT TO INTERFERE OR DISTURB SUCH EQUIPMENT INSTALLED WITHIN THE EASEMENT AREA. ALL UTILITY PROVIDERS ARE RESPONSIBLE FOR REPAIRING THE GRADING AND LANDSCAPE BEING DISTURBED PURSUANT TO ANY UTILIZATION OF SUCH EASEMENTS. HOWEVER, THESE UTILITY PROVIDERS MAY USE ABOVE GROUND JUNCTION BOXES, PEDESTALS, SPLICE BOXES AND ETC. FOR THEIR UTILITIES AND THE DEVELOPER IS WITHOUT KNOWLEDGE AS TO THE SPECIFIC LOCATION WITHIN THE EASEMENTS AND RIGHT OF WAYS THAT THESE UTILITY PROVIDERS MAY PLACE THESE ABOVE GROUND ITEMS IN THE FUTURE.

THIS IS NOT A SURVEY

THIS SKETCH IS INTENDED TO SHOW PERTINENT INFORMATION FOR THE SUBJECT LOT AS SHOWN HEREON.
THE INFORMATION SHOWN HAS BEEN OBTAINED THROUGH PRELIMINARY PLAT, FIELD MEASUREMENTS AND CONSTRUCTION PLANS AS SUBMITTED BY THE VARIOUS UTILITY COMPANIES (UTILITY LOCATIONS ARE SUBJECT TO CHANGE).
THE VILLAGES OF LAKE-SUMTER, INC. ORANGE BLOSSOM GARDENS, ARNETT ENVIRONMENTAL AND/OR ANY AFFILIATES THEREOF ARE NOT RESPONSIBLE OR LIABLE FOR ACCURACY OR CORRECTNESS OF THE INFORMATION AS SHOWN ON THIS SKETCH.

CUSTOMER SIGNATURE: _____ DATE: _____

CUSTOMER SIGNATURE: _____ DATE: _____

The Villages

Arnett Environmental, LLC
1034 Lake Sumter Landing The Villages, FL 32162
Tel No. (352)753-1747 Fax No. (352)753-1289
Certificate of Authorization Number: 27685

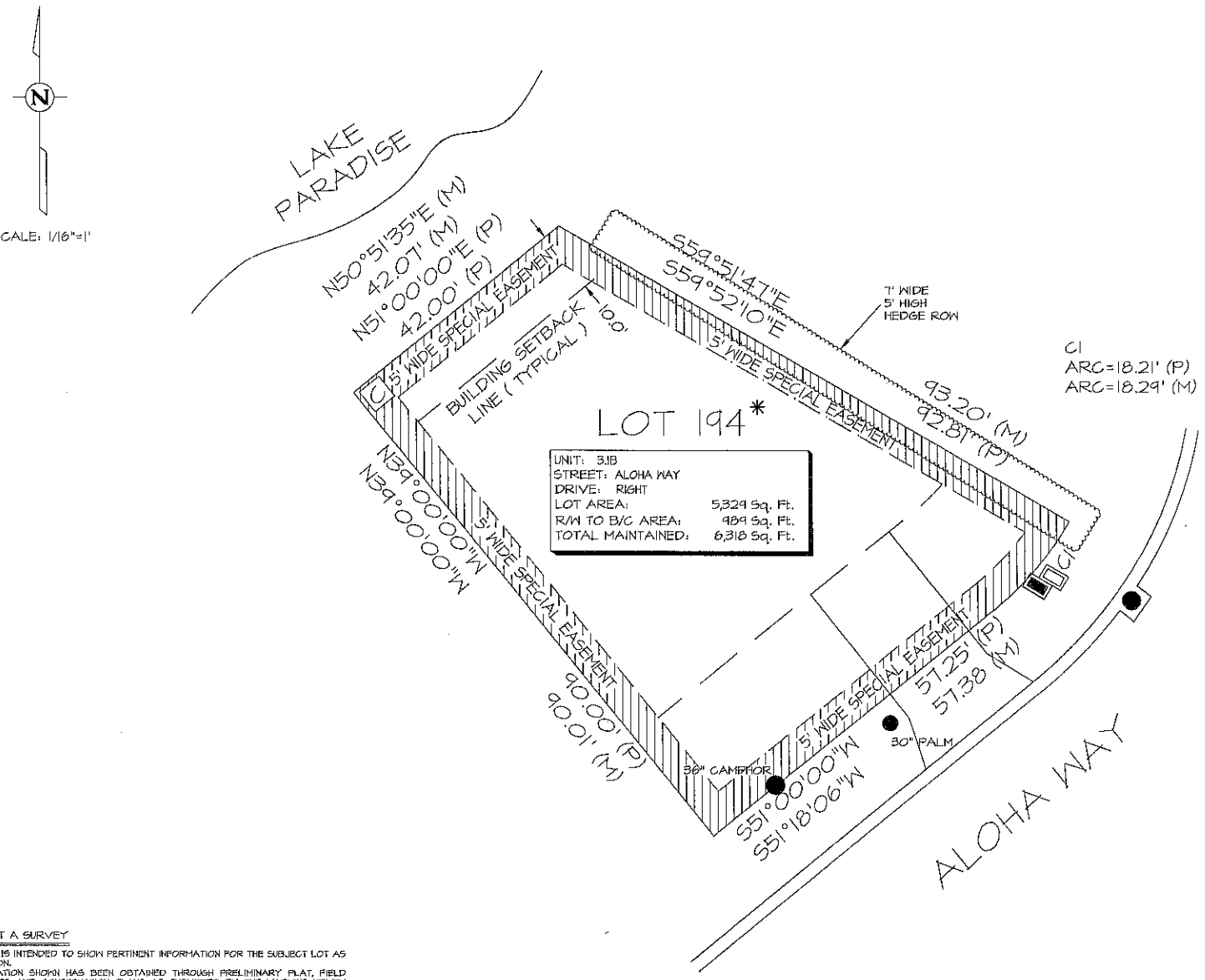

LEGEND :

- WATER METER
- IRRIGATION METER
- STREET LIGHT
- (P) INDICATES PLAT
- (M) INDICATES MEASURED
- CABLE T.V. PEDESTAL / 7" OR 4" ROUND
- TELEPHONE PEDESTAL / 4" OR 12" ROUND
- ELECTRIC PEDESTAL / 20"X20" PAD
- ELECTRIC TRANSFORMER / 3'X3' PAD
- ELECTRIC FEED THROUGH CABINET
- UTILITY VAULT
- WATER VALVE
- FIRE HYDRANT
- STORM INLET
- VALLEY GUTTER INLET
- CATCH BASIN
- MANHOLE
- LINE EXTENDER PEDESTAL / 12"X30"X14"
- TRUNK-AMP PEDESTAL / 17"X30"X14"
- SWITCH GEAR / 7' X 7'
- POWER SUPPLY / 20"x28"x58"
- BOARD / STOCKADE / PVC FENCE

NOTE: EASEMENTS AND RIGHT OF WAYS IN FAVOR OF THE DEVELOPER ARE HEREBY RESERVED FOR THE CONSTRUCTION, INSTALLATION AND MAINTENANCE OF UTILITIES SUCH AS ELECTRIC LIGHT LINES, SANITARY, SEWER, STORM DRAINAGE, WATER LINES, CABLEVISION TELEPHONE, RECREATION FACILITIES AND TELEGRAPH LINES OR THE LIKE. THESE THIRD PARTY UTILITY PROVIDERS UTILIZING SUCH EASEMENT AREA COVENANT, AS A CONDITION OF THE RIGHT TO USE SUCH EASEMENT, NOT TO INTERFERE OR DISTURB SUCH EQUIPMENT INSTALLED WITHIN THE EASEMENT AREA. ALL UTILITY PROVIDERS ARE RESPONSIBLE FOR REPAIRING THE GRADING AND LANDSCAPE BEING DISTURBED PURSUANT TO ANY UTILIZATION OF SUCH EASEMENTS. HOWEVER, THESE UTILITY PROVIDERS MAY USE ABOVE GROUND JUNCTION BOXES, PEDESTALS, SPLICE BOXES AND ETC. FOR THEIR UTILITIES AND THE DEVELOPER IS WITHOUT KNOWLEDGE AS TO THE SPECIFIC LOCATION WITHIN THE EASEMENTS AND RIGHT OF WAYS THAT THESE UTILITY PROVIDERS MAY PLACE THESE ABOVE GROUND ITEMS IN THE FUTURE.

* SPECIAL FLOOR PLAN HOME SITE

THIS IS NOT A SURVEY

THIS SKETCH IS INTENDED TO SHOW PERTINENT INFORMATION FOR THE SUBJECT LOT AS SHOWN HEREON.
THE INFORMATION SHOWN HAS BEEN OBTAINED THROUGH PRELIMINARY PLAT, FIELD MEASUREMENTS AND CONSTRUCTION PLANS AS SUBMITTED BY THE VARIOUS UTILITY COMPANIES (UTILITY LOCATIONS ARE SUBJECT TO CHANGE).
THE VILLAGES OF LAKE-SUMTER, INC. ORANGE BLOSSOM GARDENS, ARNETT ENVIRONMENTAL AND/OR ANY AFFILIATES THEREOF ARE NOT RESPONSIBLE OR LIABLE FOR ACCURACY OR CORRECTNESS OF THE INFORMATION AS SHOWN ON THIS SKETCH.

CUSTOMER SIGNATURE: _____ DATE: _____

CUSTOMER SIGNATURE: _____ DATE: _____

The Villages

Arnett Environmental, LLC
1038 Lake Sumter Landing The Villages, FL 32162
Tel No. (352)753-4747 Fax No. (352)753-1388
Certificate of Authorization Number: 27455

SCALE: 1/16"=1'

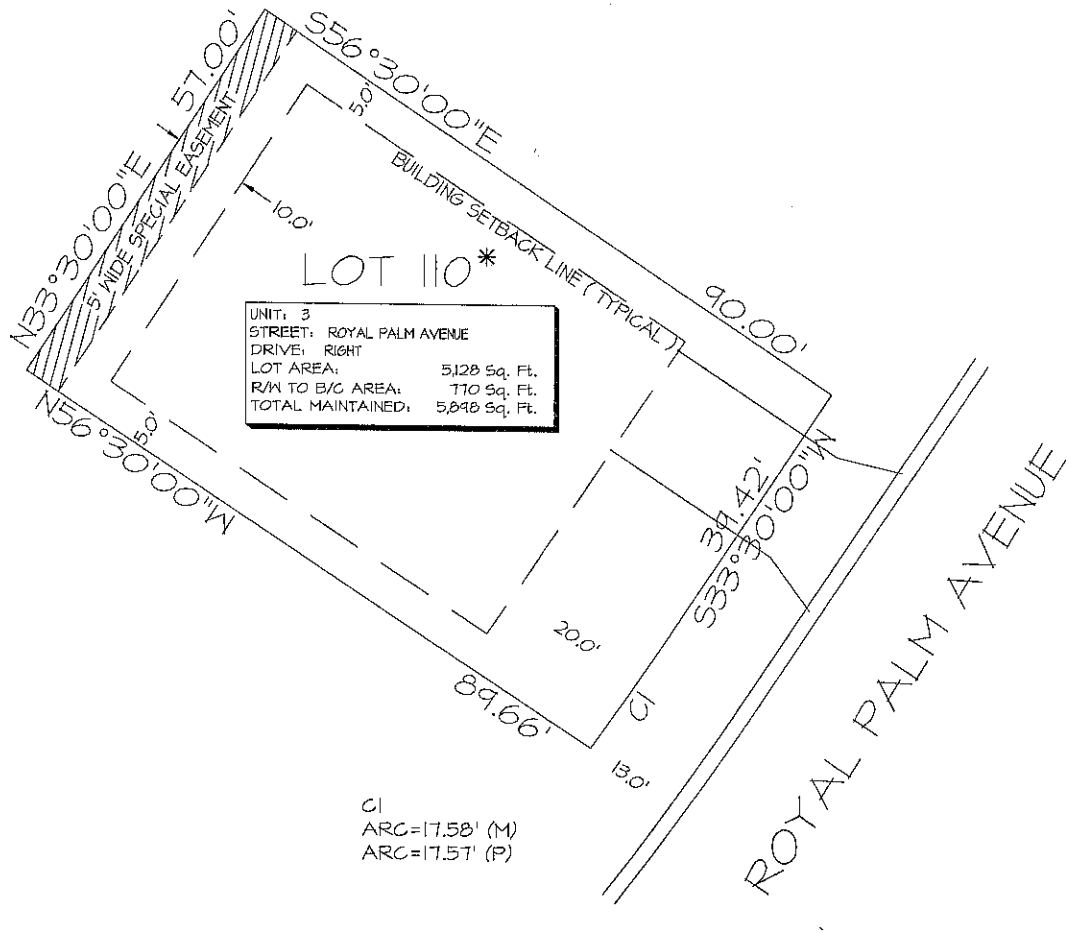

LEGEND :

- WATER METER
- IRRIGATION METER
- STREET LIGHT
- (P) INDICATES PLAT
- (M) INDICATES MEASURED
- CABLE T.V. PEDESTAL / 7" OR 4" ROUND
- TELEPHONE PEDESTAL / 4" OR 12" ROUND
- ELECTRIC PEDESTAL / 20"X20" PAD
- ELECTRIC TRANSFORMER / 3'X3' PAD
- ELECTRIC FEED THROUGH CABINET
- UTILITY VAULT
- WATER VALVE
- FIRE HYDRANT
- STORM INLET
- VALLEY GUTTER INLET
- CATCH BASIN
- MANHOLE
- LINE EXTENDER PEDESTAL / 12"X30"X14"
- TRUNK-AMP PEDESTAL / 17"X30"X14"
- SWITCH GEAR / 7' X 7'
- POWER SUPPLY / 20"X28"X58"
- BOARD / STOCKADE / PVC FENCE

NOTE: EASEMENTS AND RIGHT OF WAYS IN FAVOR OF THE DEVELOPER ARE HEREBY RESERVED FOR THE CONSTRUCTION, INSTALLATION AND MAINTENANCE OF UTILITIES SUCH AS ELECTRIC LIGHT LINES, SANITARY, SEWER, STORM DRAINAGE, WATER LINES, CABLEVISION TELEPHONE, RECREATION FACILITIES AND TELEGRAPH LINES OR THE LIKE. THESE THIRD PARTY UTILITY PROVIDERS UTILIZING SUCH EASEMENT AREA COVENANT, AS A CONDITION OF THE RIGHT TO USE SUCH EASEMENT, NOT TO INTERFERE OR DISTURB SUCH EQUIPMENT INSTALLED WITHIN THE EASEMENT AREA. ALL UTILITY PROVIDERS ARE RESPONSIBLE FOR REPAIRING THE GRADING AND LANDSCAPE BEING DISTURBED PURSUANT TO ANY UTILIZATION OF SUCH EASEMENTS. HOWEVER, THESE UTILITY PROVIDERS MAY USE ABOVE GROUND JUNCTION BOXES, PEDESTALS, SPLICE BOXES AND ETC. FOR THEIR UTILITIES AND THE DEVELOPER IS WITHOUT KNOWLEDGE AS TO THE SPECIFIC LOCATION WITHIN THE EASEMENTS AND RIGHT OF WAY'S THAT THESE UTILITY PROVIDERS MAY PLACE THESE ABOVE GROUND ITEMS IN THE FUTURE.

* SPECIAL FLOOR PLAN HOME SITE

THIS IS NOT A SURVEY

THIS SKETCH IS INTENDED TO SHOW PERTINENT INFORMATION FOR THE SUBJECT LOT AS SHOWN HEREON.
THE INFORMATION SHOWN HAS BEEN OBTAINED THROUGH PRELIMINARY PLAT, FIELD MEASUREMENTS AND CONSTRUCTION PLANS AS SUBMITTED BY THE VARIOUS UTILITY COMPANIES (UTILITY LOCATIONS ARE SUBJECT TO CHANGE).
THE VILLAGES OF LAKE-SUMTER, INC. ORANGE BLOSSOM GARDENS, ARNETT ENVIRONMENTAL AND/OR ANY AFFILIATES THEREOF ARE NOT RESPONSIBLE OR LIABLE FOR ACCURACY OR CORRECTNESS OF THE INFORMATION AS SHOWN ON THIS SKETCH.

CUSTOMER SIGNATURE: _____ DATE: _____

CUSTOMER SIGNATURE: _____ DATE: _____

The Villages

Arnett Environmental, LLC
1008 Lake Sumter Landing The Villages, FL 32162
Tel No. (352)259-4740 Fax No. (352)750-1298
Certificate of Authorization Number: 27466

SCALE: 1/16"=1'

L1=N45°28'17"E, 25.44'
L2=N33°30'00"E, 33.41'

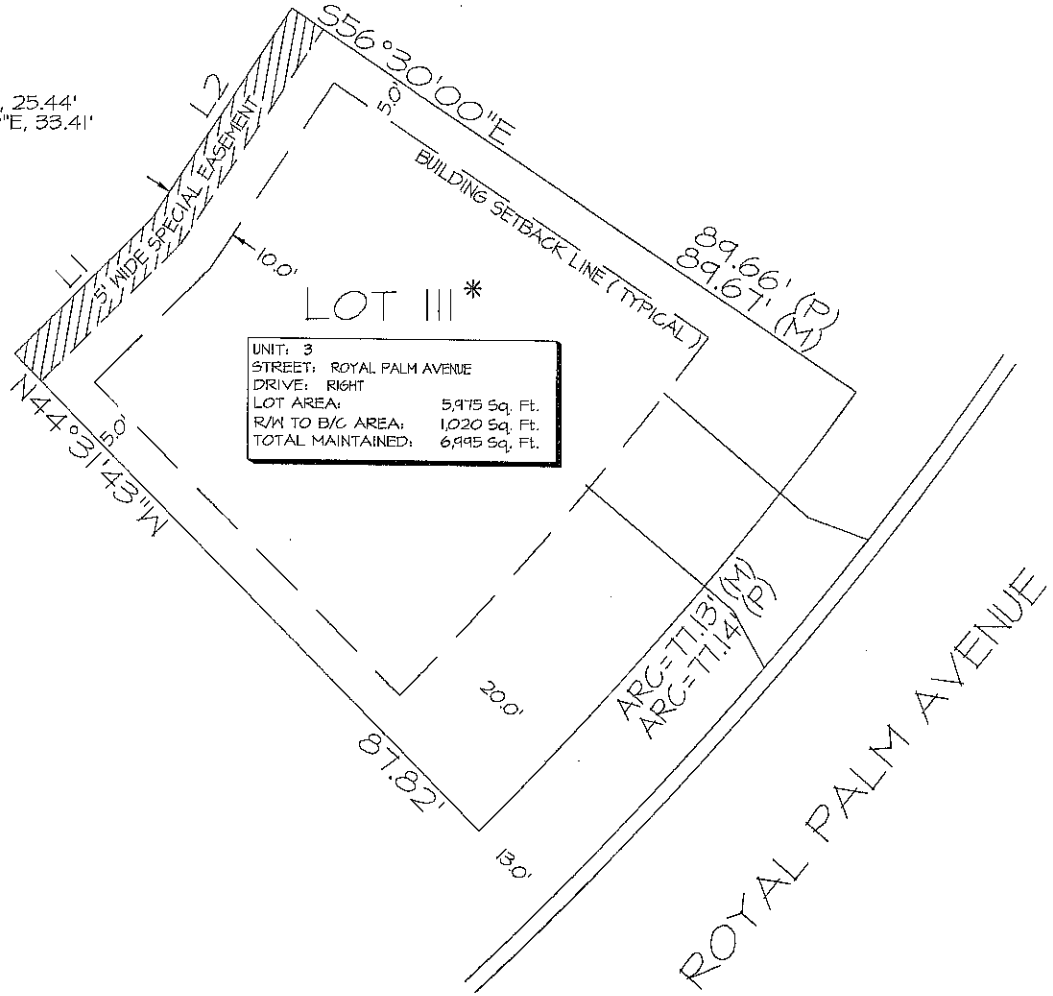

LEGEND :

- WATER METER
- IRRIGATION METER
- STREET LIGHT
- (P) INDICATES PLAT
- (M) INDICATES MEASURED
- CABLE T.V. PEDESTAL / 7" OR 9" ROUND
- TELEPHONE PEDESTAL / 4" OR 12" ROUND
- ELECTRIC PEDESTAL / 20"X20" PAD
- ELECTRIC TRANSFORMER / 5'X3' PAD
- ELECTRIC FEED THROUGH CABINET
- UTILITY VAULT
- WATER VALVE
- FIRE HYDRANT
- STORM INLET
- VALLEY GUTTER INLET
- CATCH BASIN
- MANHOLE
- LINE EXTENDER PEDESTAL / 12"X30"X14"
- TRUNK-AMP PEDESTAL / 17"X30"X14"
- SWITCH GEAR / 7' X 7'
- POWER SUPPLY / 20"x28"x58"
- BOARD / STOCKADE / PVC FENCE

NOTE: EASEMENTS AND RIGHT OF WAYS IN FAVOR OF THE DEVELOPER ARE HEREBY RESERVED FOR THE CONSTRUCTION, INSTALLATION AND MAINTENANCE OF UTILITIES SUCH AS ELECTRIC LIGHT LINES, SANITARY, SEWER, STORM DRAINAGE, WATER LINES, CABLEVISION TELEPHONE, RECREATION FACILITIES AND TELEGRAPH LINES OR THE LIKE. THESE THIRD PARTY UTILITY PROVIDERS UTILIZING SUCH EASEMENT AREA COVENANT, AS A CONDITION OF THE RIGHT TO USE SUCH EASEMENT, NOT TO INTERFERE OR DISTURB SUCH EQUIPMENT INSTALLED WITHIN THE EASEMENT AREA. ALL UTILITY PROVIDERS ARE RESPONSIBLE FOR REPAIRING THE GRADING AND LANDSCAPE BEING DISTURBED PURSUANT TO ANY UTILIZATION OF SUCH EASEMENTS. HOWEVER, THESE UTILITY PROVIDERS MAY USE ABOVE GROUND JUNCTION BOXES, PEDESTALS, SPLICE BOXES AND ETC. FOR THEIR UTILITIES AND THE DEVELOPER IS WITHOUT KNOWLEDGE AS TO THE SPECIFIC LOCATION WITHIN THE EASEMENTS AND RIGHT OF WAYS THAT THESE UTILITY PROVIDERS MAY PLACE THESE ABOVE GROUND ITEMS IN THE FUTURE.

* SPECIAL FLOOR PLAN HOME SITE

THIS IS NOT A SURVEY

THIS SKETCH IS INTENDED TO SHOW PERTINENT INFORMATION FOR THE SUBJECT LOT AS SHOWN HEREON.
THE INFORMATION SHOWN HAS BEEN OBTAINED THROUGH PRELIMINARY PLAT, FIELD MEASUREMENTS AND CONSTRUCTION PLANS AS SUBMITTED BY THE VARIOUS UTILITY COMPANIES (UTILITY LOCATIONS ARE SUBJECT TO CHANGE).
THE VILLAGES OF LAKE-SUMTER, INC. ORANGE BLOSSOM GARDENS, ARNETT ENVIRONMENTAL AND/OR ANY AFFILIATES THEREOF ARE NOT RESPONSIBLE OR LIABLE FOR ACCURACY OR CORRECTNESS OF THE INFORMATION AS SHOWN ON THIS SKETCH.

CUSTOMER SIGNATURE: _____ DATE: _____

CUSTOMER SIGNATURE: _____ DATE: _____

The Villages

Arnett Environmental, LLC
1034 Lake Sumter Landing The Villages, FL 32162
Tel No. (352)753-4747 Fax No. (352)753-1288
Certificate of Authorization Number: 27495

SCALE: 1/16"=1'

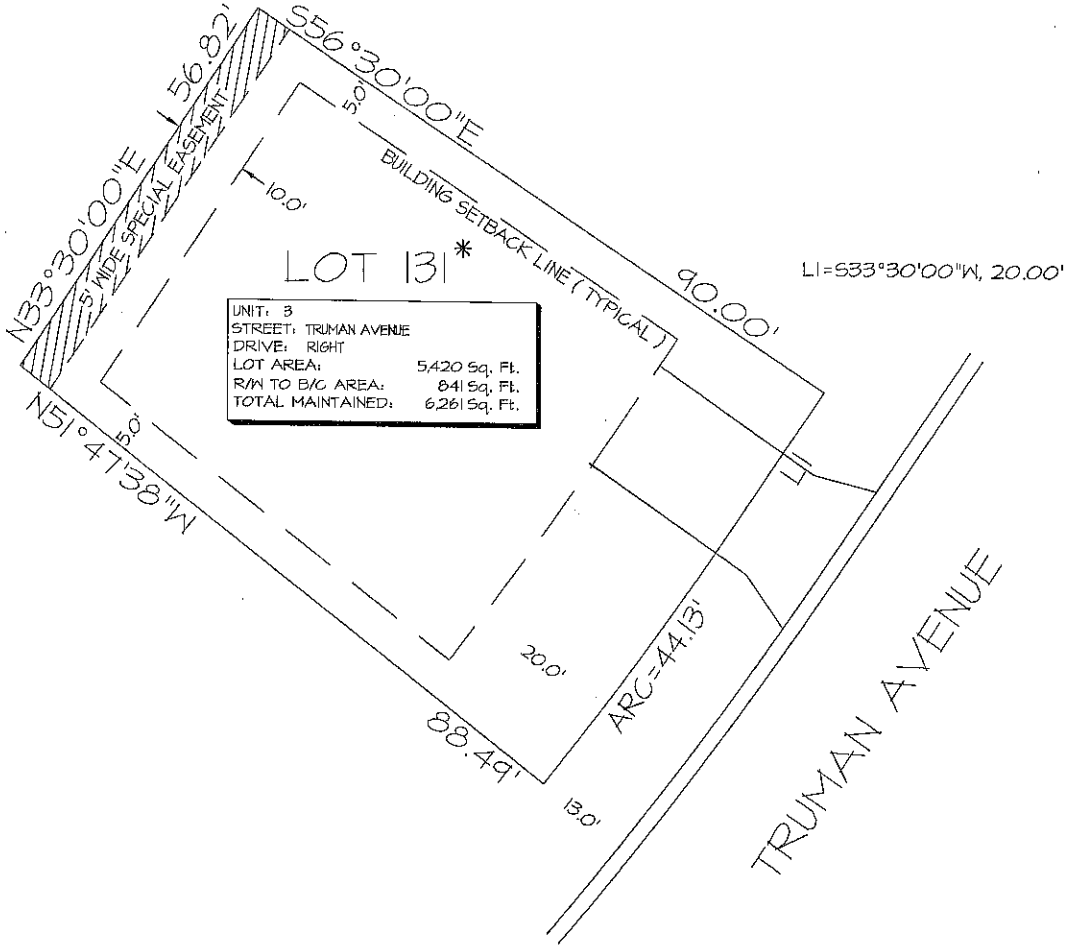

LEGEND :

- WATER METER
- IRRIGATION METER
- STREET LIGHT
- (P) INDICATES PLAT
- (M) INDICATES MEASURED
- CABLE T.V. PEDESTAL / 7" OR 9" ROUND
- TELEPHONE PEDESTAL / 4" OR 12" ROUND
- ELECTRIC PEDESTAL / 20"X20" PAD
- ELECTRIC TRANSFORMER / 3'X8' PAD
- ELECTRIC FEED THROUGH CABINET
- UTILITY VAULT
- WATER VALVE
- FIRE HYDRANT
- STORM INLET
- VALLEY GUTTER INLET
- CATCH BASIN
- MANHOLE
- LINE EXTENDER PEDESTAL / 12"X30"X14"
- TRUNK-AMP PEDESTAL / 17"X30"X14"
- SWITCH GEAR / 7' X 7'
- POWER SUPPLY / 20"x28"x58"
- x——x BOARD / STOCKADE / PVC FENCE

NOTE: EASEMENTS AND RIGHT OF WAYS IN FAVOR OF THE DEVELOPER ARE HEREBY RESERVED FOR THE CONSTRUCTION, INSTALLATION AND MAINTENANCE OF UTILITIES SUCH AS ELECTRIC LIGHT LINES, SANITARY, SEWER, STORM DRAINAGE, WATER LINES, CABLEVISION TELEPHONE, RECREATION FACILITIES AND TELEGRAPH LINES OR THE LIKE. THESE THIRD PARTY UTILITY PROVIDERS UTILIZING SUCH EASEMENT AREA COVENANT, AS A CONDITION OF THE RIGHT TO USE SUCH EASEMENT, NOT TO INTERFERE OR DISTURB SUCH EQUIPMENT INSTALLED WITHIN THE EASEMENT AREA. ALL UTILITY PROVIDERS ARE RESPONSIBLE FOR REPAIRING THE GRADING AND LANDSCAPE BEING DISTURBED PURSUANT TO ANY UTILIZATION OF SUCH EASEMENTS. HOWEVER, THESE UTILITY PROVIDERS MAY USE ABOVE GROUND JUNCTION BOXES, PEDESTALS, SPLICE BOXES AND ETC. FOR THEIR UTILITIES AND THE DEVELOPER IS WITHOUT KNOWLEDGE AS TO THE SPECIFIC LOCATION WITHIN THE EASEMENTS AND RIGHT OF WAYS THAT THESE UTILITY PROVIDERS MAY PLACE THESE ABOVE GROUND ITEMS IN THE FUTURE.

* SPECIAL FLOOR PLAN HOME SITE

THIS IS NOT A SURVEY

THIS SKETCH IS INTENDED TO SHOW PERTINENT INFORMATION FOR THE SUBJECT LOT AS SHOWN HEREON.
THE INFORMATION SHOWN HAS BEEN OBTAINED THROUGH PRELIMINARY PLAT, FIELD MEASUREMENTS AND CONSTRUCTION PLANS AS SUBMITTED BY THE VARIOUS UTILITY COMPANIES (UTILITY LOCATIONS ARE SUBJECT TO CHANGE).
THE VILLAGES OF LAKE-SUMTER, INC., ORANGE BLOSSOM GARDENS, ARNETT ENVIRONMENTAL AND/OR ANY AFFILIATES THEREOF ARE NOT RESPONSIBLE OR LIABLE FOR ACCURACY OR CORRECTNESS OF THE INFORMATION AS SHOWN ON THIS SKETCH.

CUSTOMER SIGNATURE: _____ DATE: _____

CUSTOMER SIGNATURE: _____ DATE: _____

The Villages

Arnett Environmental, LLC
1034 Lake Sumter Landing The Villages, FL 32162
Tel No. (352)753-4747 Fax No. (352)753-1280
Certificate of Authorization Number: 27495

List No.	UNIT	LOT	HOUSE NO.	ADDRESS	ALT KEY NO.	PLAT BOOK/PAGE
1	OBG1	74		1026 Aloha Way	1482461	18/9
2	OBG3-1B	194		803 Aloha Way	2717963	25/33
3	OBG3	110		815 Royal Palm Avenue	2717831	23/27-29
4	OBG3	111		817 Royal Palm Avenue	2665947	23/27-29
5	OBG3	131		811 Truman Avenue	1483921	23/27-29

PLANNING & ZONING BOARD AGENDA ITEM

REQUESTED BOARD MEETING DATE: April 11, 2016

SUBJECT: **Ordinance 2016-13 - Rezoning from Lake County Residential Medium (RM) to Lady Lake Mixed Residential Medium Density (MX-8) for 5 lots consisting of approximately 0.64 +/- acres of land which are located within Orange Blossom Gardens Units 1, 3, and 3.1B, Referenced by Alternate Keys 1482461, 2717963, 2717831, 2665947, 1483921.**

DEPARTMENT: **GROWTH MANAGEMENT**

STAFF RECOMMENDED MOTIONS:

1. **Motion to forward Ordinance No. 2016-13, rezoning 0.64 ± Acres of Property consisting of 5 lots – Located within Orange Blossom Gardens Units 1, 3, and 3.1B within Lake County, Florida – Requesting to Change from Lake County Residential Medium (RM) to Lady Lake Mixed Residential Medium Density (MX-8) to the Town Commission with the recommendation of approval.**

2. **Motion to forward Ordinance No. 2016-13, rezoning 0.64 ± Acres of Property consisting of 5 lots – Located within Orange Blossom Gardens Units 1, 3, and 3.1B within Lake County, Florida – Requesting to Change from Lake County Residential Medium (RM) to Lady Lake Mixed Residential Medium Density (MX-8) to the Town Commission with the recommendation of denial.**

Staff is in support of Motion Number 1

Applicant, Martin L. Dzuro, on behalf of the Villages of Lake-Sumter, Inc., John and Patricia Porto, and Pamela A. Barsness, has filed an application to rezone properties consisting of 5 Lots located north of Griffin Avenue and northeast of North Highway 27/441 within the Orange Blossom Garden Subdivisions Units 1, 3, and 3.1B. The application involves rezoning 0.64 +/- acres of property from Lake County Residential Medium (RM) to Lady Lake Mixed Residential Medium Density (MX-8). The MX-8 designation is consistent with the other lots in the Villages which are presently in the Town of Lady Lake's jurisdiction. The proposed properties are as follows:

- 1026 Aloha Way
- 803 Aloha Way

Public Hearings

The **Town Commission** is scheduled to consider Ordinance 2016-13 for first reading on Monday, May 2, 2016 at 6:00 p.m. The second and final reading will be held on Monday, May 16, 2016 at 6:00 p.m.

FISCAL IMPACT: $ _____

[ ] Capital Budget **[ ] Operating** **[ ] Other**

ATTACHMENTS: **[X] Ordinance(s)** **[ ] Resolution** **[ ] Budget Resolution**

[ ] Other

[ ] Support Documents/Contracts Available for Review in Manager's Office

---

DEPARTMENT HEAD	**Submitted**	**Date**
FINANCE DEPARTMENT	**Approved as to Budget Requirements**	**Date**
TOWN ATTORNEY	**Approved as to Form and Legality**	**Date**
TOWN MANAGER	**Approved Agenda Item for:** 4/11/16	**Date** 4/5/16

(12)
4-5-2016

BOARD ACTION: **[✓] Approved as Recommended** (THASSEN/MCKENZIE 3-0) **[ ] Disapproved**

[ ] Tabled Indefinitely **[ ] Continued to Date Certain**

[ ] Approved with Modification

cc: THAD-G.M.

been included as part of the Small Scale Comprehensive Plan Amendment Application, which the applicant submitted to explain expected impacts on Town Services.

The subject properties involve approximately 0.64 ± acres lie in Section 06, Township 18 South, Range 24 East in Lake County, Florida. The Future Land Use of the adjacent properties is as follows:

Future Land Use

Subject Properties	Lake County Medium Urban Density
	Future Land Use of Adjacent Properties
West	Lake County Medium Urban Density
East	Lake County – Medium Urban Density
North	Lake County Medium Urban Density
South	Lake County Medium Urban Density

Comments:

1) Annexation and Rezoning Applications have been submitted concurrently with this Small Scale Future Land Use Amendment Application.

2) In accordance to the Interlocal Agreement for Building Permits & Inspections Section 2). A., executed on June 23, 2015, if the Villages has applied for annexation, then the Town can issue building permits located within the unincorporated area.

3) Project will be required to adhere to St. John's River Water Management District guidelines and the Town of Lady Lake Floodplain Management Ordinance for parcels within Special Flood Hazard Areas.

The Technical Review Committee (TRC) members individually reviewed application for Ordinance No. 2016-12, and determined the application to be complete and ready for transmittal to the Planning and Zoning Board. The Local Planning Agency is scheduled to consider Ordinance No. 2016-12 on Monday, May 2, 2016, at 5:30 p.m. The Town Commission is scheduled to consider Ordinance 2016-12 for first reading on Monday, May 2, 2016 at 6:00 p.m. The second/final reading will be held on Monday, May 16, 2016 at 6:00 p.m.

Chairperson Gauder asked if there were any comments or questions from the Board or the audience, and hearing none, asked for a motion.

Upon a motion by Member Chiasson and a second by Member McKenzie, the Planning and Zoning Board recommended transmittal and approval of Ordinance No. 2016-12 to the Town Commission for consideration by the following roll call vote:

MCKENZIE	*YES*
CHIASSON	*YES*
GAUDER	*YES*

4. Ordinance No. 2016-13 – Rezoning – The Villages of Lake-Sumter, Inc., John and Patricia Porto, and Pamela A. Barsness – Rezoning from Lake County Residential Medium

(RM) to Lady Lake Mixed Residential Medium Density (MX-8) – Property Being 0.64 +/- Acres of Land (Alternate Keys 1482461, 2717963, 2717831, 2665947, 1483921); Five Lots, which are Located within Orange Blossom Gardens Units 1, 3, And 3.1b (Wendy Then)

Town Planner Wendy Then, presented the background summary for this agenda item (on file in the Clerk's Office). She stated that the applicant, Martin L. Dzuro, on behalf of the Villages of Lake-Sumter, Inc., John and Patricia Porto, and Pamela A. Barsness, has filed an application to rezone properties consisting of five lots located north of Griffin Avenue and northeast of North Highway 27/441 within the Orange Blossom Garden Subdivisions Units 1, 3, and 3.1B. The application involves rezoning 0.64 +/- acres of property from Lake County Residential Medium (RM) to Lady Lake Mixed Residential Medium Density (MX-8). The MX-8 designation is consistent with the other lots in the Villages which are presently in the Town of Lady Lake's jurisdiction. The proposed properties are as follows:

- 1026 Aloha Way
- 803 Aloha Way
- 811 Truman Avenue
- 815 Royal Palm Avenue
- 817 Royal Palm Avenue

The Rezoning application was received on Monday, February 29, 2016, and has been reviewed and determined to be complete satisfying the necessary criteria as required to meet the requirements of the Land Development Regulations (LDRs) as well as the adopted Comprehensive Plan, and is ready for transmittal to the Town Commission.

Notices to inform the surrounding property owners (70) within 150' of the property of the proposed annexation were mailed on Thursday, March 24, 2016, and the properties were posted this same date. Ms. Then stated there have been no objections. There were two inquiries regarding annexation.

The subject properties lie in Section 06, Township 18 South, Range 24 East, in Lake County, Florida. Appropriate legal descriptions and survey information have been included with the submitted application. The zoning designation of the subject properties and adjacent properties are as follows:

Zoning

Subject Property	Lake County Residential Medium (RM)
	Zoning of Adjacent Properties
West	Lake County Residential Medium (RM)
East	Lake County Residential Medium (RM)
North	Lake County Residential Medium (RM)
South	Lake County Residential Medium (RM)

The Technical Review Committee (TRC) members individually reviewed application for Ordinance No. 2016-13, and determined the application to be complete and ready for transmittal to the Planning and Zoning Board. The Town Commission is scheduled to consider Ordinance No. 2016-

DRAFT

13 for first reading on Monday, May 2, 2016 at 6:00 p.m. The second/final reading will be held on Monday, May 16, 2016 at 6:00 p.m.

Chairperson Gauder asked if there were any comments or questions from the audience. Hearing none, he asked for a motion.

Upon a motion by Member McKenzie and a second by Member Chiasson, the Planning and Zoning Board recommended transmittal and approval of Ordinance No. 2016-13 to the Town Commission for consideration by the following roll call vote:

MCKENZIE	*YES*
CHIASSON	*YES*
GAUDER	*YES*

5. <u>Ordinance No. 2016-14 – Large Scale Future Land Use Comprehensive Plan Amendment – Lady Lake Inc. – Changing from Lady Lake Mixed Residential Medium Density (MR-MD) to Lady Lake Commercial Tourist (CT) – Property Located at 609 Highway 466 being 27.13 ± Acres of Land (Alternate Key #1120829) (Wendy Then)</u>

Growth Management Director, Thad Carroll, presented the background summary for this agenda item (on file in the Clerk's Office). He stated that the applicant, Bret Jones, P.A., has filed an application on behalf of Lady Lake, Inc., to amend the Future Land Use designation of property (AK# 1120829) Located at 609 Highway 466, Being North of Highway 466, West of North Clay Avenue, and East of Rolling Acres Road, which includes 27.13± acres within Town of Lady Lake limits, from Mixed Residential Medium Density (MR-MD) to Commercial Tourist (CT).

The Large Scale Future Land Use Map Amendment application was received on February 22, 2016, and has been reviewed and determined to be complete satisfying the necessary criteria as required to meet the requirements of the Land Development Regulations (LDRs) as well as the adopted Comprehensive Plan, and is ready for transmittal to the Town Commission, pending a recommendation from the Planning and Zoning Board.

Notices to inform the surrounding property owners (17) within 150' of the property of the proposed amendment were mailed on Monday, March 28, 2016 and the property was posted this same date.

The conceptual bubble plan submitted by Riddle Newman Engineering, Inc., highlights the proposed park facility and included the general area of where the amenities will be placed in the park, as well as the street network and water retention area.

Impact on Town Services

Potable Water-

- Potable Water Systems – CUP allocation of 1.18 million gpd (2016)
- Current water systems usage – 697,461 gpd
- Demand Contingent on Occupants of Development (482,539 gdp available)
- Estimated consumption 28,000 gpd

Sewer -The applicant has proposed to utilize the existing onsite sewer plant; no additional impact to the Town of Lady Lake.

TOWN COMMISSION AGENDA ITEM

REQUESTED COMMISSION MEETING DATE: May 2, 2016 – First Reading

---

SUBJECT: **Ordinance 2016-13 - Rezoning from Lake County Residential Medium (RM) to Lady Lake Mixed Residential Medium Density (MX-8) for 5 lots consisting of approximately 0.64 +/- acres of land which are located within Orange Blossom Gardens Units 1, 3, and 3.1B, Referenced by Alternate Keys 1482461, 2717963, 2717831, 2665947, 1483921.**

DEPARTMENT: **GROWTH MANAGEMENT**

STAFF RECOMMENDED MOTION:

Staff Recommends approval of Ordinance No. 2016-13, rezoning 0.64 ± Acres of Property consisting of 5 lots – Located within Orange Blossom Gardens Units 1, 3, and 3.1B within Lake County, Florida – Requesting to Change from Lake County Residential Medium (RM) to Lady Lake Mixed Residential Medium Density (MX-8.

Applicant, Martin L. Dzuro, on behalf of the Villages of Lake-Sumter, Inc., John and Patricia Porto, and Pamela A. Barsness, has filed an application to rezone properties consisting of 5 Lots located north of Griffin Avenue and northeast of North Highway 27/441 within the Orange Blossom Garden Subdivisions Units 1, 3, and 3.1B. The application involves rezoning 0.64 +/- acres of property from Lake County Residential Medium (RM) to Lady Lake Mixed Residential Medium Density (MX-8). The MX-8 designation is consistent with the other lots in the Villages which are presently in the Town of Lady Lake's jurisdiction. The proposed properties are as follows:

- 1026 Aloha Way
- 803 Aloha Way
- 811 Truman Avenue
- 815 Royal Palm Avenue
- 817 Royal Palm Avenue

The Rezoning application was received on Monday, February 29, 2016, and has been reviewed and determined to be complete satisfying the necessary criteria as required to meet the requirements of the Land Development Regulations (LDRs) as well as the adopted Comprehensive Plan, and is ready for transmittal to the Town Commission.

Notices to inform the surrounding property owners (70) within 150' of the property of the proposed annexation were mailed on Thursday, March 24, 2016. The properties were also posted Thursday, March 24, 2016.

The subject properties lie in Section 06, Township 18 South, Range 24 East, in Lake County, Florida. Appropriate legal descriptions and survey information have been included with the submitted application. The zoning designation of the subject properties and adjacent properties are as follows:

Zoning

Subject Property	Lake County Residential Medium (RM)
Zoning of Adjacent Properties	
West	Lake County Residential Medium (RM)
East	Lake County Residential Medium (RM)
North	Lake County Residential Medium (RM)
South	Lake County Residential Medium (RM)

Past Actions:

The **Technical Review Committee (TRC)** members individually reviewed application for Ordinance 2016-13, and determined the application to be complete and ready for transmittal to the P&Z Board.

At the April 11, 2016 meeting, the **Planning and Zoning Board** recommended approval of Ordinance 2016-13 by a vote of 3-0.

Public Hearings

The **Town Commission** is scheduled to consider Ordinance 2016-13 for second and final reading on Monday, May 16, 2016 at 6:00 p.m.

FISCAL IMPACT: $ _____

[ ] Capital Budget [ ] Operating [ ] Other

ATTACHMENTS: [X] Ordinance(s) [ ] Resolution [ ] Budget Resolution

[ ] Other

[ ] Support Documents/Contracts Available for Review in Manager's Office

DEPARTMENT HEAD Submitted 4/25/16 Date

FINANCE DEPARTMENT Approved as to Budget Requirements Date

TOWN ATTORNEY Approved as to Form and Legality Date

TOWN MANAGER Approved Agenda Item for: 5-2-16 Date

4/25/16 4/26/16

BOARD ACTION: [✓] Approved as Recommended [ ] Disapproved

VINRIC 5-0

[ ] Tabled Indefinitely [ ] Continued to Date Certain

[ ] Approved with Modification

CC: THAD - G.M.

~~The subject properties involve approximately 0.64 ± acres lie in Section 06, Township 18 South, Range 24 East in Lake County, Florida. The Future Land Use of the adjacent properties is as follows:~~

~~Future Land Use~~

~~Subject Properties~~	~~Lake County Medium Urban Density~~
~~Future Land Use of Adjacent Properties~~	
~~West~~	~~Lake County Medium Urban Density~~
~~East~~	~~Lake County – Medium Urban Density~~
~~North~~	~~Lake County Medium Urban Density~~
~~South~~	~~Lake County Medium Urban Density~~

~~Comments:~~

~~1) Annexation and Rezoning Applications have been submitted concurrently with this Small Scale Future Land Use Amendment Application.~~
~~2) In accordance with the Interlocal Agreement for Building Permits & Inspections Section 2).A)., executed on June 23, 2015, if The Villages has applied for annexation, then the Town can issue building permits located within the unincorporated area.~~
~~3) Project will be required to adhere to St. John's River Water Management District guidelines and the Town of Lady Lake Floodplain Management Ordinance for parcels within Special Flood Hazard Areas.~~

~~Mr. Carroll reported that the Technical Review Committee (TRC) members individually reviewed application for Ordinance No. 2016-12, and determined the application to be complete and ready for transmittal to the Planning and Zoning Board. At the April 11, 2016 meeting, the Planning and Zoning Board recommended approval of Ordinance No. 2016-12 by a vote of 3-0. The Local Planning Agency considered this ordinance at an earlier meeting today and voted 5-0 for approval. The Town Commission is scheduled to consider Ordinance No. 2016-12 for second/final reading on Monday, May 16, 2016 at 6:00 p.m. He stated Martin Dzuro is present to answer any questions.~~

~~Mayor Kussard asked if anyone had any questions or comments, and hearing none, asked for a motion.~~

~~***Upon a motion by Commissioner Holden and seconded by Commissioner Richards, the Commission approved the first reading of Ordinance No. 2016-12 by the following roll call vote:***~~

~~***HOLDEN***~~	~~***YES***~~
~~***VINCENT***~~	~~***YES***~~
~~***HANNAN***~~	~~***YES***~~
~~***RICHARDS***~~	~~***YES***~~
~~***KUSSARD***~~	~~***YES***~~

9. Ordinance No. 2016-13 – First Reading – Rezoning – The Villages of Lake-Sumter, Inc., John and Patricia Porto, and Pamela A. Barsness – Rezoning from Lake County Residential Medium (RM) to Lady Lake Mixed Residential Medium Density (MX-8) for Five (5) Lots of Approximately 0.64 +/- Acres – Located within Located Within Orange Blossom Gardens Units 1, 3, And 3.1b. (Thad Carroll)

Town Attorney Derek Schroth read the ordinance by title only.

Growth Management Director Thad Carroll gave the background summary for this agenda item (on file in the Clerk's office). He stated that the applicant, Martin L. Dzuro, on behalf of The Villages of Lake-Sumter, Inc., John and Patricia Porto, and Pamela A. Barsness, has filed an application to rezone properties consisting of five lots located north of Griffin Avenue and northeast of North Highway 27/441 within the Orange Blossom Garden Subdivisions Units 1, 3, and 3.1B. The application involves rezoning 0.64 +/- acres of property from Lake County Residential Medium (RM) to Lady Lake Mixed Residential Medium Density (MX-8). The MX-8 designation is consistent with the other lots in the Villages which are presently in the Town of Lady Lake's jurisdiction. Staff recommends approval of this ordinance. The proposed properties are as follows:

- 1026 Aloha Way
- 803 Aloha Way
- 811 Truman Avenue
- 815 Royal Palm Avenue
- 817 Royal Palm Avenue

The Rezoning application was received on Monday, February 29, 2016, and has been reviewed and determined to be complete, satisfying the necessary criteria as required to meet the requirements of the Land Development Regulations (LDRs) as well as the adopted Comprehensive Plan, and is ready for transmittal to the Town Commission.

Mr. Carroll reported that notices to inform the surrounding property owners (70) within 150' of the property of the proposed annexation were mailed on Thursday, March 24, 2016, and the properties were posted this same date.

The current zoning map was shown. The subject properties lie in Section 06, Township 18 South, Range 24 East, in Lake County, Florida. Appropriate legal descriptions and survey information have been included with the submitted application. The zoning designation of the subject properties and adjacent properties are as follows:

Zoning

Subject Property	Lake County Residential Medium (RM)
Zoning of Adjacent Properties	
West	Lake County Residential Medium (RM)
East	Lake County Residential Medium (RM)
North	Lake County Residential Medium (RM)
South	Lake County Residential Medium (RM)

Mr. Carroll reported that the Technical Review Committee (TRC) members individually reviewed application for Ordinance No. 2016-13, and determined the application to be complete and ready for transmittal to the Planning and Zoning Board. At the April 11, 2016 meeting, the Planning and Zoning Board recommended approval of Ordinance No. 2016-13 by a vote of 3-0. The Town Commission is scheduled to consider Ordinance No. 2016-13 for second/final reading on Monday, May 16, 2016 at 6:00 p.m. He stated Martin Dzuro is present to answer any questions.

Mayor Kussard asked if anyone had any questions or comments, and hearing none, asked for a motion.

Upon a motion by Commissioner Vincent and seconded by Commissioner Richards, the Commission approved the first reading of Ordinance No. 2016-13 by the following roll call vote:

HOLDEN	***YES***
VINCENT	***YES***
HANNAN	***YES***
RICHARDS	***YES***
KUSSARD	***YES***

~~10. Ordinance No. 2016-14 – First Reading – Large Scale Future Land Use Comprehensive Plan Amendment – Lady Lake Inc. – from Lady Lake Mixed Residential Medium Density (MR-MD) to Lady Lake Commercial Tourist (CT) for Property Being 29.43 ± Acres of Land – Located At 609 Highway 466, Being North of Highway 466, West of North Clay Avenue, and East of Rolling Acres Road (Thad Carroll)~~

~~Town Attorney Derek Schroth read the ordinance by title only.~~

~~Growth Management Director Thad Carroll gave the background summary for this agenda item (on file in the Clerk's office). He stated that the applicant, Bret Jones, P.A., has filed an application on behalf of Lady Lake, Inc., to amend the Future Land Use designation of property (AK# 1120829) located at 609 Highway 466, being north of Highway 466, west of North Clay Avenue, and east of Rolling Acres Road, which includes 29.43± acres within Town of Lady Lake limits, from Mixed Residential Medium Density (MR-MD) to Commercial Tourist (CT). He stated this property is also referenced as Recreation Plantation. The present use of the property is as a storage area and the proposed use is for a 232-unit RV park site with amenities. Staff's recommendation is for approval.~~

~~A map and an aerial view of the property was shown, as were photos of the postings.~~

~~The Large Scale Future Land Use Map Amendment application was received on February 22, 2016, and has been reviewed and determined to be complete satisfying the necessary criteria as required to meet the requirements of the Land Development Regulations (LDRs) as well as the adopted Comprehensive Plan, and is ready for transmittal to the Town Commission.~~

~~The conceptual bubble plan submitted by Riddle Newman Engineering, Inc., highlights the proposed park facility and included the general area of where the amenities will be placed in the park, as well as the street network and water retention area.~~

~~Mr. Carroll reviewed the impact on Town services as follows:~~

~~Potable Water –~~

- ~~Potable Water Systems – CUP allocation of 1.18 million gpd (2016)~~
- ~~Current water systems usage – 697,461 gpd~~
- ~~Demand Contingent on Occupants of Development (482,539 gpd available)~~
- ~~Estimated consumption 28,000 gpd~~

~~Sewer – The applicant has proposed to utilize the existing onsite sewer plant; no additional impact to the Town of Lady Lake (pending waiver to not connect).~~

~~Schools – Not factored for project – no foreseen impact of students.~~

~~Transportation – Traffic Analysis indicates a that the proposed Future Land Use designation of CT – RV Park, will generate 125 fewer a.m. peak hour trips and 164 fewer p.m. peak hour trips than the current MR-MD Designation assuming maximum potential under the Future Land Use Classification.~~

K-10

TOWN COMMISSION AGENDA ITEM

REQUESTED COMMISSION MEETING DATE: May 16, 2016

SUBJECT: Ordinance No. 2016-17 – Amendments to the Land Development Regulations (Ordinance No. 2009-15) Chapter 17, Sign Regulations to:
Section 17-2, Permitting Requirements,
Section 17-3, General Requirements,
Section17- 4, Permanent Signs, and
Section 17-5, Temporary Signs

DEPARTMENT: Growth Management

STAFF RECOMMENDED MOTION:

Staff recommends approval of Ordinance #2016-17–amending the Town of Lady Lake Land Development Regulations (Ordinance No. 2009-15), Chapter 17 "Sign Regulations".

SUMMARY:

On October 5, 2009, Town Commission approved Ordinance 2009-15 in an effort to update Chapter 17, Sign Regulations, which were originally adopted in 1994. The changes that were incorporated sought to put more detailed sign restrictions both for safety and aesthetic purposes as well as signage provisions for temporary and promotional events.

It has been almost seven years since the sign Code have been amended, and as staff has been progressively working with the sign Code provisions, particularly our Code Enforcement, Growth Management Dept., and even Public Works, Town Staff has been directed to revise certain sections of Chapter 17 that continuously result variance applications; issues which appear to be more the norm rather than the exception. In addition, the changes made under section 17-2) will help clarify permitting requirements and diminish conflicts in the interpretations to the Sign Code, thus communicating a better understanding to our citizens and the general public of our regulations.

The proposed revisions on 17-4) aim to allow flexibility for businesses to select which façade to place wall signage as long as the sign proposal adheres to maximum square footage allowed and is placed on exterior elevations facing the public street or the patron's parking areas. Amendments to section 17-5) will extend the display of promotional banners and/or feather flags an additional time a year for a maximum of four (4) times a year per each business. Overall, the proposed amendments to

Chapter 17- Sign Regulations seek to align and reconcile existing practices with the written provisions of the Code.

Public Hearing Dates:

At the **Planning and Zoning Board** Meeting held on Monday, May 9, 2016, the board recommended approval with a 3-0 vote.

The Town Commission is scheduled to hear Ordinance 2016-17 second and final reading on Monday, June 6, 2016.

FISCAL IMPACT: $ -0- **[ ] Capital Budget**
[ ] Operating
[ ] Other

ATTACHMENTS: [x] Ordinance(s) [ ] Resolution [ ] Budget Resolution

[ ] Other

[ ] Support Documents/Contracts Available for Review in Manager's Office

---

DEPARTMENT HEAD **Submitted** 5/10/16 **Date**

5-10-16 **FINANCE DEPARTMENT** **Approved as to Budget Requirements Date**

TOWN ATTORNEY **Approved as to Form and Legality**
Date

TOWN MANAGER Fanick **Approved Agenda Item for:** 5-16-16
Date 5-10-16

COMMISSION ACTION: [ ] Approved as Recommended **[ ] Disapproved**

[ ] Tabled Indefinitely [ ] Continued to Date Certain

[ ] Approved with Modification

ORDINANCE NO. 2016-17

AN ORDINANCE OF THE TOWN OF LADY LAKE, LAKE COUNTY, FLORIDA; AMENDING ORDINANCE NO. 2009-15 PERTAINING TO THE TOWN OF LADY LAKE LAND DEVELOPMENT REGULATIONS, CHAPTER 17, SIGN REGULATIONS; AMENDING SECTIONS 17-2. - PERMITTING REQUIREMENTS, 17-3. - GENERAL REQUIREMENTS, 17-4. - PERMANENT SIGNS, AND 17-5. - TEMPORARY SIGNS; PROVIDING PROVISIONS FOR SIGN REMOVAL ACTION; PROVIDING FOR SEVERABILITY; PROVIDING FOR CODIFICATION; PROVIDING FOR AN EFFECTIVE DATE.

WHEREAS, on December 2, 1991, the Town of Lady Lake adopted a Comprehensive Plan (Ordinance No. 91-21) pursuant to the requirements of Chapter 163, Part II, Florida Statutes and Chapter 9J-5, Florida Administrative Code; and

WHEREAS, on January 23, 1992, the Florida Department of Community Affairs determined that the Town of Lady Lake Comprehensive Plan was in compliance with the requirements of Chapter 163, Part II, Florida Statutes and Chapter 9J-5, Florida Administrative Code; and

WHEREAS, on August 15, 1994, the Town of Lady Lake adopted the Land Development Regulations of the Town of Lady Lake, Florida, in accordance with the Town of Lady Lake Comprehensive Plan and the requirements of Chapter 163, Part II, Florida Statutes; and

WHEREAS, on October 5, 2009, pursuant to the provisions of the Town of Lady Lake Land Development Regulations, the Town Commission of the Town of Lady Lake amended Chapter 17 "Sign Regulations" of the Land Development Regulations: and

WHEREAS, on May 9, 2016, pursuant to the provisions of the Town of Lady Lake Land Development Regulations, the Planning and Zoning Commission of the Town of Lady Lake reviewed the proposed amendment to the Land Development Regulations, which are attached hereto as Exhibit "A", and recommended to the Town Commission of the Town of Lady Lake that said amendment be adopted.

WHEREAS, the Town of Lady Lake has elected to amend Chapter 17 "Sign Regulations" of the Land Development Regulations, finding it is in the best interest of the Town of Lady Lake and promotes the general welfare of its citizens.

NOW, THEREFORE, BE IT ORDAINED BY THE TOWN COMMISSION OF THE TOWN OF LADY LAKE, FLORIDA:

Section 1. Amendment. "The Land Development Regulations of the Town of Lady Lake, Florida," dated August 15, 1994 (the "Land Development Regulations") is hereby amended as provided below:

Chapter 17 - Sign Regulations, Sections 17-2), 17-3), 17-4) and 17-5) of the Land Development Regulations amended as set forth in Exhibit "A",

Section 2. Severability. If any section, sentence, clause or phrase of this Ordinance is held to be invalid or unconstitutional by any court of competent jurisdiction, then said holding shall in no way affect the validity of the remaining portion of this Ordinance.

Section 3. Conflicts. All ordinances or part of the ordinances in conflict with any provisions of this Ordinance are hereby repealed.

Section 4. Codification. The provisions of this Ordinance shall be codified as and become part of the Town's Land Development Regulations. The sections of this Ordinance may be re-numbered or re-lettered to accomplish such intention and the word "Ordinance," or similar words, may be changed to "Section," "Article," or other appropriate word.

Section 5. Applicability. This Ordinance does not have retroactive applicability and does not apply to applications filed prior to the effective date of this Ordinance.

Section 6. Effective Date. This ordinance shall become effective upon adoption.

PASSED AND ORDAINED this ____day of _____, 2016, in the regular session of the Town Commission of the Town of Lady Lake, Lake County, Florida, upon the Second/Final Reading.

TOWN OF LADY LAKE, FLORIDA

_____

Ruth Kussard, Mayor

ATTEST:

_____

Kristen Kollgaard, Town Clerk

APPROVED AS TO FORM:

_____

Derek Schroth, Town Attorney

EXHIBIT "A"

CHAPTER 17-SIGN REGULATIONS

Sec 17-2. - Permitting Requirements.

4) **Signs Exempt from Permitting Requirements**

The following types of signs may be erected without a sign permit, provided such signs and operations conform to the provisions contained in this Chapter and with all other building, structural and electrical standards of the Town:

A) Public Information Signs: Public signs located wholly on public property. Signs used for public safety requiring a location within a public or private right-of-way are exempt from setback requirements.

B) Agricultural Signs: Signs related to bona fide agricultural activities being performed on the property are permitted, provided they do not exceed fifteen (15) square feet. One sign per street frontage is allowed.

C) Governmental Signs: Signs required by federal, state or local law or regulations.

D) Real Estate Signs: Real estate signs, as provided in **Section 5** of this Chapter.

E) Membership Signs: Membership signs of two (2) square feet or less per street frontage.

F) Political Campaign Signs: Political Campaign Signs, as provided in Section 5 of this Chapter.

G) Construction Signs: Construction Signs, as provided in Section 5 of this Chapter.

~~F)~~H) Governmental Flags: The flying of ground-mounted freestanding national, state or city flags; provided that such flags shall not be used in such a manner as to attract attention for commercial purposes.

~~G)~~I) Non-political Flags: A company, organization, or non-political entity may display one (1) non-political flag in affiliation with the operations. However, the installation of a flag pole structure must adhere to the requirements of the adopted Florida Building Code, as amended.

Sec 17-3. – General requirements.

e) Sign Placement Standards

2) Wall Signs

E). Wall Sign size shall not exceed ~~ten~~ twenty(~~10~~20) percent of the square footage of the façade.

Sec 17-4. - Permanent Signs.

b) Non-residential zoning districts

1. **Single Use Developments**

Type of Signs	Number of Signs	Maximum Sign Area	Sign Height
Monument	1 per site frontage on a public street	80 sq. ft. per sign	8 ft.
Wall, awning, marquee or projecting	1 per building frontage on a public street	2 sq. ft. per lineal foot of building frontage on a public street, with up to 200 sq. ft. maximum, or 20 percent of square footage of the façade; whichever is greater.	NA
Window	1 per facade	50% of the glass area where the sign is placed. ~~The window sign area shall be subtracted from the allowable wall sign area.~~	NA
Directional	Determined on a case-by-case basis	4 sq. ft. each	3 ft.
Drive-Through Menu	2 per site	24 sq. ft.	6 ft.
Menu Board	1 per site	6 sq. ft.	NA

B) ~~The Town Manager~~ Applicants may be allowed an additional wall, awning, marquee, or projecting sign on ~~a~~ secondary façades ~~(not~~ facing the public street and/or along facades which face the tenant's parking area~~) only if a public entrance to the business on that secondary façade needs to be identified~~. The size of such signage on secondary facades shall be discounted from the maximum wall sign area allowed.

2. **Multi-Tenant Developments**

Type of Sign	Number of Signs	Maximum Sign Area	Sign Height
Monument	1 per site frontage for the main site plus 1 per frontage for each outparcel, subject to meeting sign separation requirements.	Local - 80 sq. ft. Neighborhood - 120 sq. ft. Community - 150 sq. ft. Regional - 198 sq. ft.	8 ft.
Wall, awning, marquee or projecting	1 per tenant, except as noted below	2 sq. ft. per lineal foot of facade width, with up to 200 sq. ft. maximum, or 20 percent of square footage of the façade; whichever is greater.	NA
Window	1 per facade for each tenant.	50% of the glass area where the sign is placed. ~~The window sign area shall be subtracted from the allowable wall sign area~~.	NA
Directory	1 per site	2 sq. ft. per tenant, up to a maximum	6 ft.

		of 24 sq. ft. total per sign	
Directional	Determined on a site-by-site basis	4 sq. ft. each	3 ft.
Drive-Through Menu	2 per tenant	24 sq. ft.	6 ft.
Menu Board	1 per tenant	6 sq. ft.	NA

G) ~~The Town Manager may allow i~~Individual tenants may be allowed to display an additional wall, awning, marquee, or projecting sign on a secondary façade~~, only if a public entrance on that secondary façade needs to be identified~~ facing the public street and/or along facades which face the tenants' parking area.~~-~~ The size of signs displayed on secondary facades shall be discounted from the total maximum wall sign area allowed.

Sec 17-5. – Temporary Signs.

d) Banners, Feather Flags, and other promotional signs.

1) Banners and Feather Flags. Promotional banners and feather flags may be allowed to the general requirement for all signs set forth in section 17-3 and the following conditions:

A) *Number*. No more than ~~one (1)~~ two (2) signs per business and no more than three ~~(3) signs per~~ multi-tenant businesses can ~~be~~ display~~ed~~ banners or feather flags at a one (1) time. However, if a single use development has two (2) frontages, then the business would be allowed to place a maximum of ~~two (2)~~one (1) banner~~s~~ and one feather flag per frontage or two (2) feather flags per frontage as long as the total ~~banner~~ size does not exceed the maximum size allowed. No more than ~~three (3)~~ four (4) permits may be issued for each tenant per calendar year.

B) *Size*. The sign(s) shall not exceed thirty-two (32) square feet in size and shall be exempt from the maximum allowable square footage for on-premises signs.

C) *Permit required*. No promotional signs may be displayed for a maximum of fifteen (15) consecutive days and for a total of ~~forty-five~~sixty (~~45~~60) per calendar year. Failure to remove a banner and/or feather flag within the prescribed time frame shall result in a violation of this provision. No permits shall be issued during the calendar year in which such a violation occurs.

g) Construction Signs

Non-illuminated construction signs of thirty-two (32) square feet or less are allowed at active construction sites. A maximum of two (2) construction signs will be allowed per parcel. The minimum setback is 5 feet from the property line. Any such sign shall be removed within fifteen (15) days after the certificate of occupancy for the structure is issued.

PLANNING AND ZONING BOARD AGENDA ITEM

REQUESTED BOARD MEETING DATE: May 9, 2016

SUBJECT: **Ordinance No. 2016-17 – Amendments to the following sections of the Land Development Regulations (Ordinance No. 2009-15) Chapter 17, Sign Regulations:**
Section 17-2, Permitting Requirements,
Section 17-3, General Requirements,
Section17- 4, Permanent Signs, and
Section 17-5, Temporary Signs

DEPARTMENT: **Growth Management**

RECOMMENDED MOTIONS:

(1) **Motion to forward Ordinance #2016-17, an amendment to the Town of Lady Lake Land Development Regulations (Ordinance No. 2009-15), Chapter 17 "Sign Regulations", with the recommendation of approval.**

(2) **Motion to forward Ordinance #2016-17, an amendment to the Town of Lady Lake Land Development Regulations (Ordinance No. 2009-15), Chapter 17 "Sign Regulations", with the recommendation of denial.**

Staff supports Motion #1

SUMMARY:

On October 5, 2009, Town Commission approved Ordinance 2009-15 in an effort to update Chapter 17, "Sign Regulations", which were originally adopted in 1994. The changes that were incorporated sought to put more detailed sign restrictions, both for safety, and aesthetic purposes as well as signage provisions for temporary and promotional events.

It has been almost seven years since the sign code has been amended, and as staff has been progressively working with the sign Code provisions, particularly our Code Enforcement, Growth Management Department, and even Public Works, Town Staff has been directed to revise certain sections of Chapter 17 that continuously result variance applications. These issues now appear to be more the norm rather than the exception. In addition, the changes made under Section 17-2) will help clarify permitting requirements and diminish conflicts in the interpretation of the Sign Code, thus communicating a better understanding to our citizens and the general public of our regulations.

The proposed change to Section 17-3) will allow the size of a wall sign to comprise a maximum of 20% of the façade on which it is placed; current regulations limit this coverage to 10% of the square footage of the wall. The proposed revisions to Section 17-4) aim to allow flexibility for businesses to select which façade to place wall signage, as long as the sign proposal adheres to maximum square footage allowed and is

placed on exterior elevations facing the public street or the patron's parking areas. Amendments to section 17-5) will extend the display of promotional banners and/or feather flags an additional time a year for a maximum of four (4) times a year per each business. Overall, the proposed amendments to Chapter 17-Sign Regulations seek to align and reconcile existing practices with the written provisions of the Code.

As the Planning and Zoning Board, Growth Management staff requests your input and direction in these efforts, which ultimately seek to establish regulations that enhance public safety and the general well being of Town of Lady Lake citizens.

Tentative Public Hearing Dates:

The Town Commission is tentatively scheduled to hear Ordinance 2016-17 for first reading on Monday, May 16, 2016 and second reading on Monday, June 6, 2016.

FISCAL IMPACT: $ **-0-** **[ ] Capital Budget**
[ ] Operating
[ ] Other

ATTACHMENTS: **[x] Ordinance(s)** **[ ] Resolution** **[ ] Budget Resolution**

[ ] Other

[ ] Support Documents/Contracts Available for Review in Manager's Office

---

DEPARTMENT HEAD **Submitted** 5/3/16 **Date**

FINANCE DEPARTMENT **Approved as to Budget Requirements** **Date**

TOWN ATTORNEY **Approved as to Form and Legality**
Date
5-3-16

TOWN MANAGER **Approved Agenda Item for:** 5-9-16
Date

COMMISSION ACTION: **[✓] Approved as Recommended** **[ ] Disapproved**
SIGURDSON/ MCKENZIE 3-0

[ ] Tabled Indefinitely **[ ] Continued to Date Certain**

[ ] Approved with Modification

cc: THAD - T.M.