REGULAR MEETING OF THE LADY LAKE TOWN COMMISSION

DATE:	**Monday, April 18, 2016**
TIME:	**6:00 p.m.**
PLACE:	**Town Hall Commission Chambers** **409 Fennell Blvd., Lady Lake, Florida**

ALL INTERESTED PERSONS ARE CORDIALLY INVITED TO ATTEND THIS PUBLIC MEETING

AGENDA*

A. CALL TO ORDER: Mayor Ruth Kussard

B. PROCEDURAL: *Citizens are encouraged to participate in the Town of Lady Lake meetings. Speakers will be limited to three (3) minutes. Additional time may be granted by the Mayor. Citizen groups are asked to name a spokesperson and the Mayor, at his/her discretion, may allow longer than three minutes. Upon being recognized by the Mayor, please approach the dais, state your name and address, and speak into the microphone. The order of agenda items may be changed if deemed appropriate by the Town Commission. Please be respectful of others and put your cell phone on silent mode.*

C. PLEDGE OF ALLEGIANCE: Mayor Ruth Kussard

D. INVOCATION[1]: Reverend Tom Ash, New Song Community Church

E. ROLL CALL

F. PUBLIC COMMENTS[2]

G. ANNOUNCEMENT: Designation of the Town of Lady Lake as a Tree City USA

H. PROCLAMATION:

1. Proclaiming the Month of April 2016 as Children and Youth Month (Mayor Kussard/Donna McGlone, American Legion Auxiliary Unit 347) (Pg. 4)

2. Proclaiming April 28, 2016 as Arbor Day in Lady Lake (Mayor Kussard/Mike Burske) (Pg. 5)

I. PRESENTATION:

3. Presentation of Certificate of Completion to Commissioner Dan Vincent for Completion of the Institute for Elected Municipal Officials III: The Leadership

Challenge Held on March 11-12, 2016 (Kris Kollgaard/Commissioner Dan Vincent) (Pg. 6)

J. CONSENT[3]:

4. Minutes – April 4, 2016 – Regular Commission Meeting (Pg. 8)

5. Consideration of Approval of the Renewal of the MOA with Lake-Sumter Children's Advocacy Center (Chris McKinstry) (Pg. 18)

K. OLD BUSINESS:

L. NEW BUSINESS:

6. Consideration of the Purchase of One Portable Radar Speed Display and Message Sign (Chris McKinstry) (Pg. 35)

7. Discussion of Advertising in the Special Conference Issue of "Quality Cities" for the 2016 Florida League of Cities Conference (Kris Kollgaard) (Pg. 46)

M. TOWN ATTORNEY'S REPORT:

N. TOWN MANAGER'S REPORT:

8. Consideration of Extension of Terms for Two Members of the Police Pension Board (Kris Kollgaard) (Pg. 52)

9. Discussion/Direction Regarding Lumen Park Project's Request for a Resolution (Kris Kollgaard) (Pg. 53)

O. MAYOR/COMMISSIONER'S REPORT:

P. PUBLIC COMMENTS[4]

Q. ADJOURN

***Back up for agenda items is available on the Town's website at www.ladylake.org or contact the Town Clerk at (352) 751-1571.**

This public hearing is being conducted in a handicapped accessible location. Any handicapped person requiring an interpreter for the hearing impaired or the visually impaired should contact the Clerk's Office at least two (2) days prior to the meeting and an interpreter will be provided. To access a Telecommunication Device for Deaf Persons (TDD), please call (352) 751-1565. Any handicapped person requiring special accommodations at this meeting should contact the Clerk's Office at least two (2) days prior to the meeting.

Advice to the Public: If a person decides to appeal a decision made with respect to any matter considered at the above meeting or hearing, he may need a verbatim record of the proceedings including the testimony and evidence, a record of which is not provided by the Town of Lady Lake. (F.S. 286-0105)

Please be advised that one or more members of any other Town Board or Committee may be in attendance of this meeting.

NS/Word/Town Clerk/Agendas - Commission Meeting – 04-18-2016

---

[1] *Any invocation that may be offered before the official start of the Commission meeting shall be the voluntary offering of a private citizen, to and for the benefit of the Commission. The views or beliefs*

expressed by the invocation speaker have not been previously reviewed or approved by the Commission, and the Commission is not allowed by law to endorse the religious beliefs or views of this, or any other speaker.

[2] *This section is reserved for members of the public to bring up matters of concern or comments. It is not limited to items on the agenda and it is open to any concern or comments that the public may have.*

[3] *All items listed under consent are considered routine by the Town Commission and will be enacted by one motion. There will be no separate discussion of these items unless a Town Commissioner so requests, in which event the item will be removed from the consent agenda and considered in its normal sequence.*

[4] *This section is reserved for members of the public to bring up matters of concern or comments. It is not limited to items on the agenda and it is open to any concern or comments that the public may have.*

H-1

Proclamation

Whereas, the American Legion has been actively involved with children's issues since the early 1920s. In many instances, the Legion has been the driving force on behalf of children on the federal, state and local levels; and

Whereas, in 1938, April was formally designated as Child Welfare Month (now called Children & Youth Month) and has continued on an annual basis. During this special time, we urge each of you to show your community that the American Legion family is dedicated to America's youth; and

Whereas, each year at the American Legion's Spring meetings, the Committee on Children & Youth focuses on three primary areas of concern. They may include:

Child health
- Immunization programs
- School nutrition programs
- Teen pregnancy prevention programs

Child safety
- Child pornography
- Drug abuse prevention
- Drug trafficking
- Alcohol abuse prevention
- Child/sexual abuse and neglect
- Teen suicide prevention

Family support
- National Family Week Activities
- Day care safety
- Foster care
- Temporary Financial Assistance
- Missing and exploited children

Now, Therefore, I, Ruth Kussard, Mayor of the Town of Lady Lake, Florida, do hereby proclaim the month of **April, 2016** as

"Children & Youth Month"

In Witness Whereof, I have hereunto set my hand and caused the Official Seal of the Town of Lady Lake to be affixed this **18th** day of **April, 2016**.

Ruth Kussard, Mayor

ATTEST:

Kristen Kollgaard, Town Clerk

H-2

celebrate Arbor Day

PROCLAMATION

Whereas, in 1872, J. Sterling Morton proposed to the Nebraska Board of Agriculture that this special day be set aside for the planting of trees, and

Whereas, this holiday, called Arbor Day, was first observed with the planting of more than a million trees in Nebraska, and

Whereas, Arbor Day is now observed throughout the nation and the world, and

Whereas, trees can reduce the erosion of our precious topsoil by wind and water, cut heating and cooling costs, moderate the temperature, clean the air, produce life-giving oxygen, and provide habitat for wildlife, and

Whereas, trees are a renewable resource giving us paper, wood for our homes, fuel for our fires, and beautify our community, and

Whereas, trees in our Town increase property values, enhance the economic vitality of business areas, and beautify our community, and

Whereas, trees, wherever they are planted, are a source of joy and spiritual renewal.

Now, Therefore, I, Ruth Kussard, Mayor of the Town of Lady Lake, Florida do hereby proclaim **April 28, 2016** as

NATIONAL ARBOR DAY

in the Town of Lady Lake, and I urge all citizens to celebrate National Arbor Day and to support efforts to protect our trees and woodlands; and

Further, I urge all citizens to plant trees to gladden the heart and promote the well-being of this and future generations.

IN WITNESS WHEREOF, I have hereunto set my hand and caused the Seal of the Town of Lady Lake to be affixed this 28th day of April, 2016.

_____
Ruth Kussard, Mayor
Town of Lady Lake

ATTEST:

_____
Kristen Kollgaard, Town Clerk

FLORIDA LEAGUE OF CITIES, INC.

125 East Colonial Drive • P.O. Box 530065 • Orlando, FL 32853-0065 • (407) 425-9142 • Fax (407) 425-9378 • www.floridaleagueofcities.com

APR - 4
Town of Lady Lake
Town Manager's Office

I-3

March 30, 2016

Ms. Kristen Kollgaard
Town Clerk, Town of Lady Lake
409 Fennell Blvd.
Lady Lake, FL 32159

Dear Ms. Kollgaard:

Enclosed is a Certificate or Certificates of Completion to be awarded to the Elected Officials of the Town of Lady Lake for completion of the Institute for Elected Municipal Officials III: The Leadership Challenge held March 11-12, 2016 in Orlando, Florida.

We ask that the Certificate be presented as an agenda item for your next council meeting and be formally recorded in the minutes. We believe the importance of completing the Institute for Elected Municipal Officials III: The Leadership Challenge training should be known to key officials and your community.

Thank you so much for your cooperation on this. If you have any questions, please don't hesitate to call me at (850) 701-3619.

Sincerely,

Gail Dennard
Membership Development
Florida League of Cities

Enclosure

President **Matthew D. Surrency**, Mayor, Hawthorne
First Vice President **Susan Haynie**, Mayor, Boca Raton • Second Vice President **Gil Ziffer**, Commissioner, Tallahassee
Executive Director **Michael Sittig** • General Counsel **Harry Morrison, Jr.**

IEMO III:
THE LEADERSHIP CHALLENGE

Certificate of Completion

March 11-12, 2016 • FLC University, Orlando

Awarded to

Commissioner Dan Vincent

Town of Lady Lake

Sponsored by

Executive Director
Florida League of Cities

Executive Director
Florida Institute of Government

J-4

MINUTES OF THE REGULAR MEETING OF THE LADY LAKE TOWN COMMISSION LADY LAKE, FLORIDA

April 4, 2016

The regular meeting of the Lady Lake Town Commission was held in the Commission Chambers at Lady Lake Town Hall, 409 Fennell Blvd., Lady Lake, Florida with Mayor Ruth Kussard presiding. The meeting convened at 6:00 p.m.

A. CALL TO ORDER: Mayor Ruth Kussard

B. PROCEDURAL: *Citizens are encouraged to participate in the Town of Lady Lake meetings. Speakers will be limited to three (3) minutes. Additional time may be granted by the Mayor. Citizen groups are asked to name a spokesperson and the Mayor, at his/her discretion, may allow longer than three minutes. Upon being recognized by the Mayor, please approach the dais, state your name and address, and speak into the microphone. The order of agenda items may be changed if deemed appropriate by the Town Commission. Please be respectful of others and put your cell phone on silent mode.*

C. PLEDGE OF ALLEGIANCE

D. INVOCATION[i]: Rev. Jerry Montgomery, Immanuel Baptist Church

E. ROLL CALL: Tony Holden, Commissioner Ward 2
Dan Vincent, Commissioner Ward 3
Paul Hannan, Commissioner Ward 4
Jim Richards, Commissioner Ward 5
Ruth Kussard, Mayor/Commissioner Ward 1

STAFF MEMBERS PRESENT: Kris Kollgaard, Town Manager; Derek Schroth, Town Attorney; Thad Carroll, Growth Management Director; C. T. Eagle, Public Works Director; Chris McKinstry, Police Chief; Mike Burske, Parks and Recreation Director; Marsha Brinson, Library Director; and Nancy Slaton, Deputy Town Clerk

F. PUBLIC COMMENTS[ii]

Mayor Kussard asked if there were any comments at this time.

- Larry Edwards of 171 Palermo Place took this opportunity to ask if the Town could put any pressure on the county to have Rolling Acres Road widened to four lanes between US Hwy 27/441 and CR 466. He stated it is not currently adequate for the volume of traffic that it tries to handle, and that he understands that it is a county road and out of Lady Lake's jurisdiction. Mr. Edwards asked if there could be a business moratorium until there are signed plans to have the road widened. He also commented that if CR 466-A can be widened in Fruitland Park, perhaps Lady Lake can have something done.

Town Manager Kris Kollgaard took a moment to welcome Councilman Peter Tarby from Umatilla who was present in the audience.

Commissioner Hannan asked if there was a response to Mr. Edwards' comments.

Ms. Kollgaard replied that she has spoken with Mr. Edwards and also with the county. She stated the Town submits the widening of Rolling Acres road as a top priority every year to the county, but the problem is that there are not currently enough funds available in this district. She stated the county is looking at different ways to increase their funds.

Commissioner Richards also stated that the widening of Rolling Acres Road is on the Lake-Sumter Metropolitan Planning Organization's list of priorities, but that Lake County passed up the opportunity to collect additional funds when they decided not to collect impact fees on housing. He also stated that the widening of CR 466-A in Fruitland Park is being done by The Villages with impact fee monies and reimbursed back to them. He stated they also received approximately $2 million from the state because it was a priority of The Villages. Commissioner Richards commented that Lady Lake does not have the same sway in Tallahassee as some others. He stated that in regard to the business moratorium for Rolling Acres, if any development tries to go into that area, a traffic study would be done and it would preclude any more development on that particular road, although it would not cover the other roads as they are at capacity.

In response to a question from the audience, Commissioner Richards stated that a traffic study has already been done for Rolling Acres Road and that the Town has done everything it can to get the project on the books, other than supplying the monies.

G. PROCLAMATIONS:

1. Proclaiming the Week of April 10-16, 2016 as National Library Week (Mayor Kussard/Marsha Brinson)

Mayor Ruth Kussard read the proclamation proclaiming the week of April 10-16, 2016 as National Library Week. She presented the proclamation to Library Director Marsha Brinson.

2. Proclaiming the Month of April 2016 as Water Conservation Month (Mayor Kussard/C.T. Eagle)

Commissioner Jim Richards read the proclamation proclaiming the month of April, 2016 as Water Conversation Month. He presented the proclamation to Public Works Director C.T. Eagle.

3. Proclaiming the Month of April 2016 as Child Abuse Prevention Month (Mayor Kussard)

Mayor Ruth Kussard read the proclamation proclaiming the month of April, 2016 as Child Abuse Prevention Month.

H. CONSENT[iii]:

Mayor Kussard asked if there were any questions or comments on the Consent items. She asked that Item #H-6 be pulled for discussion.

4. Minutes – March 21, 2016 – Regular Commission Meeting

5. Consideration to Host the Annual Driving Range Volunteers Lunch at the Parks and Recreation Building on April 19, 2016 (Mike Burske)

The background summary for this agenda item is on file in the Clerk's Office. It states that the Lady Lake Driving Range has held a luncheon for the volunteers of the facility on an annual basis. Over the last couple of years, the Driving Range has utilized the Parks and Recreation Building for the ability to still hold the event without fear of weather being a factor. They utilize tables and chairs from Public Works and Parks and Recreation. The Driving Range supplies all of the food and drinks, and invites the range volunteers and many from the Town who assist them at the range. The event is scheduled for April 19, 2016. They will use a grill in the fenced area of the building compound. The Driving Range begins preparing food in the morning and starts serving around 11:00 a.m.

7. Consideration of Mutual Agreement/Renewal for Sanitary Sewer Rehabilitation Services (C.T. Eagle)

The background summary for this agenda item is on file in the Clerk's Office. It states that the Town identified a number of projects within the 2014 Wastewater & Reuse Master Plan. One of the priority projects was the implementation of a sanitary sewer rehabilitation program to rehabilitate a small number of concrete structures each year until completed. The mutual agreements proposed "piggybacks" the Palm Beach County contract that has been extended until January 2017 and the City of West Palm Beach contract which is effective until November 2017. The combination of the two contracts cover the extent of work required for this year's project. An estimated amount of $98,267 was budgeted for FY 2015-16. The proposals' total amounts are $113,570.43, with $145,030.95 available budget funds in that line item to cover any additional costs that may arise during the project.

Upon a motion by Commissioner Richards and a second by Commissioner Hannan, the Commission approved Consent Items #H-4, #H-5 and #H-7 by a vote of 5 to 0.

6. Consideration of the Second Extension to the Sewer & Water Utility Agreement for Village Veranda at Lady Lake, LLC, to Provide for an Additional Six (6) Months to Obtain a Building Permit and Reserve the Utility Capacity Already Purchased for the Development (Thad Carroll)

The background summary for this agenda item is on file in the Clerk's Office. It states that on April 6, 2015, the Town Commission approved the Sewer & Water Utility Agreement between the Town of Lady Lake and Village Veranda at Lady Lake, LLC ("Developer"), in the amount of $79,407.00, for the provision of 17 water equivalent residential units (ERUs) and 17 sewer ERUs, for the development of a 90 bed independent living facility, a 40 bed memory care facility, and 22,000 sq. ft. of commercial support uses to be developed in three phases.

Subject to the terms and conditions of the Sewer & Water Utility Agreement between the developer and the Town of Lady Lake executed on April 6, 2015, in Section 2 the language states, "Should Developer not obtain a building permit to initiate construction of the Developer's project noted above within 180 days of the date this Utility Agreement is approved by Commission, the capacity herein reserved will be forfeited and all money paid to reserve capacity shall also be forfeited. Should Developer fail to obtain a building permit within 180 days of the date this Utility Agreement is approved by Commission, Developer agrees to release any and all claims against the Town for a return of any of the money paid to reserve capacity."

On October 19, 2015, the Town Commission granted an extension of six months in response to a request to allow more time to finalize the construction plans and secure building permits for

construction; that extension expires on April 3, 2016. In accordance with Chapter 7, Section 10 b) 3)., the Town Commission may grant one or more extensions not to exceed two years.

At this time, Village Veranda at Lady Lake, LLC is requesting the second extension of the agreement for an additional six months to allow more time to finalize the construction plans and secure building permits for construction of the facility. Greg Beliveau, of LPG Urban & Regional Planners, Inc. has provided a letter dated March 24, 2016, requesting the extension. The extension would be valid through October 3, 2016.

The site plan for the project was approved by the Town Commission on March 2, 2015, and all ERUs have been purchased for the project in the amount of $79,407.00. The Town of Lady Lake has not increased the charges per ERU for sewer, water, or reuse since the execution of the original agreement. Failure to approve the extension will result in a forfeiture of the reserved capacity, as well as all fees paid. Staff recommends approval of the amendment as presented.

Mayor Kussard voiced her concern that this is the second extension to this agreement and only one more extension would be allowed under the terms of the agreement. She stated she would not like to see the developer lose the monies that have already been paid ($79,407.00). She asked how close the developer is to getting all the necessary permits for the development.

Greg Beliveau replied that the developer has already filed for their permits, and does not want to lose this money either. He stated they have also expended more money by participating in upgrading the lift station at the spa as they plan to tie into it, and are actively looking for other trustworthy financial partners. Mr. Beliveau stated they have had architectural renderings done and have met with staff and hope to move this forward.

Commissioner Hannan asked if this project will go down the tubes if the developer does not get funding.

Mr. Beliveau stated the developer is still expending money to keep this project alive and is making every effort to find a partner.

Upon a motion by Commissioner Vincent and a second by Commissioner Richards, the Commission approved Consent Item #H-6 by a vote of 5 to 0.

I. OLD BUSINESS: No old business.

J. NEW BUSINESS:

8. <u>Consideration of Approval for an Open House at the Lady Lake Public Library on April 15th to Celebrate National Library Week, April 10-16, 2016 (Marsha Brinson)</u>

Library Director Marsha Brinson gave the background summary for this agenda item (on file in the Clerk's office). She stated that National Library Week is celebrated every year to highlight the importance of public libraries to the community, and this year, the theme is "Libraries Transform". She stated that the Lady Lake Library is in the process of transforming itself to help improve the lives of our patrons through programs, classes, technology and a first rate collection of materials. Ms. Brinson stated that if approved, the library will host an Open House with library tours, informational handouts, displays and giveaways on Friday, April 15th, from 2:00-6:00 p.m. Light refreshments will be offered and paid for by the Friends of the Library. Ms. Brinson invited the Commissioners and the public to attend and see everything that the Lady Lake Library has to offer.

Upon a motion by Commissioner Hannan and a second by Commissioner Holden, the Commission approved the Open House at the Lady Lake Public Library on April 15th to Celebrate National Library Week by a vote of 5 to 0.

9. Consideration to Allow SECO Power to Install a New Light at the Lady Lake Driving Range for Added Security (Mike Burske)

Parks and Recreation Director Mike Burske gave the background summary for this agenda item (on file in the Clerk's office). He stated that the Lady Lake Driving Range is seeking permission to have SECO install a new security light near their storage for heavy equipment and fuel as their gas tank has been broken into in the past and their present light defeated. He stated that the new security light will be a very bright unit that will light the area where the equipment is stored. The Driving Range will pay for the installation of the new security light and the monthly bill for the light.

Upon a motion by Commissioner Holden and a second by Commissioner Richards, the Commission approved the consideration to allow SECO Power to install a new light at the Lady Lake Driving Range for added security by a vote of 5 to 0.

K. TOWN ATTORNEY'S REPORT:

10. Resolution No. 2016-103 – First/Final Reading – A Resolution of the Town Commission of the Town of Lady Lake, Florida, Adopting The Lake County Multi-Jurisdictional Hazard Mitigation Plan (Thad Carroll)

Town Attorney Derek Schroth read the resolution by title only.

Growth Management Director Thad Carroll gave the background summary for this agenda item (on file in the Clerk's office). He stated that on March 21, 2011, the Town of Lady Lake adopted the 2011-2016 Lake County Multi-Jurisdictional Hazard Mitigation Plan. He stated that since the plan was only valid through February 4, 2016, Lake County recently revised the plan in cooperation with participating municipalities of Lake County to develop the necessary plan, policies, and procedures to effectively plan and develop projects to protect the citizens of Lake County. Lake County adopted the plan on February 2, 2016, and now all participating municipalities can proceed with adopting the resolution.

A Local Mitigation Strategy (LMS) is a plan developed by the county to reduce and or eliminate the risks associated with natural and man-made hazards. These plans must be in accordance with the Disaster Mitigation Act of 2000 (DMA 2000). DMA 2000 is a mechanism for collaboration between state and local entities that encourages pre-disaster planning, recognizes need for mitigation, and designates funding for projects through Federal grant opportunities. Overall, the Lake County Local Mitigation Strategy Plan attempts to reduce some of the risk associated with hazard by implementing projects within Lake County and municipalities. The Federal Emergency Management Agency claims that for every dollar spent on a mitigation project, the benefit will be that four dollars is saved by the recipient in the long term. The Local Mitigation Strategy (LMS) is intended to be a framework for documenting the activities of the LMS working group and the future mitigation activities within Lake County.

DRAFT

It is Town staff's understanding that if the Town chooses not to adopt the plan, the Town could position itself as to be ineligible for funding when it comes to certain grants or assistance from FEMA during times of disasters.

Mr. Carroll stated that the plan will be updated again in a couple of years, and asked that the Commission approve this plan as prepared.

Mayor Kussard asked if the Commissioners or anyone from the audience had any questions, and hearing none, asked for a motion.

Upon a motion by Commissioner Holden and seconded by Commissioner Vincent, the Commission approved the first/final reading of Resolution No. 2016-103 by the following roll call vote:

HOLDEN	***YES***
VINCENT	***YES***
HANNAN	***YES***
RICHARDS	***YES***
KUSSARD	***YES***

11. Resolution No. 2016-105 – First/Final Reading – Safe Routes to School LAP Project #FPN 433200-1-58/68-01; Authorizing the Mayor to make, execute, and deliver to the State of Florida Department of Transportation the Local Agency Program Agreement for Project #FPN 433200-1-58/68-01 (Mike Burske)

Town Attorney Derek Schroth read the resolution by title only.

Parks and Recreation Director Mike Burske reported that this resolution is required before the Local Agency Program agreement from is accepted, which is the next agenda item. He stated this resolution brings the Town into the partnership for the Safe Routes to School LAP agreement.

Mayor Kussard asked if the Commissioners or anyone from the audience had any questions, and hearing none, asked for a motion.

Upon a motion by Commissioner Richards and seconded by Commissioner Hannan, the Commission approved the first/final reading of Resolution No. 2016-105 by the following roll call vote:

HOLDEN	***YES***
VINCENT	***YES***
HANNAN	***YES***
RICHARDS	***YES***
KUSSARD	***YES***

12. Consideration to Accept and Sign the Local Agency Program Agreement from F.D.O.T. District 5 for Construction Engineering and Inspection (CEI) Services and the Construction of the Villages Elementary School Sidewalks at CR25 through the Safe Routes to School Grant Program (Mike Burske)

Town Attorney Derek Schroth stated this is the actual agreement with F.D.O.T. concerning District 5.

DRAFT

Parks and Recreation Director Mike Burske gave the background summary for this agenda item (on file in the Clerk's office). He stated that this LAP Agreement is for $341,798.00 of grant funding through the Safe Routes to School Grant; also known as Phase II of the project as a whole, and will include Oak Ave and CR 25. This document is for the Construction Engineering and Inspection (CEI) Services, along with the construction of the sidewalks.

Mr. Burske stated that the CEI services are estimated by FDOT to cost $45,000.00, and Town staff has estimated the services to be $45,845.00. He stated that FDOT will only fund up to $45,000.00 for these services and anything over that will have to be paid by the Town, and that the Town will not know the actual cost until we negotiate with the potential firm. Mr. Burske stated that FDOT expects the construction to cost $296,798.00, and once again, if it comes in over this, the Town will have to pay for the additional expense. He stated he was able to negotiate with F.D.O.T. to raise their funding by nearly $35,000.00 in the last month and is confident that the money awarded will cover the costs. He stated the total is unknown until the bids are in for construction and the Town has negotiated with a CEI firm.

Town Manager Kris Kollgaard commented that if all the bids come in too high, the Town Commission can choose to not continue with Phase II, although she stated she does not believe there will be a problem with it.

Mayor Kussard asked if the Commissioners or anyone from the audience had any questions.

Greg Beliveau spoke up from the audience, stating his wife teaches at the Villages Elementary School; he asked if he could get a map of the area where the sidewalks are slated to go.

Ms. Kollgaard stated staff will email a map to him tomorrow morning.

Upon a motion by Commissioner Hannan and a second by Commissioner Holden, the Commission approved the consideration to accept and sign the Local Agency Program Agreement from F.D.O.T. District 5 for Construction Engineering and Inspection (CEI) Services and the construction of the Villages Elementary School Sidewalks at CR25 through the Safe Routes to School Grant Program by a vote of 5 to 0.

L. TOWN MANAGER'S REPORT:

13. Consideration of Three Reappointments to the Library Board (Kris Kollgaard)

Town Manager Kris Kollgaard read the background summary for this item (on file in the Clerk's Office). She stated that the terms of three Library Board members are expiring this month: James Page, Dorothy Grubb and Dr. Paul Harsh, and all three wish to be reappointed. There are no other current applications on file for this board.

The Commissioners were asked to make their selections. The following results were read into the record and tallied:

James Page received five votes (Commissioner Hannan, Commissioner Holden, Commissioner Vincent, Commissioner Richards and Mayor Kussard).

Dorothy Grubb received five votes (Commissioner Hannan, Commissioner Vincent, Commissioner Richards, and Mayor Kussard).

DRAFT

Dr. Paul Harsh received five votes (Commissioner Hannan, Commissioner Holden, Commissioner Vincent, Commissioner Richards and Mayor Kussard).

As a result, Mr. Page, Ms. Grubb and Dr. Harsh were reappointed as members of the Library Board.

14. Consideration of Two Appointments/Reappointments to the Economic Development Advisory Committee (Kris Kollgaard)

Town Manager Kris Kollgaard read the background summary for this item (on file in the Clerk's Office). She stated that two members of the Economic Development Advisory Committee have terms expiring this month. They are Sue Nord and Frank Kirschenheiter and both would like to be reappointed. There is also one application on file by Gil Pierson for consideration.

Commissioner Hannan asked if Mr. Pierson has applied for any other boards. He stated that he was on another board and is a good person, and it would be good if he could apply for another board.

Ms. Kollgaard confirmed that he was on a previous board.

Commissioner Richards stated Mr. Pierson has since moved out of town.

The Deputy Town Clerk commented that Mr. Pierson is only eligible to participate on the Economic Development Advisory Committee since he no longer lives in town (still works in town).

The Commissioners were asked to make their selections. The following results were read into the record and tallied:

Sue Nord received five votes (Commissioner Hannan, Commissioner Holden, Commissioner Vincent, Commissioner Richards and Mayor Kussard).

Frank Kirschenheiter received four votes (Commissioner Hannan, Commissioner Vincent, and Commissioner Richards).

Gil Pierson received one vote (Mayor Kussard).

As a result, Sue Nord and Frank Kirschenheiter were reappointed as members of the Economic Development Advisory Committee.

15. Consideration of Purchasing Informational Magnets from New World Graphics (Kris Kollgaard)

Town Manager Kris Kollgaard read the background summary for this item (on file in the Clerk's Office). She stated that staff is requesting to purchase 10,000 4"x7" emergency information magnets featuring useful numbers for the public. The magnets will contain important contact numbers essential for all residents to have on hand in case of an emergency and will include the police, Town offices, and frequently requested numbers in the area. The price of the magnets will depend on the size and quantity ordered. Ms. Kollgaard reported that staff contacted four vendors for pricing and New World Graphics was the least expensive, costing $418.00 for 10,000 magnets. She stated the magnets will be available at Town Hall, the library, the police department and at various Town activities, and that the Clerk's Office receives many calls for these types of numbers.

DRAFT

Commissioner Vincent asked if the magnet will include the non-emergency number for the police.

Ms. Kollgaard replied that it would.

Commissioner Holden asked how the magnets will be distributed.

Ms. Kollgaard replied that the magnets will be distributed at different events, and will be available at Town Hall, and during Commission meetings.

Commissioner Hannan asked if the Commissioners could get some to hand out to their constituents.

Ms. Kollgaard replied that they could.

Commissioner Richards asked which operating budget the cost of the magnets will come out of.

Ms. Kollgaard stated there are funds currently available either in the Clerk's Office or the Town Manager's budgets.

It was the consensus of the Commissioners to approve the purchase of informational magnets by a vote of 5 to 0.

Ms. Kollgaard stated that she requested from staff last year that each department come up with a standard operating procedure manual (SOP). She used the Clerk's Office manual as an example, stating that anyone coming in could follow the instructions to do any job in that department. She stated it is still a work in progress for some departments, and each department will keep them updated as necessary. Ms. Kollgaard stated the procedures are proving to be very valuable in helping to cross-train staff.

Commissioner Vincent stated this is a great idea as information known by long-standing employees could be lost if they left unexpectedly.

Ms. Kollgaard reminded the Commissioners to leave their tablets with the Deputy Town Clerk so they can be updated by I.T. staff this week. She reported that the changes to the LDRs regarding signs will be brought to the Planning and Zoning Board in May, and to the Commission for first reading by the last meeting in May, and for second/final reading at the first meeting in June. She stated that the CAFR presentation will be made at a 5:15 or 5:30 p.m. meeting prior to the Commission meeting on April 18th, if the Commission approves.

M. MAYOR/COMMISSIONER'S REPORT:

Commissioner Hannan presented Chief Chris McKinstry with police patches, which he exchanged with Lady Lake police patches, during his recent travels to Hungary, Austria, the Czech Republic and Slovakia. He read a prepared excerpt revealing where the patches came from and how he received them: two patches came from Linz, Hungary; one from Vienna, Austria; one from Bratislava, Slovakia; and one from Prague, Czech Republic. He stated he lost a patch from one of his favorite cities he visited, Ceske Budejovice in South Bohemia, Czech Republic, and he has emailed the hotel manager where he stayed to request that they ask their police department to provide another patch.

DRAFT

Chief McKinstry thanked Commissioner Hannan for the patches and stated he was glad he made it home safely. He passed them around to the Commissioners for viewing at the Town Manager's request.

N. PUBLIC COMMENTS[iv]

Mayor Kussard asked if anyone in the audience would like to speak on any item. There were no comments from the audience at this time.

O. ADJOURN: The meeting was adjourned at 6:45 p.m.

Kristen Kollgaard, Town Clerk

Ruth Kussard, Mayor

Minutes transcribed by Nancy Slaton, Deputy Town Clerk

[i] *Any invocation that may be offered before the official start of the Commission meeting shall be the voluntary offering of a private citizen, to and for the benefit of the Commission. The views or beliefs expressed by the invocation speaker have not been previously reviewed or approved by the Commission, and the Commission is not allowed by law to endorse the religious beliefs or views of this, or any other speaker.*

[ii] *This section is reserved for members of the public to bring up matters of concern or comments. It is not limited to items on the agenda and it is open to any concern or comments that the public may have.*

[iii] *All items listed under consent are considered routine by the Town Commission and will be enacted by one motion. There will be no separate discussion of these items unless a Town Commissioner so requests, in which event the item will be removed from the consent agenda and considered in its normal sequence.*

[iv] *This section is reserved for members of the public to bring up matters of concern or comments. It is not limited to items on the agenda and it is open to any concern or comments that the public may have.*

DRAFT

TOWN COMMISSION AGENDA ITEM

J-5

REQUESTED COMMISSION MEETING DATE: April 18, 2016

SUBJECT: Renewal of Memorandum of Agreement (MOA) with Lake Sumter Children's Advocacy Center

DEPARTMENT: POLICE

STAFF RECOMMENDED MOTION: Approval of the renewal of the MOA with Lake Sumter Children's Advocacy Center

---

SUMMARY:

This is a renewal of an existing MOA with Lake Sumter Children's' Advocacy Center (CAC). The Lady Lake Police Department and the Lake Sumter Children's Advocacy Center recognize the strength of a Multidisciplinary Team is the varied training and expertise that each member contributes when conducting child sexual abuse and/or child criminal physical abuse. This renewal MOA has been expanded to include the services of the Child Protection Team because the CAC now holds that contract from the Florida Department of Health.

Town Attorney Derek Schroth has reviewed this MOA.

FISCAL IMPACT: $0

[ ] Capital Budget
[ ] Operating
[ ] Other

ATTACHMENTS: [ ] Ordinance [ ] Resolution [ ] Budget Resolution

[ ] Other

[X] Support Documents – MOA w/ Lake Sumter CAC

DEPARTMENT HEAD	Submitted	Date 3/30/2016
HR	Approved as to Form	Date
FINANCE DEPARTMENT	Approved as to Budget Requirements	Date
TOWN MANAGER	Approved Agenda Item for: 4/18/16	Date 4/12/16

Reviewed

COMMISSION ACTION:

[ ] Approved as Recommended [ ] Disapproved [ ] Tabled Indefinitely

[ ] Continued to Date Certain [ ] Approved with Modification

LAKE COUNTY
300 S. Canal St.
Leesburg, FL 34748
Phone: (352) 323-8303
Fax: (352) 323-1394

LAKE SUMTER
Children's Advocacy Center

SUMTER COUNTY
1601 W. Gulf Atlantic Hwy.
Wildwood, FL 34785
Phone: (352) 748-3156

March 22, 2016

Chief Chris McKinstry
Lady Lake Police Dept.
423 Fennell Road
Lady Lake, FL 32159

Dear Chief McKinstry,

Please find enclosed a copy of the proposed Memorandum of Agreement (MOA) between your agency and the Lake Sumter Children's Advocacy Center. This MOA outlines the services that each agency provides to child abuse victims and also explains how our agencies work together.

It is requirement of the National Children's Alliance, our accrediting agency, that we have a signed MOA with the community partners that work with us providing services to child abuse victims. Your agency has signed a similar document in the past with our agency. This revised MOA has been expanded to include the services of the Child Protection Team because our CAC now holds that contract from the Florida Department of Health.

I would respectfully ask that you review this MOA and, if you are comfortable with the contents, sign and return the signature page only to me in the enclosed envelope. If you would like to discuss anything in the MOA, please feel free to contact me a 352-323-8303 or diane@cac4kids.org and I would be happy to speak with you.

I would ask that you please sign and return the signature page to me by April 15, 2016. The MOA would become effective May 1, 2016 and last through May 1, 2019.

Thank you for your past help in coordinating services for child victims of abuse. I look forward to continuing our good working relationship.

Sincerely,

Diane L. Pisczek, M.Ed
Executive Director

NATIONAL CHILDREN'S ALLIANCE®
ACCREDITED MEMBER

child protection team
Children's Medical Services

LAKE COUNTY
300 S. Canal St.
Leesburg, FL 34748
Phone: (352) 323-8303
Fax: (352) 323-1394

LAKE SUMTER
Children's Advocacy Center

SUMTER COUNTY
1601 W. Gulf Atlantic Hwy.
Wildwood, FL 34785
Phone: (352) 748-3156

Memorandum of Agreement

CHILD ABUSE INVESTIGATIVE PROTOCOL
May 1, 2016 to May 1, 2019

The Lake Sumter Children's Advocacy Center (CAC) recognizes that the strength of the Multidisciplinary Team (MDT) is the varied training and expertise that each member contributes. In addition, it is understood team members must abide by Florida Statutes, their employers' policies and/or agency protocols. The MDT is comprised of a group of identified individuals (or their designees) who respond together to allegations of abuse (as defined by this agreement) in Lake and Sumter Counties. This group also meets at regularly scheduled times to serve as the case review team for cases referred to the MDT for review. Criteria for cases referred to the MDT are defined in this document.

The MOA is signed by identified agency directors or senior management who have reviewed the MOA and agree to the procedures outlined herein. The MOA will be reviewed and updated every three years. This review process will be initiated by the Executive Director of the CAC.

Each team member will follow their approved protocol for investigating alleged child sexual abuse and/or physical abuse. The identified participants agree to abide by this memorandum of Agreement in an effort to ensure:

- Timely response to alleged child abuse allegations in Lake and Sumter Counties
- Coordination of investigative, prosecution and treatment efforts.
- Child victims access needed services in a child-friendly environment
- Child victims and/or children at risk of abuse are protected from imminent harm
- Child victims are seen in Lake or Sumter County.
- Victims and alleged offenders are kept separate at all times.

Composition of the Team

The MDT will be facilitated by the CAC Clinical Supervisor. The team may be composed of representatives of the following agencies and disciplines:

- Lake Sumter Children's Advocacy Center

NATIONAL CHILDREN'S ALLIANCE®
ACCREDITED MEMBER

child protection team
Children's Medical Services

- Lake Sumter Children's Advocacy Center Child Protection Team (CPT)
- Department of Children and Families (DCF)
- Lake Sumter Children's Advocacy Center Clinical Supervisor
- Sheriff's Office
- Local Law Enforcement
- State Attorney's Office
- Lake Sumter Children's Advocacy Center Victim Advocate
- School Social Workers
- Guardian ad Litem

Case Referral Criteria:

Children between the ages of birth to 18 who meet the criteria below are referred for CPT services.

Sub section 39.303 (2). Florida Statutes specifies the types of cases that must be referred by DCF to CPT for assessment and other appropriate available support services. Mandatory referral cases include those involving:

- Injuries to the head, bruises to the neck or head, burns, or fractures in a child of any age
- Bruises anywhere on a child five years of age or younger
- Any report alleging sexual abuse of a child
- Any sexually transmitted disease in a prepubescent child
- Reported medical neglect of a child
- Any family in which one or more children have been pronounced dead on arrival at a hospital or other health care facility, or have been injured and later dies, as a result of suspected abuse, abandonment, or neglect, when any sibling or other child remains in the home.
- Symptoms of serious emotional problems in a child when emotional or other abuse, abandonment, or neglect is suspected.

Non-mandatory cases may also be referred and will be staffed with the Senior Case Coordinator to determine if forensic interviews and or medical exams are appropriate.

Investigating members of the MDT (Law Enforcement and DCF) will be able to utilize the CAC to facilitate taped forensic interviews and medical exams. A forensic interview or forensic medical exam can be scheduled by first calling the CAC Child Protection Team (CPT) Senior Case Manager at (352-323-8303) to staff the case. If CPT determines the case meets the criteria for a forensic interview or forensic medical exam, as determined by criteria in the CPT Handbook and listed above, it will be scheduled. The CAC agrees to make the Center available for such interviews/exams during regular business hours (8:30AM to 5:00PM Monday through Friday - 352-323-8303), or afterhours for cases that are determined by Law Enforcement, DCF and CPT to be an emergency. The emergency on-call phone will be available afterhours, on weekends, and holidays at (352-459-3058). DCF will notify the appropriate Law Enforcement Agency of the date and time of the forensic interview and/or medical exam.

The Department of Children & Families, Circuit 5, and Protective Investigation Unit will:

- Investigate alleged child abuse within the guidelines of Statute 39
- In those cases where Law Enforcement assumes primary investigative jurisdiction, DCF shall coordinate with the investigating Law Enforcement agency prior to scheduling a forensic interview and /or forensic medical examination of a child victim.
- Transport, accompany, or meet the child victim at the CAC for the purpose of a forensic interview and /or forensic medical examination.
- Provide, to CPT intake person, pertinent information about the alleged abuse, as well as family history regarding prior investigations; time frame of most recent event; details related to where the abuse took place; information related to collaborating statements of family members, teachers or neighbors.
- Consult with law enforcement, CPT, State Attorney's Office and/or other community professionals regarding the necessity of conducting a medical examination for the purpose of collecting evidence of abuse.
- Provide information on the case disposition for case tracking purposes.
- Refer child victims to the CAC for counseling, when appropriate.
- Designate appropriate Child Protective Investigator to participate in Multi-disciplinary Team Case Review held the 1st and 3rd Wednesday of every month at 9:15AM at the CAC (Lake County) or the 2nd and 4th Wednesday of every month in room 2175 of the DCF Building in Wildwood (Sumter County), to ensure child victims access all available and necessary services.
- Participate in emergency Multidisciplinary Team Case Review when appropriate.

Determination of Crucial Information:

The DCF investigator will determine the following:

- validity of the complaint
- extent of the injuries
- need for immediate emergency medical treatment
- existence of prior abusive reports
- extent additional referrals are made for medical evaluations that may be required to collect evidence, including notifying law enforcement prior to any forensic medical exam
- need to remove the child from an abusive environment

The evaluation (interview and examination) done to determine this information shall be conducted in a manner which preserves the health and dignity of the child while obtaining the facts necessary to pursue the case through legal channels. Every effort should be made to interact with the child in a non-threatening, child friendly environment such as the CAC. DCF shall immediately notify the appropriate Law Enforcement Agency, if required, upon receipt of a child abuse complaint and shall provide the agency with a copy of the complaint.

The appropriate Law Enforcement investigator is to be notified by DCF prior to the medical exam or forensic interview. The DCF investigator should obtain the LE case number to determine the detective assigned to the case. E-mail and telephone communication should be utilized to contact other agencies. A specially trained CPT interviewer will conduct the Forensic Interview at the CAC by scheduled appointment. Taped interviews are evidence; they become the property of LE since the rules of evidence custody will apply. Forensic Interviews should be in conjunction with the medical exam, when possible.

Referrals

Investigators are to contact CPT to refer all cases mandated by Chapter 39. Non-mandatory cases may also be referred at DCF's discretion. Non-mandatory cases will be staffed with the Senior Case Coordinator to determine the need for a Forensic interview/medical exam. Investigators should be prepared to provide the following information:

- Child's name, date of birth, social security number
- Race and gender
- Parents and sibling(s) name, date of birth, social security number (if available)
- Address/City, all applicable telephone numbers
- Allegation made
- Most recent contact with alleged perpetrator
- Is the situation considered emergent and why.
- Current location of the child
- Child's current safety status
- Prior DCF reports on family.
- Observations and statements from child and other household members.

Community Law Enforcement will:

- Notify DCF if determination is made that the case involves DCF.
- Participate in the initial contact investigation of alleged child abuse that may result in criminal charges.
- Provide pertinent information relevant to the case to include:

    1. Child's name, date of birth, social security number
    2. Race and gender
    3. Parents and sibling(s) name, date of birth, social security number (if available)
    4. Address/City, all applicable telephone numbers
    5. Allegation made

- Most recent contact with alleged perpetrator
- Is the situation considered emergent and why.
- Current location of the child/current safety status of the child

- Request a forensic medical examination from CPT immediately, or no later than within 72 hours, for children sexually victimized for the collection of DNA and other evidence, when needed.
- Share relevant information related to the alleged abuse with Multidisciplinary Team
- Provide information, as provided by law, on the case disposition for case tracking purposes.
- Refer child victims to the CAC for counseling, when appropriate.
- Case Detective or designee will participate in Multi-disciplinary Team Case Review held the 1st and 3rd Wednesday of every month at 9:15AM at the CAC (Lake County) or the 2nd and 4th Wednesday of every month in room 2175 of the DCF Building in Wildwood (Sumter County), to ensure child victims access all available and necessary services.
- Case Detective or designee will participate in emergency Multidisciplinary Team Case Review when appropriate.

The State Attorney's Office will:

- Observe the video-taped forensic interview as requested and available.
- Assist law enforcement and DCF in determining the validity of criminal prosecution.
- Provide information on the case disposition for case tracking purposes.
- Share relevant information related to the alleged abuse with MDT
- Provide the SAO Victim Advocate who will:
    1. Educate the family about the criminal justice system
    2. Keep the family apprised throughout the criminal justice process

- Participate in Multi-disciplinary Team Case Review held the 1st and 3rd Wednesday of every month at 9:15AM at the CAC (Lake County) or the 2nd and 4th Wednesday of every month in room 2175 of the DCF Building in Wildwood (Sumter County), to ensure child victims access all available and necessary services.
- Refer child victims to the CAC for counseling, when appropriate.
- Participate in emergency Multidisciplinary Team Case Review when appropriate.

The Lake Sumter Children's Advocacy Center/Child Protection Team will:

- Determine the initial need for a forensic medical exam based upon reported allegations and observations reported by the Protective Investigator, Law Enforcement, and/or information gathered during the forensic interview.
- Determine the need for a forensic interview based upon criteria established in this MOA.
- Provide a Forensic Interviewer who has been trained in accordance with the APSAC guidelines.
- Conduct a video-taped forensic interview at the request of law enforcement or DCF when it is deemed appropriate and meets established criteria.
- Provide a qualified medical provider trained specifically in child abuse to provide timely

medical exams for alleged abused children.

- Provide, at minimum, a verbal report to investigators at the conclusion of the medical examination and/or interview.
- Provide written CPT reports to DCF and/or law enforcement within 10 business days of the medical exam and/or interview.
- Provide a written CPT report of a social assessment to DCF and/or law enforcement within 20 business days.
- Facilitate quarterly partner meetings to include MDT members to allow feedback on the CAC/CPT procedures and operational policies. This meeting will also allow discussion on team communication issues and other issues affecting case progression. Meeting will be facilitated by the CPT Team Coordinator.
- Participate in Multi-disciplinary Team Case Review held the 1st and 3rd Wednesday of every month at 9:15AM at the CAC (Lake County) or the 2nd and 4th Wednesday of every month in room 2175 of the DCF Building in Wildwood (Sumter County), to ensure child victims access all available and necessary services.
- Participate in emergency Multidisciplinary Team Case Review when appropriate.

The Lake Sumter Children's Advocacy Center will:

- Provide a neutral, child friendly, safe environment where child victims can receive services.
- Provide a volunteer Victim Advocate to child victims and non-offending family members when required.
- Provide crisis intervention during the initial visit and as needed to the child victims and their non-offending family members.
- Provide crisis counseling to child victims and family members as needed.
- Provide workspace, as available, to law enforcement, protective investigators and the State Attorney's Office.
- provide court education to child victim and family utilizing CAC Volunteer Victim Advocate
- disseminate child abuse statistical information, as appropriate, within the community
- create community awareness related to the issues of child abuse
- coordinate periodic community training to improve skill level in the investigation of child abuse and service provision to child abuse victims
- Track case information until final disposition in NCAtrak database and share with MDT members as appropriate.
- Provide counseling to child victims of abuse, utilizing Trauma Focused-Cognitive Behavioral therapy, and make outside referrals to other mental health agencies when appropriate.
- Facilitate and participate in Multi-disciplinary Team Case Review held the 1st and 3rd Wednesday of every month at 9:15AM at the CAC (Lake County) or the 2nd and 4th Wednesday of every month in room 2175 of the DCF Building in Wildwood (Sumter County), to ensure child victims access all available and necessary services.

- Facilitate and participate in emergency Multidisciplinary Team Case Review when appropriate.

Team Information Sharing

- Information about child abuse allegations, investigations, charges, and any evidence collected will be shared among the team members at the MDT meetings in accordance with Florida statutes and relevant judicial rules. All proceedings of team meetings will be confidential and signed statements of confidentiality will be maintained for each case reviewed by the team. Legal, ethical, and professional standards of practice will be upheld to ensure client privacy.

MDT Case review meetings:

- The MDT will meet for case review on the 1st and 3rd Wednesday of each month in Lake County. Meeting will be held at 9:15AM at the CAC at 300 S. Canal St., Leesburg, FL. All participating agencies will be notified of the docket for case review in advance of the MDT meeting. Scheduling, docket preparation and distribution for Lake County will be the responsibility of the Senior CPT Case Coordinator at the CAC. The MDT will meet in Sumter County on the 2nd and 4th Wednesday of each month at 9:30AM at the DCF office in Wildwood, FL. Scheduling, docket preparation and distribution for Sumter County will also be the responsibility of the Senior Case Coordinator.
- Case review meetings will be utilized as an opportunity for team members to increase their understanding of the complexity of child abuse cases.
- Recommendations for further action will be noted by the CAC Clinical Supervisor who serves as the MDT Facilitator.

In regards to the Forensic Interview. A forensic interview is a structured interview to elicit a complete and accurate narrative of facts from the alleged child or adolescent victim in a manner that is legally sound, neutral, and fact finding in nature, to determine whether the child or adolescent has been abused (or is at imminent risk of abuse) and, if so, by whom.
Forensic interviews are conducted by a trained CAC/CPT interviewer. A forensic interview is conducted with the alleged victim child only, while a specialized interview may extend to family members or other parties in a child abuse investigation. The date and time of the interview is documented in the chronological case progress record of the case file, along with the names and roles of all persons observing the interview. Documentation of the written report includes the following:

- Date of the interview
- Location of the interview

- Name of the CPT case coordinator or other trained professional conducting the interview
- Abuse Report number
- Name of the child being interviewed and DOB
- The agency or individual requesting the interview
- Summary of the interview
- Interview findings (related to the alleged abuse or neglect and any other pertinent
- information)
- Method of recording the interview (if recorded)

While there are no established guidelines that set specific ages for determination of the appropriateness for interviewing children forensically, there are research studies that suggest that children under the age of 4 are at higher susceptibility for suggestibility and memory issues than older children. Decisions to interview children under the age of 4 should be based on a sound and thorough developmental assessment. This assessment will be done by CPT in collaboration with DCF and/or Law Enforcement.

All forensic interviewers will complete the 40 hour APSAC training on forensic interviews.

Forensic Interview Protocol:

- DCF CPI and/or Law Enforcement shall contact CPT to staff the case with the Senior Case Coordinator and request a forensic interview. Interview will be scheduled by CPT when it is deemed appropriate and meets criteria established in the CPT handbook and this MOA. The CPT handbook is available for review by MDT members. CPT will attempt to schedule the interview at a time best suited for DCF, Law Enforcement and the family.
- Interviews will be conducted by CAC/CPT trained staff in a manner consistent with APSAC suggested standards for forensic interviews. Each child will be evaluated individually and appropriate APSAC interview components will be utilized. The following components may be utilized for the forensic interview:

    1. Introduction of Self, Role and Purpose of the Interview
    2. Informing child about documentation method
    3. Reviewing "Ground Rules" with child. Giving permission to say "I don't know." Giving permission to correct interviewer mistakes. Giving permission to admit lack of understanding.
    4. Convey to the child that the interviewer does not know what happened and can't help the child with his/her answers.
    5. Give permission to admit lack of memory.
    6. Give permission not to answer
    7. Explain repeated questions
    8. Truth/Lie Discussion

- Eliciting a promise to tell the truth
- Assessing truth/lie competency

9. Narrative event practice
10. Introducing topic of concern
11. Substantive questions to gather details
12. Closure

- The CPT Team Coordinator will determine which Forensic Interviewer is appropriate for the case. This will be determined by the availability of each interviewer, prior contact with the child, objectivity, knowledge of forensic interviewing techniques, experience in interviewing child victims, ability to establish rapport with the child, and any special needs such as language, cultural considerations etc. The Team Coordinator will also determine the need for any interpreters if the child speaks another language or if the child requires a sign language interpreter. DCF has a working relationship with the Florida Deaf Academy to provide sign language interpreters if needed. The CAC also currently has 2 trained forensic interviewers who speak Spanish. If other languages are required, the CAC maintains a list of interpreters or is able to access interpreters through the Language Line through DCF.
- To ensure privacy for the child, observing the interview will be limited to those MDT investigative members directly involved in the investigation (Law Enforcement and DCF.) This will assist in coordinating information gathering to avoid duplication by team members.
- The CPT Case Coordinator will meet with appropriate law enforcement, DCF personnel and other MDT investigative members prior to the interview to ascertain any necessary information and/or questions prior to the interview.
- Developmental and cultural factors that may influence communication between the child and the interviewer will be explored and addressed. This is accomplished through a pre-interview with the parents/caretakers to identify any developmental issues that the child may have or any cultural factors that may impact the interview.
- Interview will be recorded on the CAC I Record System. DCF, State Attorney, and Law Enforcement will receive a copy of the recorded interview on DVD upon request in accordance with Florida Statutes.
- CPT Case coordinator will utilize language appropriate to the child victims' individual developmental level.
- There is opportunity for team members to communicate with one another before the interview is concluded. This will usually be accomplished by the forensic interviewer taking a short break before the end of the interview to confer with team.
- A written report to Child Protective Investigator and /or Law Enforcement will be provided by the CPT interviewer within 10 days of the conclusion of the interview.

Forensic Medical Exam

The determination to conduct a medical exam must be evaluated individually; however the Florida Department of Health suggested guidelines to CPT include:

- Acute physical and/or sexual abuse
- Allegations of medical neglect

The medical exam is often an important corroborative part of the investigation. The physical examination of a child has several purposes:

- Ensure the health and safety of the child
- Reassure the child about what has happened to his or her body
- Identify and document physical and forensically significant findings that may be a result of the alleged abuse.

The examination may also serve to diagnose and treat medical conditions related to the child's physical and/or sexual abuse including sexually transmitted infections and pregnancy.

Law Enforcement and DCF are responsible for consulting with the CPT to request a medical exam by calling 352-323-8303. All pertinent information such as documentation of body bruising, vaginal or anal penetration, date of alleged penetration, etc. related to the request of forensic medical exam is to be communicated to the CPT intake person. Every effort will be made to coordinate the times of the forensic interview and the forensic medical exam in order to avoid duplicative history taking and interviewing.

Medical exams will be conducted at the CAC during the hours of 8:30AM to 5:00PM Monday through Friday or afterhours on an emergency basis. It is requested that the investigating officer and/or DCF accompany the child to the exam in order to provide pertinent information.

Situations requiring emergency exams: Urgent exams may be indicated in the following cases:

- Pre verbal children whose age makes injuries suspect
- Children whose injuries make returning to their environment of origin potentially dangerous
- Alleged sexual abuse in which there are evidence collection issues

In regards to the Forensic Medical Exam, the CAC/CPT will:

- Determine the initial need for a forensic medical exam based upon established criteria and the reported allegation and observations reported by the Protective Investigator and/or information gathered during the forensic interview
- Provide a Children's Medical Services approved Advanced Registered Nurse Practitioner or Pediatrician, approved by the Child Protection Team State Medical Director, to provide timely medical exams for alleged abused children.
- Provide, at a minimum, a verbal report to investigators and Law Enforcement accompanying the child to the exam at the conclusion of the medical examination.
- provide medical exam report for DCF/Law Enforcement within 10 days, or less, of examination
- Document medical findings according to professional standards and share with the MDT as appropriate. Data regarding whether an exam was conducted, the medical provider's

name, and any findings will be documented in the CAC case tracking system (NCAtrak.)

- Convey the need for additional medical testing e.g. HIV, X-rays, CT scans, MRI's etc. to appropriate MDT members in order to maintain clear communications and a team effort to protect the child.
- Following the collection/packaging of specimens for STD testing, the CPT Medical Provider will contact LabCorp to pick the specimens up at the CAC. Test results will be sent to CAC/CPT Medical provider.
- As per the Center for Disease Control STD guidelines, Plan B and prophylactic antibiotics will be dispensed when deemed necessary by the CPT medical provider.
- Evidence collected for the Florida Department of Law Enforcement (FDLE) will be packaged according to FDLE guidelines and given to Law Enforcement at the conclusion of the medical exam.

Mental Health Services will be offered to all clients and non-offending family members.

The purpose of mental health services is:

1. Reduce the emotional impact of disclosure of physical and/or sexual abuse and neglect
2. Promote healing, self-awareness, and self-growth.
3. Change individual behavior and family relationships to reduce/eliminate the risk of abuse/neglect occurring in the future.

- The CAC will provide Mental Health Services at no charge to child victims and their non-offending family members. Mental Health services are accessible to all clients in several ways:
    1. Mental health services are offered to child and family during Crisis counseling immediately following the forensic interview.
    2. Other community agencies may refer a child victim of abuse by completing the Counseling Referral Form and returning the form to the CAC Clinical Supervisor. The Clinical Supervisor will then follow-up with the family.
    3. Parents or caretakers can refer their child to services by contacting the CAC Clinical Supervisor.
    4. Self -referrals from children will also be accepted. The Clinical Supervisor will follow up on these referrals and will obtain the necessary parent or caretaker permissions.
- A client may opt to engage in mental health services from a private provider not located at the CAC. A release of information signed by the parent/guardian will allow communication between the CAC and the private provider.
- Mental health records will be stored in a locked filing cabinet. Online records are recorded in the CAC database, NCAtrak that is password protected.
- Mental Health services will be provided by designated qualified mental health staff. All Mental Health Staff will be, at a minimum, Master's Level.
- Counselors do not provide forensic interviews and forensic interviewers do not provide counseling. These services are separate. Additionally, the intent of mental health

services is for treatment and will not be investigative in nature.

The CAC Clinical Supervisor or designee will:

- Participate in case review to assist in evaluating children's mental health treatment needs and monitor the child's mental health to share with MDT team.
- Provide information on mental health service options for child victim and non-offending family members
- Accept referrals for counseling from the family of the victim or other agency representatives who may be working with the child.
- Conduct a Trauma Assessment on each child entering counseling. The Children's Functional Assessment Rating Scale is administered to all children pre and post counseling. The UCLA PSTD Reaction Index for Children/Adolescents is administered as appropriate.
- Provide an initial clinical assessment of the child victim and non-offending family members based on Crisis Counseling provided after the Forensic Interview. This will be reviewed by the clinical supervisor who will assign the case to a CAC counselor after the case is staffed in the weekly clinical staffing.
- Provide appropriate mental health services to the child victim based on their assessment results that incorporates Trauma Focused-Cognitive Behavioral Therapy. Services may include individual counseling, Family Counseling, Play Therapy, Animal Assisted Therapy, Art Therapy or Group Therapy.
- Refer to outside Mental Health Providers, who practice TF-CBT therapy, upon the family request.
- Record data that includes the provider's name, attendance information, and progress towards established goals in the CAC case tracking system.
- Provide individual or group therapy to the non-offending parent and/or other family members on an as needed basis or refer for services outside the CAC.
- Facilitate and participate in Multi-disciplinary Team Case Review held the 1st and 3rd Wednesday of every month at 9:15AM at the CAC (Lake County) or the 2nd and 4th Wednesday of every month in room 2175 of the DCF Building in Wildwood (Sumter County), to ensure child victims access all available and necessary services
- Participate in emergency Multidisciplinary Case reviews when necessary

The CAC will provide the following Victim Advocacy services:

The primary role of the victim advocate is to provide information, crisis intervention, and assistance to the child victim and the victim's family. Information regarding the dynamics of abuse and the MDT response to their case will be explained by the victim advocate. Support services will also be offered by the victim advocate to include: follow-up contact via in-person contact, phone or correspondence to victims and non-offending caregivers. MDT members will coordinate and share information with the Victim Advocate pertaining to appropriate support services needed for the child victim and family. Client feedback

information forms will be given on a periodic basis to non-offending parents and/or caretakers and returned to the Victim Advocate Coordinator for analysis. The CAC will provide a Victim Advocate representative, when needed, to be a member of the Multidisciplinary Team.

The Victim Advocate will:

- Provide information regarding the dynamics of abuse, the MDT response, and services offered at the CAC.
- Provide the parties involved with information regarding the civil and/or criminal justice system and be a consistent contact person throughout the criminal justice process as needed.
- Provide the child victim and family with a better understanding of the criminal justice system and their role in it as needed.
- Educate family about process and available therapeutic and legal services.
- Provide information and referral services to victim and family.
- Provide assistance to apply for Victim Compensation through the Attorney General's Office.
- Keep team members informed of the family dynamics and the child/family's attitude toward prosecution.
- Accompany the child and family to court when needed.
- Participate in Multi-disciplinary Team Case Review held the 1st and 3rd Wednesday of every month at 9:15AM at the CAC (Lake County) or the 2nd and 4th Wednesday of every month in room 2175 of the DCF Building in Wildwood (Sumter County), to ensure child victims access all available and necessary services
- Participate in emergency Multidisciplinary Team Case Review when appropriate.

Multidisciplinary Team Case Review Protocol

Multidisciplinary Team Case Review for Lake County will be conducted as a team approach on the1st and 3rd Wednesday of every month at the CAC beginning at 9:15AM at 300 S. Canal St., Leesburg, FL or as caseloads require. MDT Case Review for Sumter County will be held on the 2nd and 4th Wednesday of each month at the DCF office in Wildwood, FL at 9:30AM.

The following format will be utilized:

Nothing in the Agreement is meant to supersede federal law, state statutes, or local ordinances. In the event any provision in these guidelines becomes inconsistent with Federal law, state statutes, or local ordinances, the federal law, state statute, or local ordinance will prevail.

Multidisciplinary case reviews are meant to assist in the investigation and prosecution and to avoid gaps in the system of care for the child victim and their family. Any investigative information shared at case review is within the total discretion of the originating agency. Each agency shall

operate within their own specific guidelines, mandates, and procedures.

All parties shall keep confidential any information received as part of the multidisciplinary case review team pursuant to Florida statutes Section 119.07.

MDT Case Review Procedure:

- CAC Clinical Supervisor (or designated staff person) will facilitate MDT case reviews.
- team members will be notified by the Senior Case Coordinator through email in advance of cases to be reviewed
- MDT members will sign confidentiality forms for each case reviewed.
- A verbal update will be presented at the MDT case review by each MDT member interacting with the designated victim and/or family.
- the formal medical report will be discussed by the CPT medical provider, when appropriate
- A designated MDT member will take notes during the staffing. These notes include a summary of the discussion, the action plan decided upon by the MDT, the person responsible for each action item and the due date for the item to be completed.
- Documentation of the MDT Case review is entered into the CAC NCAtrak data base.
- MDT members who are not able to attend the meeting will be provided with a call in number on a designated conference line to participate. They may contact the Senior Case Coordinator for this information.

Criteria for referral:

- Serious physical injury or serious neglect.
- Sexual abuse of a child (after consultation with CPT intake personnel)
- Three or more prior reports on any identified child.
- Complex cases that place a child at high risk for safety.
- Chronic neglect that impacts safety and well-being of child.
- Verified medical neglect of a child.
- Allegations of Human Trafficking of a child.

Multidisciplinary Team Training

The CAC/CPT agrees to facilitate, and/or arrange periodic trainings that will ensure all Multidisciplinary Team members have a minimum level of comprehension of:

- child interviewing techniques
- the role of law enforcement in child abuse cases
- the role of the Department of Children & Families in child abuse cases
- the role of the State Attorney's Office in child abuse cases
- the role of the physician/ARNP in child abuse cases

- the role of the CAC/CPT in child abuse cases
- the role of a multidisciplinary team in child abuse cases.

TERMINATION OF AGREEMENT:

Either party may terminate this agreement at any time within its sole discretion with or without cause by providing 30 days written notice prior to termination.

CONFIDENTIALITY

MDT Members and/or their representatives will abide by the laws of confidentiality as outlined in Florida Statute regarding children who are victims of abuse.

At all times, confidentiality will be observed. All members of the MDT will have access to information not available as public information. Team members are expected to be sensitive to the need to share information only "on a need to know basis."

Upon execution of this Agreement by all parties, a copy of the signatory page for each agency will be provided to all participating agencies.

Agency Name: _____

_____

Signature

_____ _____

Printed/Typed Name **Title**

TOWN COMMISSION AGENDA ITEM

L-6

REQUESTED COMMISSION MEETING DATE: April 18, 2016

SUBJECT: Consideration of the purchase of one (1) portable radar speed display and message sign to enhance traffic safety and community awareness and to utilize the Town Forfeiture/Law Enforcement Trust Fund account to finance this purchase.

DEPARTMENT: POLICE

STAFF RECOMMENDED MOTION: Approval of the purchase of one (1) portable radar speed display and message sign to enhance traffic safety and community awareness and to utilize the Town Forfeiture/Law Enforcement Trust Fund account to finance this purchase.

SUMMARY: Portable, variable message signs are devices that can be temporarily installed along roadways to display messages relating to everything from speed violations to traffic conditions to community events. The Lady Lake Police Department currently has one large message board and trailer in our inventory. Although it is extremely beneficial, positioning a large message board in certain congested locations can be problematic. Since a common concern from residents relates to vehicles exceeding the speed limit in our residential neighborhoods with limited parking availability, this portable model can be mounted to existing street signs so as not to create an additional obstruction. The portable message sign recommended by staff weighs only 26 pounds, has an integrated radar connected to the sign display allowing the PD to utilize the message sign for multiple purposes including speed awareness. Traffic Safety Corp., Traffic Calm Systems, and Traffic Logix were all unable to provide this equipment as described. All Traffic Solutions was the only company found that was able to provide the equipment as requested.

Town Auditor Chet Ross has confirmed that this request complies with the provisions of Section 932.7055, Florida Statutes (LETF). If this purchase is approved the remaining balance in the Town Forfeiture/Law Enforcement Trust Fund account will be $1171.00.

FISCAL IMPACT: **$4635.00**

(Forfeiture/Law Enforcement Trust Fund 2101-521-4990)

[ ] **Capital Budget**
[ ] **Operating**
[X] **Other** (Balance ($5,806)

ATTACHMENTS: [ ] **Ordinance** [ ] **Resolution** [ ] **Budget Resolution**

[ ] **Other**

[X] **Support Documents – Sole Source Letter / Item Description**

DEPARTMENT HEAD	**Submitted**	**Date 04/04/2016**
HR	**Approved as to Form**	**Date**
FINANCE DEPARTMENT	**Approved as to Budget Requirements**	**Date** 4/14/16
TOWN MANAGER	**Approved Agenda Item for:** 4/18/16	**Date** 4/12/16

Reviewed

COMMISSION ACTION:

[ ] **Approved as Recommended** [ ] **Disapproved** [ ] **Tabled Indefinitely**

[ ] **Continued to Date Certain** [ ] **Approved with Modification**

All Traffic Solutions
Div of Intuitive Control Systems, LLC
3100 Research Drive
State College, PA 16801
Phone: 814-237-9005
Fax: 814-237-9006

Tax ID: 25-1887906

A sign of the future.™

QUOTE Q-21885

DATE/TIME: 3/28/2016 9:45:42 AM **PAGE NO: 1**

Questions contact:
MANUFACTURER:
All Traffic Solutions
David Shepherd
8142379005

Independent Sales Rep:

BILL TO:
Lady Lake Police Department
423 Fennell Blvd
Lady Lake, FL 32159

Attn: Chris McKinstry

SHIP TO:
Lady Lake Police Department
,

PAYMENT TERMS: Net 30 **CUSTOMER:** 209644 **CONTACT:** (352) 751-1585

ITEM NO:	DESCRIPTION:	QTY:	EACH:	EXT. PRICE:
4000741	SpeedAlert 18 Radar Message Sign (RMS); base unit w/ mounting bracket	1.00	$3,500.00	$3,500.00
4000692	90 DAY TRIAL of; Equip Mgmt, Reporting, Image Mgmt, Alerts, Mapping and/or PremierCare	1.00	$0.00	$0.00
4000693	90 day trial of Bluetooth, Traffic Data, Violator Alert, Linking (as applic)	1.00	$0.00	$0.00
4000641	Shipping	1.00	$0.00	$0.00
4000874	All Options Activation: Bluetooth, Traffic Data, Violator Alert, Pictures, ($3000 Value, requires Traffic or Message Suite)	1.00	$0.00	$0.00
4000793	Violator Strobe, Dual; Hardware for SpeedAlert 18, flash helps draw attention to the driver's speed. Requires color assignment PN.	1.00	$400.00	$400.00
4000826	Violator Strobe, Red and Blue for SpeedAlert 18, Requires 4000793 Dual Violator Strobe	1.00	$0.00	$0.00
4000744	LFP Power kit, 16Ah battery (2), internal power controller, charger w/connector	1.00	$735.00	$735.00
4000750	App, Mobile User Interface perpetual license (only 1 req'd per account)	1.00	$0.00	$0.00

Special Notes:

SALES AMOUNT:	$4,635.00
SHIPPING:	
TOTAL:	**$4,635.00**

Duration: This quote is good for 60 days from date of issue.
Shipping Notes: Unless shipping charges are specifically indicated, prices are FOB factory. Shipping charges may apply
Taxes: Taxes are not included in quote. Please provide a tax exempt certificate or sales tax will be applied.
Warranty: Unless otherwise indicated, all products have a one year warranty from date of sale. Warranty extensions are a component of some applications that are available at time of purchase. A Finance Charge of 1.5% per month will be applied to overdue balances. GSA GS-07F-6092R

ALL TRAFFIC
SOLUTIONS

Date:3/21/16
Chief Chris McKinstry
Lady Lake Police Dept.

Dear Chief McKinstry:

Re: Exclusively with All Traffic Solutions' products

The Shield™ radar speed display, SpeedAlert™ radar message sign and the instALERT® variable message sign are proprietary products solely engineered and manufactured by Intuitive Control Systems, LLC, the parent company of All Traffic Solutions. All Traffic Solutions products are manufactured within the United States using domestic labor and components.

Our unique product features include:

- Connectivity (standard): Only our radar speed and message displays include wireless communication capability as a standard feature maximizing reliability.
- Cloud-Synchronized (standard): No charge web access to our basic hosted service allows you to manage your traffic data in a consolidated database and synchronize your messages across authorized handheld devices.
- Web-based Apps (standard): Browser-based software interface automatically updates to the most current, feature-rich version at no charge.
- Mounting (standard): Our 12", 15" and 18" signs all utilize a standardized mounting configuration that allows the sign to be unlocked and removed in less than 10 seconds.
- Lightweight (standard): Our 12", 15", and 18" signs weigh 12, 18, and 29 lbs. respectively. The 24" signs weigh only 43 lbs. and fold in half for easy storage and transport.
- Extended battery life (standard): Internal Lithium-based batteries will add as little as 2.5 lbs. with one 12Ah) or 8 lbs. with two 16Ah batteries.
- SmartApps™ services (optional): Compliment our equipment to allow centralized, remote management of all sign functions and data including GPS mapping, remote diagnostics and alerts. Our patent-pending automated speed reports make data collection and analysis as simple as it can get.
- Perpetual Warranty: Standard warranty remains in effect as long as SmartApp services are active.

Your direct All Traffic Solutions representative, *David Shepherd* is available at *423-342-4301* or email *dshepherd@alltrafficsolutions.com.*

We appreciate your interest in All Traffic Solutions traffic safety solutions.

Sincerely,

David Shepherd
Regional Manager

ALL TRAFFIC SOLUTIONS

Product Specification
SpeedAlert 18 Radar Message Sign

SpeedAlert Radar Message Sign
- SpeedAlert 18 (SA18): 18" x 28" full matrix
  (SpeedAlert 24 (SA24) 24" x 60" full matrix also available – See separate SpeedAlert 24 Spec Sheet)
- Size and Weight without battery
  - 30" x 20 x 2.74" (without Your Speed sign), 29 lbs
- Full matrix display
- Universal mounting system: attach to pole, trailer or vehicle hitch mount
- Integral camera for awareness and alert triggered images: 640x480 pixel daylight images
- Internal K band radar with adjustable sensitivity
- Meets MUTCD Specifications

SpeedAlert Operation Modes
- Message Mode: Display one message, up to 3 screens
- All Messages: Sequence all messages in sign memory
- Speed Display: Display approaching vehicle's speed with "Your Speed" LED message
- Dependent Message: Display targeted messages based upon vehicle's speed
- Changeable speed limit sign
- Stealth or Display Off: Collect traffic speed and volume data with no LED display
- Schedule: Change message and/or mode up to 6 times/day
- Collect traffic data – vehicle volume by speed and time – in all modes
- Sign returns to last configuration when power applied

SpeedAlert Programming Methods
On-Board Programming (standard on all units)
- Select message from sign's memory
- Select operation mode
- Set Speed Limit

PC with Bluetooth or USB connection to sign: (PC control with USB connection standard with all signs)
- Create and change messages and settings
- Local data retrieval and management
- Local image retrieval and management from internal camera

ATS Mobile for Android devices, syncs with SmartApps
- Android OS wireless Bluetooth control local to unit
- Android device can be phone or WiFi device (must have Bluetooth)
- Manage all unit settings, automatic sync with SmartApps Web Based Management if subscribed
- All traffic data and messages automatically synced for online management and backup (included with ATS Mobile license)
  - Retrieve data and sync to SmartApps, generate reports online from hosted data
  - Create message and sync to SmartApps, then all messages available on all ATS Mobile devices

SmartApps Web-Based Management System using integral cell modem for remote management (See SmartApps specification for more information):

SpeedAlert 18

- Turnkey system. Remote sign connection functional upon ship. Unit connects to SmartApps system immediately when sign powered
- Fully hosted web-based management system
  - Internet connected computer with browser provides anywhere access.
  - No IT involvement or support necessary. System bypasses customer network eliminating access issues
  - Cellular provided by ATS, no separate cellular charges.
  - Hosted database requires no setup or maintenance by customer
- Apps – All apps included in Traffic Suite:
  - Equipment Management: Change messages and settings remotely, monitor sign online
  - Reporting: Online data retrieval and management, analysis and report generation
  - Image Management: Online image retrieval and management of images from internal camera
  - Alerts: Notifications for low battery and tampering, high speed and congestion, alerts can include images
  - Mapping: Visually manage equipment and data
  - Premier Care: Enhanced warranty and real-time monitoring

SpeedAlert Messages
- SA18: 1-2 line messages
  - 1 line: 10 1/4" H x 5.75" W characters, 4 per line
  - 2 lines: 7" H x 4" W characters, 6 per line
- Up to 3 screens per message
- Full graphics capability, each LED individually controllable
- Variable display time, flash and reverse rates for each screen
- Scroll through 25 user defined onboard messages using selector buttons built into sign, no training necessary
- Ability to sequence messages for up to 72 screen animation
- Message power efficiency calculator in software
- Unlimited message storage on PC, ATS Mobile or SmartApps
- Messages on sign do not get erased when power removed
- Sign returns to last message when power applied
- Actual sign preview in ATS Mobile and SmartApps
- Collect traffic data in all operational modes

SpeedAlert Programming
Configure the following parameters via ATS Mobile, PC or SmartApps Web-Based Management System:
- Messages

©2012 All Traffic Solutions. Property of All Traffic Solutions.

- Create and load message using "Display Now" feature
- Load 24 messages into sign's memory
- Scroll messages in sign's memory
- Display signs stored on SmartApps or ATS Mobile

- Speeds
  - Speed limit
  - Maximum speed displayed
  - Display on/off/specific mph activation
  - Radar sensitivity (range)
  - Speed limit sign operation: Change speed limit up to six times per day
  - Metric hundreds display capable
- Set time via PC or sync with cell signal
- Sign firmware field and remotely upgradeable

Speed Dependent Message System

- Different messages for each of 5 speed ranges
  - No cars
  - Cars <= speed limit
  - Cars > Speed Limit, < x
  - Cars > x < upper speed
  - Cars > upper speed
- Ranges dependent on speed limit setting only, so no message programming changes required with speed limit change to shift dependent message ranges.
- Independent Maximum Speed Displayed setting
- Speed Dependent Messages can be any SA24 messages, including
  - "YOUR SPEED" screen with 18" speed display digits
  - "SPEED LIMIT" screen with 18" speed limit display digits

Scheduling

- All days, multiple messages: schedule up to 6 different messages or modes for up to 6 different time periods in a 24 hour day, repeats in each 24 hour cycle
- 7 day, multiple messages: schedule up to 6 different messages or modes for up to 6 different time periods in a 24 hour day for each of 7 days, repeats in each 7 day cycle; up to 25 different messages can be used over the 7 day period
- All messages and scheduling reside on the sign – no external hardware necessary
- Schedules can be saved on ATS Mobile for loading on multiple signs
- Program schedule via SmartApps, ATS Mobile or PC
- Camera activation available in schedule options
- Internal real time clock, time and schedule maintained with power disconnected

SpeedAlert Data Logging Option

- Traffic data reporting using SmartApps Online Reporting App,
- Collect data with SmartApps automatic service or Local collection with ATS Mobile or PC
- Reports include tables and charts to address all constituents with the most applicable data presentation
- All reports exportable to excel, csv and pdf
- Automatic Data Collection - SmartApps
  - Data retrieval at least 8 times per day – near real time reporting, memory never full
  - All data in one database, available for analysis including compliance comparisons by location
  - Access reports from interactive map view by location

  Reports:
  - Summary page with average and 85th percentile speed, average daily volume, 10 MPH pace speed, high and low speed, display mode
  - Traffic counts by speed range, full day and time of day over selected date range with 5 MPH resolution
  - Vehicle counts by time range per day by hour
  - Vehicle counts by speed range and time of day
  - Compliance by speed range with 3 ranges
  - Enforcement report showing highest speed and volume violators over selected locations where data collected
- Local Data Collection – ATS Mobile or PC
  - All data collected with ATS Mobile hosted in online database for anywhere access
  - Download traffic data from sign with ATS Mobile or PC with USB or Bluetooth connection
  - 30 days of high volume data minimum, Data collection rolls over when memory reaches capacity

  Reports:
  - Summary page with average and 85th percentile speed, average daily volume, 10 MPH pace speed, high and low speed, display mode
  - Traffic counts by speed range and time of day over selected date range with 5 MPH resolution
  - Vehicle counts by time range per day by hour
  - Traffic counts by speed range and time of day

Construction

- "YOUR SPEED" sign
  - High intensity prismatic reflective background
  - 24" x 8"
  - 3.5" high MUTCD 'C' letters
- LED pixels: Amber 595nm, 30 degree viewing angle, 100,000 hrs, black background, (MUTCD compliant)
- LED Density: 0.6"x1" pitch, 18 x 48 pixel matrix
- Radar: K Band (24.15 GHz), FCC Certified, no license req'd, +-1mph accuracy, 12 degree square pickup area, range: 2000+ ft., 5-105mph (8-150 kph)
- Conformal coating on all circuit boards
- Integral handle
- Weatherproof, NEMA 4, IP65 sealed
- ¼" Tinted, non-glare, UV stabilized polycarbonate face
- Drip proof, vented battery compartments (2)
- Aluminum chassis, 14 ga, white powder coat finish, black powder coat front for maximum contrast for digit visibility
- Tamper resistant mounting hardware system, hardware secured behind enclosure lock
- -40 to 160 F operating temperature range, 95% humidity non-condensing (-20F for Bluetooth communication, 5F for internal camera)

SpeedAlert Power

- Power Input, Max:
  - 12 VDC, 3 A max, 36 W max
- Power saving circuitry and automatic dimming for ambient light conditions with adjustable dimming range and manual display brightness override
- SpeedAlert 18 Power Options:

©2012 All Traffic Solutions. Property of All Traffic Solutions.

ALL TRAFFIC SOLUTIONS

Product Specification
SpeedAlert 18 Radar Message Sign

- 16Ah Li-Ion Battery with built-in short circuit and reverse polarity protection circuitry; 1.5A 12.8 VDC output, 120VAC input automatic charger; Capacity for up to 2 batteries in unit for extended portable use
- Solar panel assist: 40W or 60W solar panel and bracket, Solar controller panel w/ 26Ah lead acid battery; 6A 120VAC automatic charger optional
- 100-220VAC AC power supply (6A 12VDC) in external NEMA 4 enclosure
- ATS 5 Trailer (batteries with optional solar assist: 235 or 470 Ah, 60W solar option)

• Display battery level indicator on sign, ATS Mobile or Web
• Low battery indicator on sign, auto recovery with solar

Standard SpeedAlert System Components
• SpeedAlert Radar Message Display SA18
• Tamper resistant mounting plate and hardware
• Key
• Web based programming software for PC control with USB cable

Optional SpeedAlert Components and Features
• SmartApps Web-Based Remote Management System
• Padded carrying case
• Extra mounting brackets
• Relay closure
  - 7A, 30VDC or 7A 120VAC max, 100mA 5VDC min, no power supplied, simply a contact closure
  - Trigger relay at specified speed with configurable duration from 1to 10 seconds per radar event
• Bullet resistant face
• Tamper alarm – ATS-5 trailer

SpeedAlert Mounting Options
• Pole mount standard with included bracket, hardware
  - NCHRP 350 approved on 4" pole (Letter SS-135)
• ATS-5 Trailer (refer to ATS 5 specifications for more info)
• Vehicle Hitch mount
  - Mounts sign 30" to bottom of sign from receiver tube (final height dependent on receiver height)
  - Fits 1 ¼" or 2" receiver, adapter included,½" hitch pin
  - Locking rotation adjustment on 15 degree increments over 180 degrees, +/- 5 degrees tilt
  - White powder coat finish with rear reflector
• Standard Folding Portable Post
  - Folds for easy storage and portability
  - iA18: 60" to 73" to bottom, 80" to 93" to top of sign depending on leg positions
• Mounting provisions for permanent applications with ¼-20 threaded holes

Warranty
• 1 year warranty (3 months on Li-Ion batteries)
• Premier Care SmartApp
  - Warranty service fully covered
  - Product software upgrades free
  - Vandalism and accidental damage (non-warranty) at 50% off list price

Made in the United States of America

SpeedAlert 18 Pole Mount

SpeedAlert 18 on ATS-5 Trailer

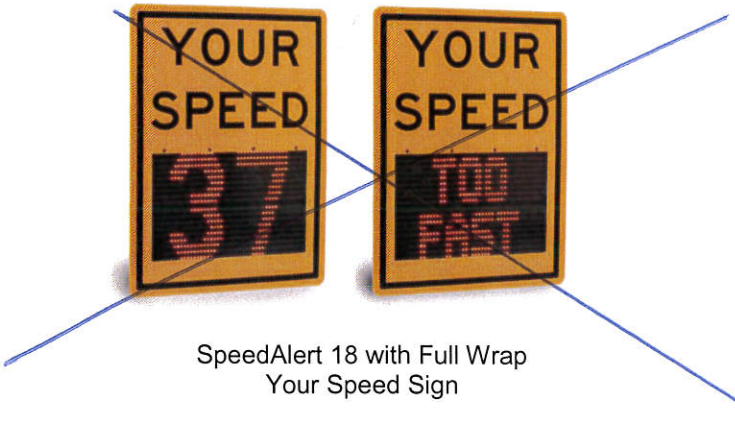

SpeedAlert 18 with Full Wrap
Your Speed Sign

©2012 All Traffic Solutions. Property of All Traffic Solutions.

ALL TRAFFIC SOLUTIONS

Product Specification
SpeedAlert 18 Radar Message Sign

SpeedAlert 18 Dimensions

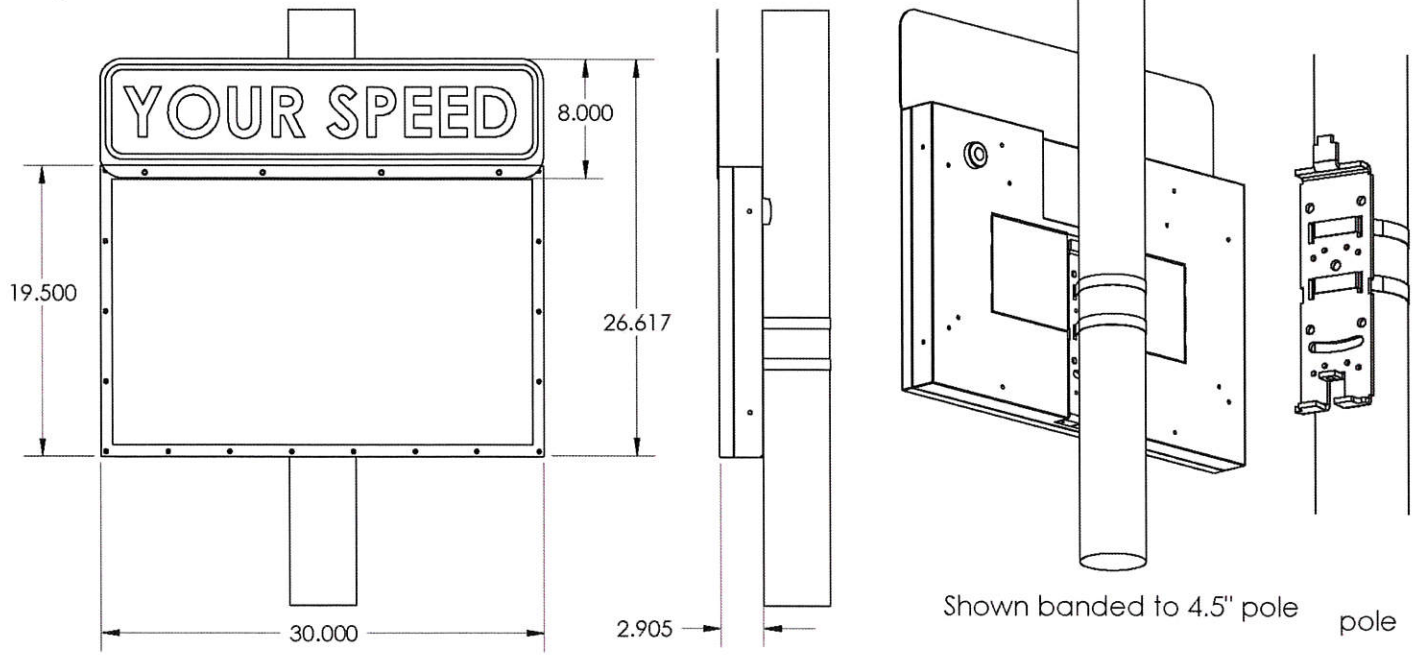

SpeedAlert 18 Mounting Bracket and Mounting Holes

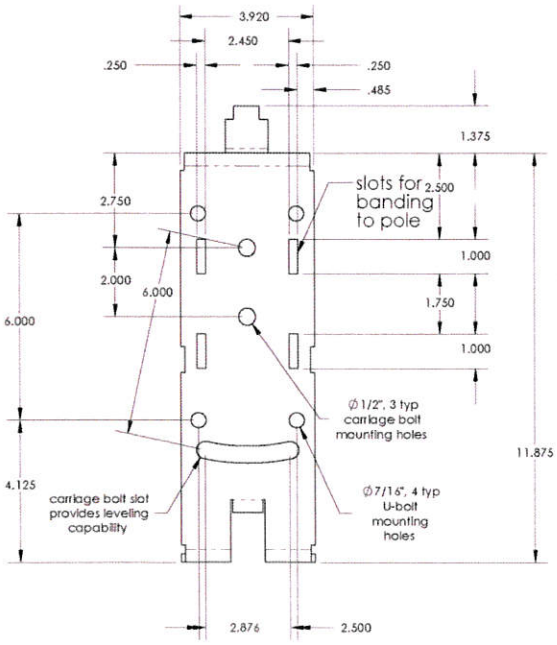

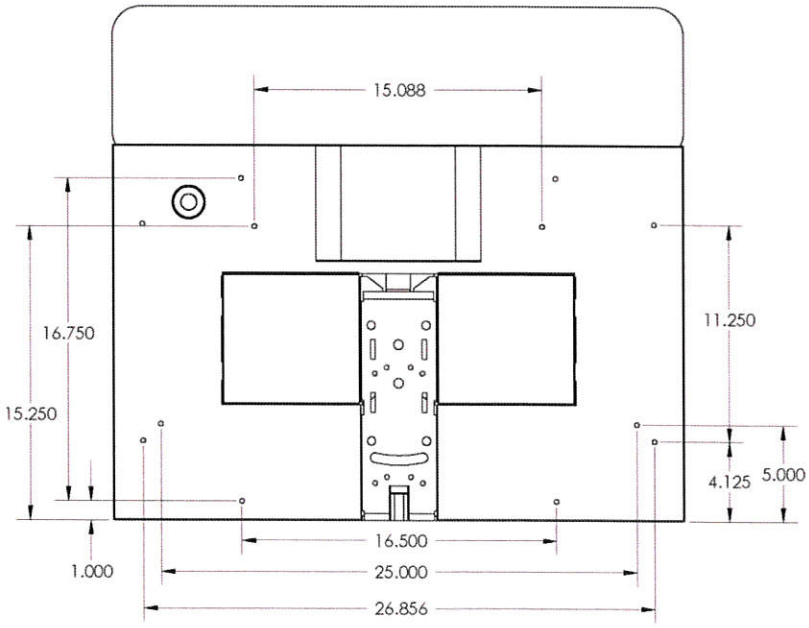

Additional Mounting Provisions:
1/4-20 thread, captive nuts

©2012 All Traffic Solutions. Property of All Traffic Solutions.
Specifications subject to change without notice.

ALL TRAFFIC SOLUTIONS

Product Specification
SpeedAlert 18 Radar Message Sign

SpeedAlert 18 with trailer mounting brackets installed –
For installation on existing trailers for Trade In

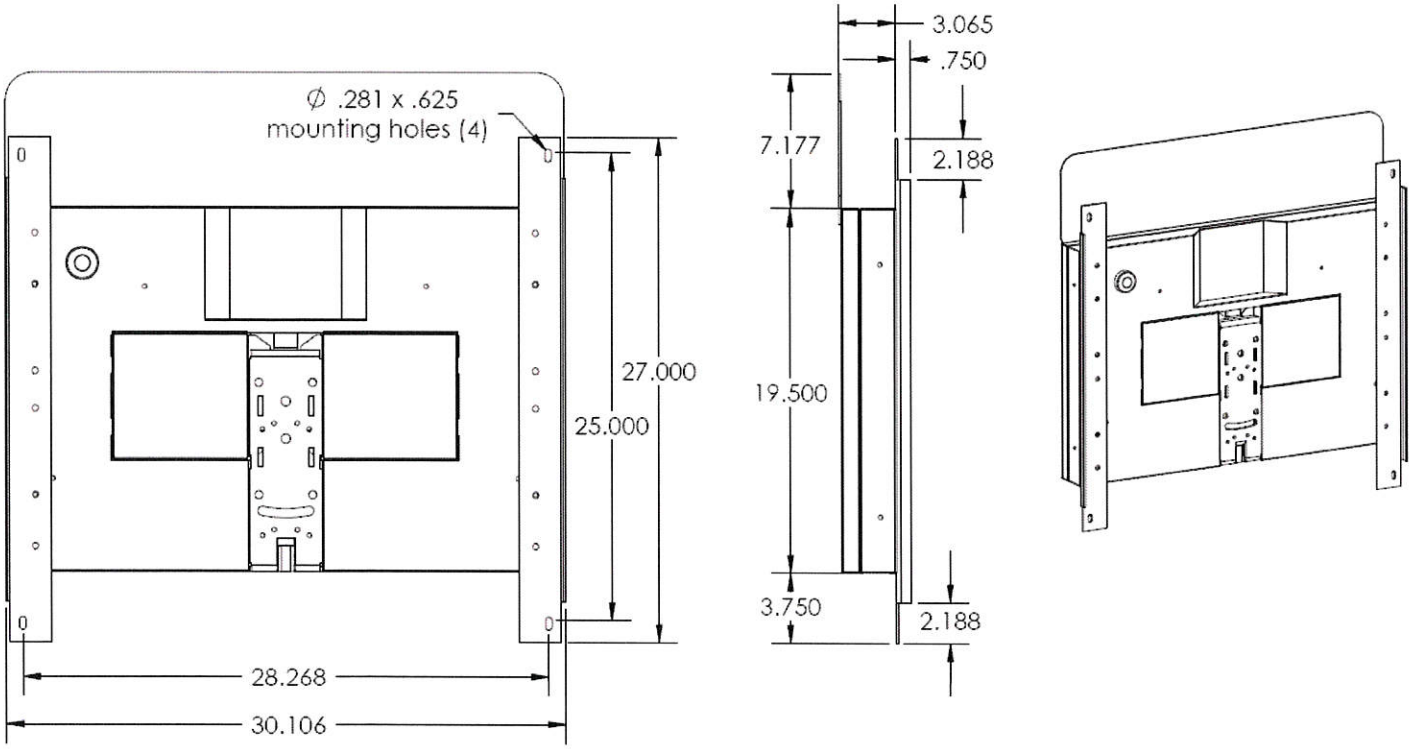

©2012 All Traffic Solutions. Property of All Traffic Solutions.

SafePace® 700 Variable Messaging Sign

The new Traffic Logix® SafePace® 700 variable messaging sign offers variable messaging with extra large 18" LED digits.

The SafePace 700 variable messaging sign allows you to display the message of your choice while displaying vehicle speeds in bright, large digits that can be seen even from a distance. With fully customizable text and graphics, the SafePace 700 is ideal for a variety of road conditions and situations, helping to make your streets safer one sign at a time. SP700, a durable and versatile sign with high visual impact to greatly assist with Traffic calming and driver awareness.

Choice of faceplate colors available

700 Specifications

Digit Size	18"
Weight	55 lbs
HIP Faceplate - Full Size	42.5" x 31"
Radar Detection	Up to 1200'
Power - AC - Solar (140W plus batteries)	
NEMA 4X-12 IP65 Cabinet	Weatherproof
Bluetooth Communication	Included
Sign Mounting Straps	Included
Individual LED lens shields	Included
Trailer Compatible	
Data Collection Compatible	
Web Director - Cloud Compatible	

Warranty - 2 Years

Features

MUTCD compliant full matrix radar sign with two rows of customizable text and 18" digits

Message displayed can be determined by driver speed

Allows for **animated text or graphics** such as moving arrows or a scrolling message

Unique light enhancing, anti glare lens system provides **brilliant visibility** even in poor lighting

Includes programmable **integrated flashing speed violator strobes** to alert speeding drivers

Ultra **low power consumption** including the most power-efficient radar technology available and optional solar power

Superior construction and durability for long-lasting performance

High strength aluminum sign face and individual **optical lenses to protect against vandalism or theft**

Stealth Mode allows the sign to collect baseline traffic data while speed display appears blank to motorists

Chris McKinstry

From: Karen Hentemann <khentemann@trafficalm.com>
Sent: Monday, April 04, 2016 5:34 PM
To: Chris McKinstry
Subject: RE: 18" Driver Feedback Sign Inquiry
Attachments: 4 page DFB Brochure.pdf; TC Mini Brochure.pdf

Good Afternoon Chief:

Yes you are correct, our 18" sign is definitely not portable. The sizes of signs we manufacture are 9", 12", 14" , 15" and 18". All our Smart Signs have the same features with the exception of our 15" Smart Sign. It qualifies as a Smart Sign because it has traffic data collection and is Bluetooth programmable. However it does not offer the additional message programming. It does, however, offer both red and amber numerical display which none of our other signs offer.

Our 9" and 12" Smart Signs are the only signs that we consider "portable" as they are battery powered. The 9" Smart Sign accommodates speeds up to 25MPH and the 12" Smart Sign accommodates speeds up to 35MPH. Our 14" and 15" signs are designed for roadway speeds up to 50MPH.
These little signs are really handy for portability as they come with one mounting bracket and we recommend that additional mounting brackets are purchased and placed at every location where the sign could potentially be used. Then our simple 2-bolt mounting system allows you to quickly unbolt, slide off the existing bracket, take to the new location, slide over the new bracket and re-bolt. These signs will typically operate for 5-7 days before it is necessary to bring them in and charge them up overnight before re-deploying. You cannot field exchange the batteries on our signs as we have designed them such that the mounting bracket covers the access plate to deter possible vandalism.

Otherwise, all the sizes referenced above are available with Solar Kits as well. Keep in mind that the addition of a solar kit makes it much less portable because you now need to disconnect the panel, the wiring and the sign itself. All of the above signs are also available with our TC Mini Display Trailer. We also have a commercial industrial dolly that either our 9" or 12" signs can be mounted to as well.

I have attached our Driver Feedback Sign brochure for your reference. After you have reviewed and understand the speeds each of the signs are designed to accommodate, let me know which size best suits your application and I will get you pricing.

Karen Hentemann
National Sales Manager
TRAFFICALM SYSTEMS
Office: 208-262-8003
Mobile: 208-691-0102
www.traffiCalm.com

From: Chris McKinstry [mailto:cmckinstry@ladylake.org]
Sent: Thursday, March 31, 2016 7:17 AM
To: Karen Hentemann
Subject: RE: 18" Driver Feedback Sign Inquiry

Good Morning,
I was looking for a portable model with all of the below features. Fifty pounds is a little heavy to hoist up onto sign posts. Do you have a lighter version with the same features?

Thank you,

LADY LAKE POLICE DEPARTMENT
Chief Chris McKinstry
Chief of Police
423 Fennell Blvd.
Lady Lake, FL 32159
(352) 751-1567

FSS 668.6076 – "Under Florida law, e-mail addresses are public records. If you do not want your e-mail address released in response to a public records request, do not send electronic mail to this entity. Instead, contact this office by phone or in writing."

Town Hall hours of operation: Monday – Thursday, 7:30 am – 6:00pm

From: Karen Hentemann [mailto:khentemann@trafficalm.com]
Sent: Wednesday, March 30, 2016 11:42 PM
To: Chris McKinstry <cmckinstry@ladylake.org>
Subject: 18" Driver Feedback Sign Inquiry

Hello Chris:

Thank you for your inquiry regarding our 18" Driver Feedback Smart Sign. This sign has the following features:

- Full Matrix meaning not only does it display numerical speeds but can be programmed for additional messages such as Slow Down or Too Fast. Can also be programmed for emoticons such as a smiley face when a driver is within the posted speed and a frowning face if a driver exceeds the posted speed
- Highway Gothic Fonts
- Bluetooth equipped and works with TraffiCalm's PC SafetyCalm software allowing you to program from your laptop or you can download our free Android App which allows you to program the sign from your phone or tablet
- Provides traffic data recording and a full suite of data analysis tools
- Almost unlimited program schedules
- Expandable for beacons, cameras and who knows what else in the future
- Firmware is upgradable and is never charged for to the original owner of the sign
- Does require the purchase of either an AC Power Supply or a Solar Kit

You've indicated you want it to operate on batteries. We recommend that you purchase our 140 Watt Solar Kit which includes a 140 Watt Solar Panel, 140 Ah Battery, Battery Box, and all Wiring /Conduit. The solar panel will keep the battery charged ensuring 24/7, 365 days a year of sign autonomy.
Pricing follows:

18" Smart Sign - $3950.00/Each
140 Watt Solar Kit - $2375.00/Each

Prices are FOB: Post Falls, Idaho
Lead Time: 5 Business Days After Receipt of Order

Certainly should you have further questions, don't hesitate to contact me.
Again, thank you for your interest in TraffiCalm!

L-7

TOWN COMMISSION AGENDA ITEM

REQUESTED COMMISSION MEETING DATE: April 18, 2016

SUBJECT: Discussion of Advertising in the Special Conference Issue of "Quality Cities" for the 2016 Florida League of Cities Conference.

DEPARTMENT: Town Manager

STAFF RECOMMENDED MOTION: Direction only at this time.

SUMMARY: Florida League of Cities has sent out information announcing the 90th Annual Conference which will be held in the City of Hollywood on August 18-20th. For the annual conference, they prepare a special conference issue of "Quality Cities" and the municipalities can purchase an ad for this special issue. I have attached examples of previous ads from different cities along with the cost information. If the Commission is interested in purchasing an ad, staff will prepare one for the Commission's review.

FISCAL IMPACT: To be determined ($0 up to $625.00)

[ ] Capital Budget
[ ] Operating
[X] Other–Contingency Bal $61,921

ATTACHMENTS: [ ] Ordinance [ ] Resolution [ ] Budget Resolution
[ ] Other
[X] Support Documents-

DEPARTMENT HEAD	**Submitted**	**Date**
HR	**Approved as to Form**	**Date**
FINANCE DEPARTMENT	**Approved as to Budget Requirements**	**Date**
TOWN MANAGER	**Approved Agenda Item for:** 4-18-16	**Date** 4-12-16

COMMISSION ACTION:

[ ] Approved as Recommended **[ ] Disapproved** **[ ] Tabled Indefinitely**

[ ] Continued to Date Certain **[ ] Approved with Modification**

MEMORANDUM

Received
APR 11 2016
Town of Lady Lake
Town Manager's Office

TO: Key Officials
Local/Regional Leagues

FROM: Stewart Nelson, Graphics Designer SN

DATE: April 11, 2016

SUBJECT: Advertising in Conference Issue of *Quality Cities*

We are pleased to announce that the 90th Annual Conference of the Florida League of Cities will be held August 18-20, 2016, at the Diplomat Resort & Spa in Hollywood, Florida. As in previous years, we are extending to all Florida cities and local/regional leagues an invitation to advertise in the special conference issue of *Quality Cities.* This offers an excellent opportunity to extend best wishes for a successful conference to our host, the City of Hollywood. The deadline for advertising space reservations and advertising copy is Friday, June 17, 2016.

All ads may be in color. This is a great opportunity for you to update your ad with eye-catching color graphics and photos. Please feel free to contact me to help with suggestions.

We have enclosed a form (see other side) that must be signed and returned for ad placement. The form includes ad sizes and costs. If your city advertised last year, a copy of your ad is enclosed. You can use it in developing this year's ad. If you did not advertise last year, a sample ad is enclosed.

To make your ad more attractive, we encourage you to include artwork such as your city's logo in color or a color photograph. To ensure the highest quality reproduction of your ad, please call me at (850) 701-3663 if you have questions concerning our magazine production requirements or email me at *snelson@flcities.com.* You may expedite your reservation by faxing the form to (850) 222-3806 or mail the original agreement to my attention.

We look forward to your continued cooperation and support in our efforts to make this conference the best ever.

Enclosures

(Over)

301 South Bronough Street • Suite 300 • P.O. Box 1757 • Tallahassee, FL 32302-1757 • (850) 222-9684 • Fax (850) 222-3806 • www.floridaleagueofcities.com

1 Page Ad 4-color - $625.00
7-1/4"w X 9-1/4"h

NOTE:

Please ensure that your ad conforms to the sample sizes shown in this document.

Ads built in Word or Publisher are accepted and will be converted to a press-quality PDF if possible. If problems occur in the creation of the PDF, we will have to rebuild your ad in a different program for use in the magazine. Therefore, we cannot guarantee an exact font match.

Accepted ad formats are PDF (preferred), TIFF, EPS, and JPEG (use "Maximum" quality setting). Do not use low-resolution photos (72ppi - Web quality) or low-resolution graphics (such as your city logo from your Website) in your ad. All ads created in Photoshop must be flattened files, no active layers please. Fonts in EPS files must be converted to outline and have embedded links or you may use the "Package" feature in Illustrator to collect all fonts and images in one folder for our use. Artwork should be 300ppi.

If you send your ad in PDF format, please set the conversion preferences for "Press quality" with all fonts embedded. Be sure to print out and review your PDF document after you have created it to ensure that it is the same as your original. If you have any questions about how to do this in Word or Publisher, please contact me for assistance.

Any questions or suggestions for converting your black and white ad to color? Please email Stewart Nelson at *snelson@flcities.com* or call (850) 701-3663.

PLEASE SEE OTHER SIDE FOR SMALLER AD SIZES.

1/2 Page Ad 4-color - $400.00
7-1/4"w X 4-1/2"h

1/4 Page Ad 4-color - $250.00
4-1/2"w X 4-1/2"h

1/8 Page Ad
4-color -
$150.00
2-1/2"w X 4-1/2"h

2010 done

The Town of Pembroke Park

Extends Best Wishes to the
City of Hollywood and the
Florida League of Cities
for a successful
84th Annual Conference

Pembroke Park

Mayor Emma Shoaff
Vice Mayor Ashira Mohammed
Clerk Commissioner Gina Cohen
Commissioner Howard P. Clark, Jr.
Commissioner Annette Wexler
Town Manager Dr. Robert A. Levy

2010 done

The Town of Ocean Ridge
Congratulates the
Florida League of Cities
on its 84th Annual Conference

TOWN OF OCEAN RIDGE · 1931 · FLORIDA

Mayor
Kenneth Kaleel

Vice Mayor
Lynn Allison

Town Manager
Kenneth N. Schenck

Commissioners
Terry Brown
Betty Bingham
Geoffrey Pugh

Town Clerk
Karen Hancsak

2010 done

The City of

Fort Walton Beach

extends congratulations and best wishes to the Florida League of Cities and our host, the City of Hollywood, for a successful 84th Annual Conference.

Mayor Mike Anderson
Council Member Mike Holmes, Mayor Pro Tem
Council Member joyce gillie gossom
Council Member Dennis Reeves
Council Member Mike Minich
Council Member Bobby Nabors
Council Member Bill Patterson
Council Member Dick Rynearson

Robert T. Mearns, City Manager
Helen Spencer, City Clerk
Toni Craig, City Attorney

Fort Walton Beach...A City of Excellence

THE CITY OF LIVE OAK
The Caring Community

Extends best wishes for a successful
84th Annual Conference
Florida League of Cities

John W. Yulee
Councilman

Adam Prins
Councilman

Ed Rewis
Councilman

Bennie Thomas
Councilman

David Burch
Councilman

Garth R. Nobles Jr.
Mayor

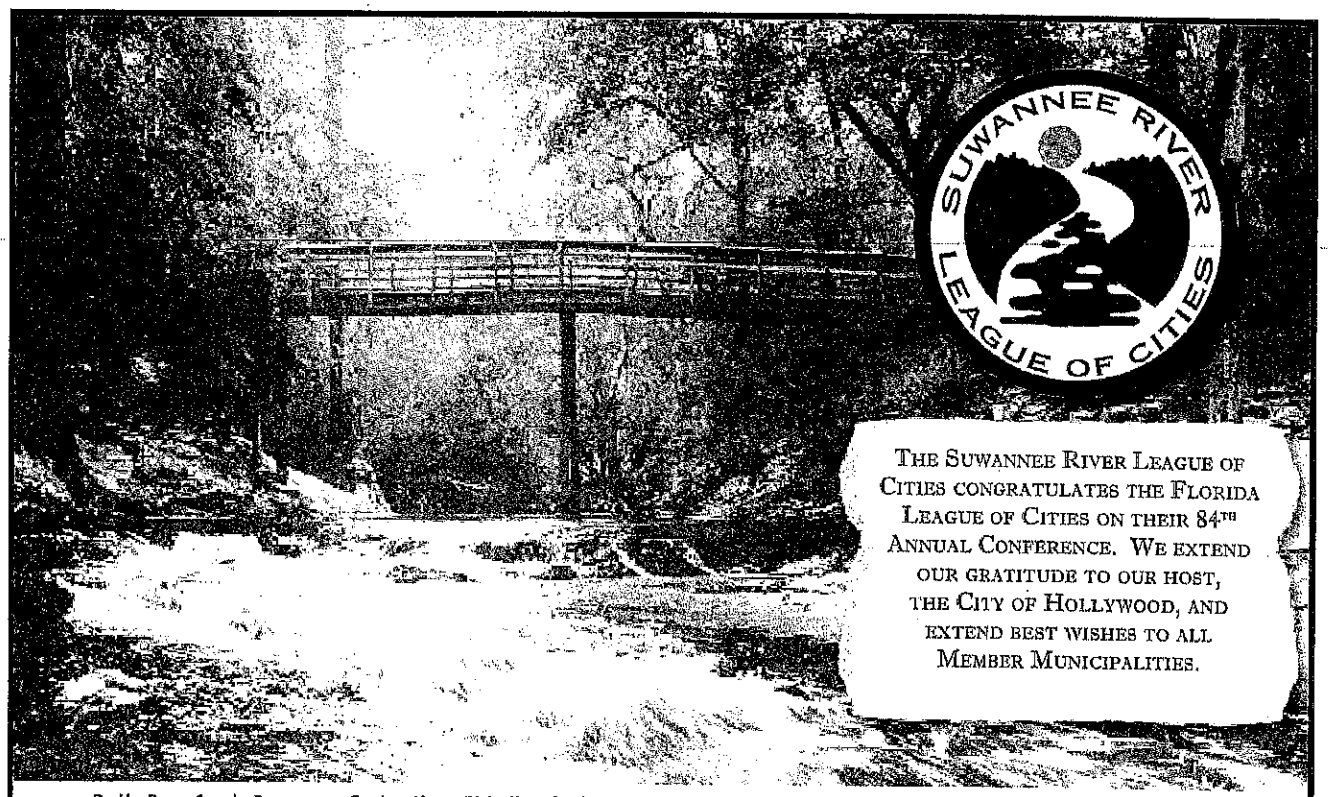

THE SUWANNEE RIVER LEAGUE OF CITIES CONGRATULATES THE FLORIDA LEAGUE OF CITIES ON THEIR 84TH ANNUAL CONFERENCE. WE EXTEND OUR GRATITUDE TO OUR HOST, THE CITY OF HOLLYWOOD, AND EXTEND BEST WISHES TO ALL MEMBER MUNICIPALITIES.

Bell, Branford, Bronson, Cedar Key, Chiefland, Cross City, Fanning Springs, Fort White, Greenville, Inglis, Jasper, Jennings, Lake Butler, Lake City , Lee, Live Oak, Madison, Mayo, Otter Creek, Trenton, White Springs, Williston

N-8

TOWN COMMISSION AGENDA ITEM

REQUESTED COMMISSION MEETING DATE: April 18, 2016

SUBJECT: Consideration of Extension of Terms for Two Members of the Police Pension Board

DEPARTMENT: Clerk's Office

STAFF RECOMMENDED MOTION: Approve the extension of terms of two members of the Police Pension Board, Peter Chiasson and John Schmied, until the end of June, 2016.

SUMMARY: The terms of two current Police Pension Board members expire this month, Pete Chiasson and John Schmied. One member has requested that the consideration of appointments/reappointments be extended until after the June 2016 Police Pension Board meeting is held.

FISCAL IMPACT: N/A

[ ] Capital Budget
[ ] Operating
[ ] Other

ATTACHMENTS: [ ] Ordinance [ ] Resolution [ ] Budget Resolution

[ ] Other [ ] Support Documents

DEPARTMENT HEAD KL	**Submitted**	**Date**
HR	**Approved as to form**	**Date**
FINANCE DEPARTMENT	**Approved as to Budget Requirements**	**Date**
TOWN MANAGER K	**Approved Agenda Item for:** 4-18-16	**Date** 4-12-16

COMMISSION ACTION:

[ ] Approved as Recommended **[ ] Disapproved** **[ ] Tabled Indefinitely**

[ ] Continued to Date Certain **[ ] Approved with Modification**

N-9

There Is No

Packet Item

For Item N-9.