REGULAR MEETING OF THE LADY LAKE TOWN COMMISSION

DATE:	**Monday, March 2, 2015**
TIME:	**6:00 p.m.**
PLACE:	**Town Hall Commission Chambers** **409 Fennell Blvd., Lady Lake, Florida**

ALL INTERESTED PERSONS ARE CORDIALLY INVITED TO ATTEND THIS PUBLIC MEETING

AGENDA*

A. CALL TO ORDER: Mayor Ruth Kussard

B. PROCEDURAL: *Citizens are encouraged to participate in the Town of Lady Lake meetings. Speakers will be limited to three (3) minutes. Additional time may be granted by the Mayor. Citizen groups are asked to name a spokesperson and the Mayor, at his/her discretion, may allow longer than three minutes. Upon being recognized by the Mayor, please approach the dais, state your name and address, and speak into the microphone. The order of agenda items may be changed if deemed appropriate by the Town Commission. Please be respectful of others and put your cell phone on silent mode.*

C. PLEDGE OF ALLEGIANCE: Mayor Ruth Kussard

D. INVOCATION[1]: Rev. Daniel Burgess, Lady Lake Wesleyan Methodist Church

E. ROLL CALL

F. PUBLIC COMMENTS[2]

G. PROCLAMATION:

1. Proclaiming the Month of March 2015 as Irish American Heritage Month (Mayor Ruth Kussard/Pat Kennedy of the Villages Hibernians)

H. ANNOUNCEMENTS:

2. Lt. Rob Tempesta – Graduation from the Southern Police Institute (Chris McKinstry)

3. Chief Chris McKinstry – Graduation from the Florida Police Chiefs Association STARS Program 2015 New Chiefs Seminar (Kris Kollgaard)

I. CONSENT[3]:

4. Minutes – February 18, 2015 – Special Commission (Conceptual) Meeting
– February 18, 2015 – Commission Meeting (Special)

5. Consideration to Authorize the Town Manager to Submit the Revised Wastewater Treatment Plant Reservation and Bulk Treatment Agreement to the City of Fruitland Park for Review and Consideration (C.T. Eagle)

J. OLD BUSINESS:

K. NEW BUSINESS:

6. Consideration of Approval for the Citizen's First Bank Drive-Through Facility Major Site Plan Re-Application – MJSP 01/15-004 – A Development Consisting of a 330 Sq. Ft. Financial Institution Building with the Provision of a Two-Lane Service Drive-Through Facility – Located at 1105 Caballero Court (within The Villages Downtown Center in Spanish Springs) (Thad Carroll)

7. Consideration of Approval for the Village Veranda at Lady Lake Major Site Plan – MJSP 10/14-002 – A Facility Proposed to be Developed in Three Phases Including Three Outparcels with a total of 22,000 Sq. Ft. of Commercial Space and a Proposed Multi-Story Building with 90 Assisted Living Units and 40 Memory Care Facility Units – Located at South Hwy 27/441, North of the Too Your Health Spa (V) Project (Thad Carroll)

8. Consideration of Approval the for Lady Lake Crossing & Outparcel Major Site Plan – MJSP 01/15-003 – A Development Proposing 52,000 Sq. Ft. of New Retail Building Space and a 4,000 Sq. Ft. Building Development – Located on the Outparcel Between Tire Kingdom and McDonald's at the SW Corner of US Hwy 27/441 & Fennell Blvd. (Thad Carroll)

9. Consideration of the Lady Lake Police Department Hosting the "Spring into Safety" Community Fair in Partnership with the Home Depot on April 18, 2015 (Chris McKinstry)

L. TOWN ATTORNEY'S REPORT:

10. Ordinance No. 2015-01 – First Reading – Rolling Acres Self Storage Facility (Tree Tops Golf, Inc.) – Located at the Corner of West Lady Lake Blvd. and Rolling Acres Road at 175 S. Rolling Acres Road – Providing for a Modification of the Town of Lady Lake Planned Commercial (CP) Zoning Memorandum of Agreement (Thad Carroll)

11. Ordinance No. 2015-03 – First Reading – Amending Chapter 13 of the Town of Lady Lake Code of Ordinances Entitled Special Assessments, Impact Fees, Supplemental Fees, Section 13-21 – Regarding Increasing the Supplemental Education Impact Fees to 75% of the Rate Differential of the Full Impact Fee Amount (Thad Carroll)

M. TOWN MANAGER'S REPORT:

12. Consideration of One Appointment/Reappointment to the Parks, Recreation, & Tree Advisory Committee (Kris Kollgaard)

N. MAYOR/COMMISSIONER'S REPORT:

O. PUBLIC COMMENTS[4]

P. ADJOURN

***Back up for agenda items is available on the Town's website at www.ladylake.org or contact the Town Clerk at (352) 751-1571.**

This public hearing is being conducted in a handicapped accessible location. Any handicapped person requiring an interpreter for the hearing impaired or the visually impaired should contact the Clerk's Office at least two (2) days prior to the meeting and an interpreter will be provided. To access a Telecommunication Device for Deaf Persons (TDD), please call (352) 751-1565. Any handicapped person requiring special accommodations at this meeting should contact the Clerk's Office at least two (2) days prior to the meeting.

Advice to the Public: If a person decides to appeal a decision made with respect to any matter considered at the above meeting or hearing, he may need a verbatim record of the proceedings including the testimony and evidence, a record of which is not provided by the Town of Lady Lake. (F.S. 286-0105)

Please be advised that one or more members of any other Town Board or Committee may be in attendance of this meeting.

NS/Word/Town Clerk/Agendas - Commission Meeting – 03-02-2015

---

[1] *Any invocation that may be offered before the official start of the Commission meeting shall be the voluntary offering of a private citizen, to and for the benefit of the Commission. The views or beliefs expressed by the invocation speaker have not been previously reviewed or approved by the Commission, and the Commission is not allowed by law to endorse the religious beliefs or views of this, or any other speaker.*

[2] *This section is reserved for members of the public to bring up matters of concern or comments. It is not limited to items on the agenda and it is open to any concern or comments that the public may have.*

[3] *All items listed under consent are considered routine by the Town Commission and will be enacted by one motion. There will be no separate discussion of these items unless a Town Commissioner so requests, in which event the item will be removed from the consent agenda and considered in its normal sequence.*

[4] *This section is reserved for members of the public to bring up matters of concern or comments. It is not limited to items on the agenda and it is open to any concern or comments that the public may have.*

G-1

Proclamation

WHEREAS, by 1776, nearly 300,000 Irish Nationals had emigrated to the American colonies and played a crucial role in America's War for Independence; and

WHEREAS, following the victory at Yorktown, a French Major General reported that Congress owed its existence and America its preservation to the fidelity of the Irish serving the Continental Army; and

WHEREAS, five signers of the Declaration of Independence were of Irish descent, three signers were Irish born; and

WHEREAS, Irish Americans helped to fashion a system of government for our young Nation; and;

WHEREAS, Irish Americans, since America's inception, have provided and continue to provide leadership and service to this nation's political, business and religious establishments; and

WHEREAS, twenty two Presidents have proudly proclaimed their Irish American heritage; and

WHEREAS, Irish born Commodore John Barry was recognized by the United States Congress in September of 2002 as the "First Flag Officer of the United States Navy"; and

WHEREAS, it is fitting and proper to celebrate the rich cultural heritage and the many valuable contributions of Irish Americans.

NOW, THEREFORE, I, Ruth Kussard, Mayor of the Town of Lady Lake, Florida, in recognition of the long history of Irish American contributions to the State of Florida do hereby proclaim the month of **March 2015** as:

"Irish American Heritage Month"

IN WITNESS WHEREOF, I have hereunto set my hand and caused the Official Seal of the Town of Lady Lake to be affixed this 2nd day of March, 2015.

Ruth Kussard

Ruth Kussard, Mayor

Attest: Kristen Kollgaard

Kristen Kollgaard, Town Clerk

Certificate of Achievement

PRESENTED TO:

Lt. Robert Tempesta

FOR SUCCESSFULLY GRADUATING FROM THE

SOUTHERN POLICE INSTITUTE

KRIS KOLLGAARD – TOWN MANAGER

MARCH 2, 2015

DATE

#5

Certificate of Achievement

PRESENTED TO:

Chief Chris McKinstry

FOR SUCCESSFULLY GRADUATING FROM THE

FLORIDA POLICE CHIEFS ASSOCIATION STARS PROGRAM 2015

KRIS KOLLGAARD – TOWN MANAGER

DATE

MARCH 2, 2015

#3

I-4

MINUTES OF THE SPECIAL MEETING
OF THE LADY LAKE TOWN COMMISSION
LADY LAKE, FLORIDA
February 18, 2015

The Special Meeting of the Lady Lake Town Commission was held in the Commission Chambers at Lady Lake Town Hall, 409 Fennell Blvd., Lady Lake, Florida with Mayor Ruth Kussard presiding. The meeting convened at 4:30 p.m.

1. CALL TO ORDER

2. ROLL CALL: Tony Holden, Commissioner Ward 2
Dan Vincent, Commissioner Ward 3
Jim Richards, Commissioner Ward 5
Ruth Kussard, Mayor/Commissioner Ward 1

ABSENT: Paul Hannan, Commissioner Ward 4

STAFF MEMBERS PRESENT: Kris Kollgaard, Town Manager/Town Clerk; Thad Carroll, Growth Management Director; C.T. Eagle, Public Works Director; Wendy Then, Town Planner; Jeannine Michaud, Finance Director; and Nancy Slaton, Deputy Town Clerk

Others Present:

3. Public Comment

Mayor Kussard asked if there were any comments or questions. There were no comments or questions at this time.

Mayor Kussard announced that the presentation for agenda item #5 regarding Lady Lake Crossing Outparcel M would be heard first.

5. Conceptual Presentation for Lady Lake Crossing Outparcel M – Proposing Construction of a 4,500 Sq. Ft. Retail Building – Located at the Southwest Corner of N. Hwy 27/441 and Fennell Blvd. (Thad Carroll)

Growth Management Director Thad Carroll gave the background summary from the agenda item cover sheet which is on file in the Town Clerk's office. He stated that the applicant, SRK Lady Lake 43 & Associates, also known as The Benchmark Group, is the property owner of a 41-acre parcel located at the southeast corner of N. Hwy 27/441 and Fennell Boulevard, designated as Lady Lake Crossings. He stated that the property has the proper zoning designation of PUD-Planned Unit Development, which is governed under the Memorandum of Agreement (MOA) of Ordinance No. 2006-04.

Mr. Carroll reported that the Lady Lake Crossing Plaza recently completed the McDonald's restaurant and the developer has submitted plans to develop the 7-acre parcel into approximately 52,000 sq. ft. of retail space to be built into a three-tenant building to the rear. For the .65-acre outparcel located in between the McDonald's Restaurant and the Tire Kingdom Shop, the developer proposes a 4,000 sq. ft. retail building.

DRAFT

Mr. Carroll stated that at this time, the developer is ready to move forward with a proposal to develop the last outparcel (Outparcel M) as a 4,500 sq. ft. communication retail store. Prior to submitting the site plan application, the applicant would like to present the proposal as prepared to date and get the Commission's input. The following information was included in the packet:

- Planned Unit Development Memorandum of Agreement of Ord. No. 2006-04
- Architectural design exterior building elevations
- Conceptual Site Plan (pending, may be complete before the meeting)

The applicant is expected to submit all applications in accordance with the direction as provided by Town Commission to move forward with the process.

Mr. Carroll introduced Martin Dellebovi of The Benchmark Group, representing the applicant.

Mr. Dellebovi introduced himself and reviewed the conceptual plans for Outparcel M. He stated that the buildings for this parcel will incorporate all the same qualities as the other buildings they have built in this plaza to date. He stated that no variances are being requested at this time for signage as a monument sign will be erected on Hwy 27/441 as per code; although the retailer will be looking to have signage at a minimum on two signs of the building and may seek a variance for a sign on a third side if they feel they need that visibility at a later date.

Mr. Dellebovi stated that they are hoping to start construction sometime around mid-April and hope to turn the building over to the retailer at the end of August, with their opening sometime in November.

It was the consensus of the Commission that they were in favor of the Conceptual Presentation for Lady Lake Crossing Outparcel M – Proposing Construction of a 4,500 Sq. Ft. Retail Building – Located at the Southwest Corner of N. Hwy 27/441 and Fennell Blvd. as presented.

The original agenda order was then resumed.

4. Conceptual Presentation of the Citizen's First Bank Drive-Through Facility Major Site Plan – MJSP 01/15-004 – A Development Consisting of a 330 Sq. Ft. Financial Institution Building with the Provision of a Two Service Lane Drive-Through Facility – Located at 1105 Caballero Court (within The Villages Downtown Center in Spanish Springs (Thad Carroll)

Growth Management Director Thad Carroll gave the background summary from the agenda item cover sheet which is on file in the Town Clerk's office. He stated that the applicant, Martin L. Dzuro, on behalf of The Villages Operating Company, has re-submitted a Major Site Plan application for the construction of a Citizen's First Bank Drive-Through Facility to be located at 1105 Caballero Court, within The Villages Downtown Center in Spanish Springs (Alternate Key #3840565). He stated that the applicant proposes the construction of a 330 sq. ft. financial institution building with the provision a two-lane service drive-through facility. Mr. Carroll stated that the site plan was reviewed to determine if it is in compliance with the Land Development Regulations (LDRs) including parking, setbacks, landscaping, engineering, environmental protection and commercial design standards and was found to be compliant with all LDRs and codes, and staff recommends advancing this site plan for formal consideration.

Mr. Carroll stated that the subject property is approximately .30 +/- acres and is located within The Villages Center Planned Commercial Master Plan, also referenced as Spanish Springs. He stated

the property is currently vacant and is zoned "CP" Planned Commercial which permits development and construction of the proposed facility and is in accordance with the Memorandum of Agreement adopted by the Village Center and the Tri-County Villages Development of Regional Impact (DRI). He stated the requested use is consistent with the directives of the Comprehensive Plan and adopted Land Development Regulations.

Aerial views of the site and sketches of the proposed plans were shown, as were the proposed plantings. Mr. Carroll noted that the applicant has revamped the design to have the entrance come in off of Caballero on the southern side, and that all landscaping will be done in compliance with the codes. He noted three parking spaces will be removed as part of the application to allow for the turn radius for the drive-through.

Commercial Design Standards - The site plan and façade elevations for the Citizen's First Bank-Drive-Through Facility were included in the packet.

In accordance with the Land Development Regulations, Chapter 20, Section 20-3C).3).A)., new buildings should adopt one of the four recommended architectural styles: Frame Vernacular, Craftsman/Bungalow, Mediterranean, or Mission.

Mr. Carroll noted that the Citizen's First Bank Drive-Through Facility building features the Mission Architectural Style Design. The building exhibits:

- ✓ Mission shaped roof parapet
- ✓ Drive-through facility supported by large square piers
- ✓ Symmetrical façade
- ✓ Spanish tile roof
- ✓ Stucco finish on building exterior walls
- ✓ Mission style sconce (light fixtures) on facades
- ✓ Wide overhanging eaves
- ✓ Mission style doors and faux windows

Tree Requirements: In accordance with Chapter 10-Landscape and Tree Protection, the site is required to provide 48 tree caliper inches based on its .30-acre area (160"x .30). The landscaping tree proposal breakdown is as follows:

Existing trees to remain	48 tree caliper inches
Proposed canopy	44 tree caliper inches
Proposed understory & palms	102 tree caliper inches
Total tree caliper inches	194 tree caliper inches

The applicant is providing significantly more than the required on-site tree caliper inches.

Mr. Carroll noted that three oaks trees measuring 35 inches, 26 inches, and 20 inches respectively will be removed; however, the applicant will be preserving an existing 40" historic oak tree on the subject parcel.

Mr. Carroll stated the application was received on January 15, 2015. The Technical Review Committee members individually reviewed the application on Thursday, February 5, 2014, and provided outstanding comments regarding the Site Plan application. The Town Commission is tentatively scheduled to consider the Site Plan application on Monday, March 2, 2015 at 6:00 p.m.

DRAFT

Mr. Carroll stated that Martin Dzuro as applicant is present, as is Jeff Head as engineer, if there are any questions.

Commissioner Holden commented that he is not enthused about this project and thinks there could be a better location for it. He stated the residents are not happy about losing some of the green space in this area.

- Ken Kincaid of 1402 Plantation Dr. asked how many parking spaces will be lost. He stated he is concerned about parking in the area and suggested adding more drive-through lanes to the other bank site down the street instead.

Mr. Carroll replied that three parking spaces will be lost and that parking is spread out in a variety of areas for the commercial center and is considered adequate as per the requirements of the town center.

Marty Dzuro of The Villages Operating Company commented that the whole town center of Spanish Springs is an aggregate parking area and they keep close tabs on the required number and provided number of parking with each plan submitted. He stated there is an excess of parking spaces at this time for the aggregate parking, and that many people consider there is not enough parking because it is not as close to the door they want to go to. Mr. Dzuro stated they believe that the drive-through will alleviate the need for some parking at this bank site.

Mr. Dzuro also commented on the green space, stating that the trees they are removing are diseased and they will be planting even more, and will be saving the large historic tree. He also stated that this is a commercial building area and was always proposed as such, and although it was nice that folks could use this as open space in the interim, it was always proposed for development and will continue to have green space around it.

Mr. Dzuro stated that the Commission expressed concerns regarding the traffic entering near the intersection on Caballero on the first submittal of plans for this drive-through facility. He stated it was suggested at that time that the entrance be moved and have it come through the parking lot off of Caballero, and this worked out well using two drive-through lanes. Mr. Dzuro stated there have been no variances requested and all codes have been met with this re-submittal.

It was the consensus of the Commission that they were in favor of advancement of the conceptual presentation of the Citizen's First Bank Drive-Through Facility Major Site Plan – MJSP 01/15-004 – A Development Consisting of a 330 Sq. Ft. Financial Institution Building with the Provision of a Two Service Lane Drive-Through Facility as presented by a vote of 3-1 (Kussard).

Mayor Kussard stated that she has heard from so many residents who are opposed to this, and as a result, is opposed to this plan.

6. <u>Conceptual Presentation for the Sawmill Holdings, LLC Site – Proposing an RV Park Consisting of 185 Units – Located off of Hartsock Sawmill Road; Approximately 1,490 Lineal Feet East of the Intersection of S. Hwy 27/441 (Thad Carroll)</u>

Growth Management Director Thad Carroll gave the background summary from the agenda item cover sheet which is on file in the Town Clerk's office. He stated that the applicant, Greg Beliveau with LPG Urban & Regional Planners, on behalf of property owner, Sawmill Holdings, LLC, would

like to present a conceptual development plan on a 52-acre parcel located at 3105 Hartsock Sawmill Road, approximately 1,500 feet east of S. Highway 27/441 (Alternate Key #1771358). The property was annexed into the town in April of 2006 and adopted a zoning designation of Lady Lake Single Family Medium Density "RS-6" under Ordinance No. 2006-44 as part of a project known as Lady Lake Landing, LLC.

Mr. Carroll stated that at this time, the applicant has been retained by Randy Bates, Manager of Sawmill Holdings, LLC, to receive input and comments from the Town Commission to direct and advise the applicant on the next step regarding changing the land use from Single Family Medium Density "RS-6" to Commercial Tourist "CT" to allow for a 185-unit RV park. He stated comparable zoning in the town is Recreation Plantation. The conceptual plan highlights a complete facility to include clubhouse, bath house, registration/office building, and park. The projected density for the plan is 3.56 units/acre with a typical RV lot size of 3,600 sq. ft. The lots will be individually sold for fee-simple ownership.

Mr. Carroll reviewed aerial photos and drawings of the property. He stated that even though parts of the parcel are within designated wetlands and special flood hazard areas, the development layout takes into account these environmentally sensitive areas and offers compensating storage accordingly. Following the rezoning, during the site plan process, all environmental regulations are to be reviewed for adherence to the Town's Code and applicable County, State, and Federal regulations.

Prior to submitting for large scale comprehensive plan amendment and rezoning applications, the applicant would like to seek community input and support with the understanding that the conceptual workshop only offers non-binding guidance. The following items were included in the packet:

- Introduction letter
- Conceptual Plan
- Aerial elevation

Mr. Carroll stated that Greg Beliveau with LPG is present to review the plans.

Mr. Beliveau introduced himself and reviewed the proposed plans and commented that the present zoning use is residential to include six units per acre, and the property is approximately 52 acres. He stated there are over 20 acres of wetlands within this site, mostly on the northeastern portion of the property. Mr. Beliveau stated that the proposed zoning change to an RV park would result in less density per acre, or three units per acre. He stated that they are proposing an upscale RV resort and would utilize the Town's water and sewer services and would utilize Hartsock Sawmill Road as the entranceway. Mr. Beliveau stated they believe this would be an improvement to the area and would include amenities such as a clubhouse that takes advantage of the wetland system. He stated that the RV park use for the property would be a less intense development than the current proposed use for residential development, and would be a positive impact to the area.

Commissioner Richards asked how the applicant plans to contend with the fact that approximately one third of the proposed RV lots are in the 100 year flood plain.

Mr. Beliveau replied that these lots are not for permanent structures and would be evacuated if the need arose.

DRAFT

Commissioner Holden asked what type of RVs will be allowed in the park and if there will be permanent structures allowed.

Mr. Beliveau replied that they will allow only Class A type units, or high-end RVs, and there will be no permanent structures.

Commissioner Vincent asked if there will be full-time residents. He confirmed that they are planning to utilize Town utilities. He asked about the distance and green areas between the lots.

Mr. Beliveau stated that it is too early in the planning stages to answer regarding full-time residents, but that there will be landscaping between the lots and other amenities to attract return stays from visitors.

Mayor Kussard asked if there will be a manager on site seven days per week.

Mr. Beliveau confirmed that there would be.

- Mariane Hartsock-Patten of 3040 Hartsock Sawmill Rd. expressed her concern about the use of this property which abuts her property. She stated this property was annexed into the Lady Lake town limits and zoned RS-6. She stated that she thought that you could not build within so many feet of wetlands.

Mr. Carroll replied that the Town's code provides for a 25' building setback from wetlands.

- Ms. Hartsock-Patten also expressed other concerns such as traffic would be going through her property to access the RV park, and noise from generators, etc. that would disturb the peacefulness of her property. She stated her property is already zoned for RVs. She also stated that Hartsock Sawmill Road is very narrow. She asked if the developers have planned for fire hydrants, more police and fire protection, and school impacts. Ms. Hartsock Patten asked why the property owners in the area were not notified of this proposed development.

Mr. Carroll replied that property owners were not notified because this is just a conceptual plan and the first step in the process. If this is approved and the applicant proceeds with the rezoning request, property owners within 150' feet of the site will be notified and the site will be posted as required.

Mr. Beliveau commented that the RVs would be plugging into electricity and there would be no generators. He stated that Ms. Hartsock-Patten's concerns would be magnified if the developer was proposing to build the allowable number of residential homes on this tract, between 200 to 300 units, under current zoning. He stated that the developer will be complying with all the required aspects such as fire hydrants and will be required to do a traffic study, which he estimates will be less with an RV park than with a standard subdivision. Mr. Beliveau stated they will do improvements to Hartsock Sawmill Road if required by the County regardless of what development option is picked, and there are no school impacts with this option.

Town Manager Kris Kollgaard suggested that the applicant/developer set up a meeting with the residents in the area to discuss their concerns.

- Ms. Hartsock-Patten spoke from the audience expressing more concerns regarding easements and access.

DRAFT

Mr. Carroll explained that the applicant will address these issues if the application is formally submitted, but that this is just a conceptual presentation for the proposed type of use.

Commissioner Holden asked how close the lots are to be from the property line and if the developer has proposed a buffer between the properties.

Mr. Beliveau replied they will have a buffer there, but the width of it has not been determined yet, but will comply with the Town's LDRs if they move forward with this project.

- Daniel Patten of 3040 Hartsock Sawmill Rd. stated that he and his neighbor maintain a portion of Hartsock Sawmill Road because it was just a dirt road, and they put down millings. He stated he was told by code enforcement that he was not allowed to bring his tractor trailer truck home because the road does not allow vehicles over 12,000 lbs. for parking. He asked how they would allow RVs in there to park.

Mr. Carroll confirmed that Mr. Patten's property is in the county, not within Town limits. As such, he stated the code enforcement issue is with the county, and if any improvements are required to be made to the road to allow RVs to use the road, the applicant would have to address them as part of their application if they move forward with the project.

Mr. Beliveau stated that they will have a meeting with the residents prior to submitting the application to the Town.

Commissioner Richards stated the issue at hand is the idea for an RV park in this area, and he is receptive to it. He stated that if there is no public easement, the applicant will need to do his homework regarding easements and public access, as the county may make them rebuild all of Hartsock Sawmill Road.

It was the consensus of the Commission that they were in favor of the Conceptual Presentation for the Sawmill Holdings, LLC Site – Proposing an RV Park Consisting of 185 Units – Located off of Hartsock Sawmill Road; Approximately 1,490 Lineal Feet East of the Intersection of S. Hwy 27/441 as presented.

7. <u>Conceptual Presentation of Village Veranda at Lady Lake – Proposing a Facility to be Developed in Three Phases Including Three (3) Outparcels with Office and Clinic for a Total of 22,000 Sq. Ft. of Commercial Spaces, and a Proposed Multi-Story Building with 90 Assisted Living Units and 40 Memory Care Facility Units – Located on S. Hwy 27/441, Just North of the Too Your Health Spa (V) Project (Thad Carroll)</u>

Growth Management Director Thad Carroll gave the background summary from the agenda item cover sheet which is on file in the Town Clerk's office. He stated that on October 20, 2014, applicant Gregory A. Beliveau with LPG Urban & Regional Planners, on behalf of Village Veranda at Lady Lake, LLC, submitted an application for a Major Site Plan proposing a facility including three outparcels with office and clinic space, and a proposed multi-story building for an assisted living and memory care facility to be erected along S. Highway 27/441 (Alternate Key #1699100). The site plan was reviewed to determine if it is in compliance with the Land Development Regulations (LDRs) including parking, setbacks, landscaping, engineering, environmental protection and commercial design standards.

Mr. Carroll reported the subject area is approximately 8.22 +/- acres and is located just north of the Too Your Health Spa (V) project, approximately 260 lineal feet north of the intersection of Hartsock Sawmill Road and S. Highway 27/441. The property is zoned "CP" (Planned Commercial), which permits development and construction of the proposed improvements in accordance with the adopted CP Memorandum of Agreement of Ordinance No. 2013-06. The requested uses are consistent with the directives of the Comprehensive Plan, adopted Land Development Regulations, and Ordinance No. 2013-06.

Commercial Design Standards: The site plan and façade elevations for the Village Veranda at Lady Lake facility were included in the packet. In accordance with the Land Development Regulations, Chapter 20, Section 20-3C).3).A)., new buildings should adopt one of the four recommended architectural styles: Frame Vernacular, Craftsman/Bungalow, Mediterranean, or Mission. The Village Veranda at Lady Lake Facility building features the Frame Vernacular Style Design. The building exhibits:

- ✓ Steep pitched seam metal roof
- ✓ Five bay pattern along the front of the elevations
- ✓ Multi-pane sash windows
- ✓ Multi-floor windows align with first floor windows
- ✓ Wide overhanging towers
- ✓ Door entrance offset
- ✓ Pastel family colors for building exterior walls

As per Chapter 20, Section 20-3C).6).A)., glass shall be transparent; reflective glass will be defined as having a visible light reflectance rating of 15% or greater and darkly tinted glass windows include glass with a visible light transmittance rating of 35 or less.

Mr. Carroll reported that the applicant is requesting one waiver from glass transparency requirements. He stated the applicant's justification states that this use requires privacy to the residents of the units and if the proper reflective glass is not provided, this is not achieved. It also states that they have a use for ACLF and ALF and patient care as well, so privacy is very important in what they have to maintain. In short, the glass will be tinted for privacy, energy efficiency, and to control heat gain.

The elevation drawings and landscaping plan were shown, as well as photos depicting the type of plant materials proposed for the project.

Tree Requirements: In accordance with Chapter 10-Landscape and Tree Protection, the site is required to provide 1315.2 tree caliper inches based on its .8.22-acre area (160"x 8.22). The landscaping tree proposal breakdown is as follows:

Existing trees to remain	1526 tree caliper inches
Proposed canopy & understory trees	542 tree caliper inches
Total tree caliper inches	2068 tree caliper inches

Mr. Carroll noted that the applicant is providing significantly more than the required on-site tree caliper inches. It was noted that no historic trees will be removed for this development.

Mr. Carroll stated the application was received on October 20, 2014. The Technical Review Committee members individually reviewed the application on Thursday, February 5, 2014, and

DRAFT

provided outstanding comments regarding the Site Plan application. The Town Commission is tentatively scheduled to consider the Site Plan application on Monday, March 2, 2015 at 6:00 p.m.

Mr. Carroll turned the presentation over to Mr. Beliveau.

Mr. Beliveau reviewed highlights of the project, reiterating that the only variance requested is for the privacy glass for the residents. He stated that this project has a connection to the spa next door per the memorandum of agreement, and they will be connecting to the spa's lift station for ease of access for sewer, but will be connecting to water from Highway 27/441. He stated they went with the vernacular architectural design after a request by staff to do something different. Mr. Beliveau stated that market studies show that the need for assisted living facilities in this area is awesome.

Mayor Kussard noted that there were commercial spaces available in addition to the assisted living and memory facilities. She asked Mr. Beliveau whether it would be for doctor's offices or retail.

Mr. Beliveau replied that the commercial buildings would strictly be medical (and adult day care) to augment the facility, and that there would be no retail.

Mr. Beliveau presented some three dimensional renderings of the project site and building elevations, which showed more detail and perspective.

Mayor Kussard confirmed with Mr. Beliveau that the memory care facility would be locked.

Commissioner Holden stated he liked this development and agreed there was a need for it, but voiced his concern regarding there not being an access road. He stated this is a perfect reason why the Town needs an ordinance regarding access roads as there should have been one from Hartsock Sawmill Road for both the spa and property to be developed to the north of it. He stated this is a problem as there will be a lot of traffic coming off of a six lane divided highway.

Mr. Carroll responded that per the development agreement by the owner of the Too Your Health Spa, he has provided a 24 ft. access prior to the construction of phase three and an access easement is available for passage to keep people off the highway.

It was the consensus of the Commission that they were in favor of the Conceptual Presentation of Village Veranda at Lady Lake – Proposing a Facility to be Developed in Three Phases Including Three (3) Outparcels with Office and Clinic for a Total of 22,000 Sq. Ft. of Commercial Spaces, and a Proposed Multi-Story Building with 90 Assisted Living Units and 40 Memory Care Facility Units – Located on S. Hwy 27/441, Just North of the Too Your Health Spa (V) Project as presented.

8. ADJOURN: There being no further discussion; the meeting was adjourned at 5:28 p.m.

Kristen Kollgaard, Town Clerk

Ruth Kussard, Mayor

Minutes transcribed by Nancy Slaton, Deputy Town Clerk

DRAFT

MINUTES OF THE SPECIAL MEETING
OF THE LADY LAKE TOWN COMMISSION
LADY LAKE, FLORIDA
February 18, 2015

The Regular Meeting of the Lady Lake Town Commission was held in the Commission Chambers at Lady Lake Town Hall, 409 Fennell Blvd., Lady Lake, Florida with Mayor Ruth Kussard presiding. The meeting convened at 6:00 p.m.

A. CALL TO ORDER: Mayor Ruth Kussard

B. PROCEDURAL: *Citizens are encouraged to participate in the Town of Lady Lake meetings. Speakers will be limited to three (3) minutes. Additional time may be granted by the Mayor. Citizen groups are asked to name a spokesperson and the Mayor, at his/her discretion, may allow longer than three minutes. Upon being recognized by the Mayor, please approach the dais, state your name and address, and speak into the microphone. The order of agenda items may be changed if deemed appropriate by the Town Commission. Please be respectful of others and put your cell phone on silent mode.*

C. PLEDGE OF ALLEGIANCE:

D. INVOCATION[i]: Mayor Kussard called for a moment of silence as Father Ed Waters of St. Timothy Catholic Church was unable to attend.

E. ROLL CALL: Tony Holden, Commissioner Ward 2
Dan Vincent, Commissioner Ward 3
Jim Richards, Commissioner Ward 5
Ruth Kussard, Mayor/Commissioner Ward 1

ABSENT: Paul Hannan, Commissioner Ward 4

STAFF MEMBERS PRESENT: Kris Kollgaard, Town Manager; Derek Schroth, Town Attorney; Thad Carroll, Growth Management Director; Mike Burske, Parks & Recreation Director; C.T. Eagle, Public Works Director; Chief Chris McKinstry, Police Department; Jeannine Michaud, Finance Director; Marsha Brinson, Library Director; and Nancy Slaton, Deputy Town Clerk.

F. PUBLIC COMMENTS[ii]

Mayor Kussard asked if anyone in the audience would like to speak on any item. There were no comments.

G. CONSENT[iii]:

Mayor Kussard asked if the Commissioners had any questions or comments regarding the consent items.

1. <u>Minutes</u> – February 2, 2015 – Regular Commission Meeting

DRAFT

2. Consideration for New Song Community Church to Hold Easter Sunrise Service at the Log Cabin/Veterans Park on Easter Sunday (Mike Burske)

The background summary for this agenda item is on file in the Town Clerk's office. It states that the New Song Community Church is asking for the use of the lawn at the Log Cabin/Veterans Park for a sunrise service on April 5, 2015 between the hours of 6:00 a.m. to 8:00 a.m., which is before the park opens. Parking will be utilized at the Cabin and at their facility across the street. They are expecting 50 people to attend this event. No Town services are requested except the use of the power. As this is Easter Sunday, the Parks and Recreation Director will work if there is a call for assistance. There is no fee for this facility or the use of the lawn listed in the Town's Code of Ordinances. The Chamber of Commerce was notified and has no problem with the activity. New Song Community Church has hosted this event at Veterans Park twice before and has been a great steward of the park.

Upon a motion by Commissioner Richards and seconded by Commissioner Vincent, the Commission approved Consent Items #G-1 and G-2 by a vote of 4 to 0.

H. OLD BUSINESS: No old business.

I. NEW BUSINESS:

3. Consideration of Approval to Submit an Application for an American Library Association (ALA) Grant (Marsha Brinson)

Library Director Marsha Brinson gave the background summary for this agenda item (on file in the Clerk's office). She stated that the American Library Association, in collaboration with the Space Science Institute, is offering public libraries a chance to host one of three traveling science and technology exhibits. She stated that they are designed to promote science, technology, engineering and math (STEM), and the Lady Lake Library would like to apply for the Discover Tech exhibit.

Ms. Brinson reported that grantees will receive the following if awarded:

1. One exhibit for 12 weeks, shipping and set up are at no cost to the grantee.
2. A cash grant of $1,000.00 to cover the cost of programming related to the exhibit.
3. A teaching guide, family guide and hands on activities.
4. A two day, in person, orientation.
5. Periodic webinars.
6. Access to a national network of STEM oriented organizations.

Ms. Brinson stated that the upstairs area of the library, as one exits the elevator, would be the ideal space for one of the exhibits. She stated the Discover Tech exhibit will help audiences understand the nature of 21st century technology and engineering, both high and low-tech, and their potential for helping to solve many of the world's problems. Through interactive displays, the exhibit will illustrate that engineers are real people who through a creative design process, arrive at practical solutions to society's problems. Visitors will also learn about the principles of energy as there are hands on exhibits such as a hand-crank generator that can be used to produce energy to power light bulbs; solar power will also be explored and a Tinkering Station will be available with various hands-on activities.

DRAFT

Ms. Brinson stated that this is a chance for the library to bring hands-on technical education to the community. She stated the application deadline is April 7, 2015.

Upon a motion by Commissioner Richards and seconded by Commissioner Holden, the Commission approved the Consideration to Submit an Application for an American Library Association (ALA) Grant, and accept if awarded, by a vote of 4 to 0.

4. Consideration to Host "Be Scam Smart" - Operation S.A.F.E. (Stop Adult Financial Exploitation) (Chris McKinstry)

Police Chief Chris McKinstry gave the background summary for this agenda item (on file in the Clerk's office). He stated that the Lady Lake Police Department (LLPD) is requesting to host Operation S.A.F.E. (Stop Adult Financial Exploitation) with the Florida Department of Financial Services on Wednesday, March 18, 2015, beginning at 10:30 a.m. at the Lady Lake Library.

Chief McKinstry stated that this partnership initiative for seniors, their family and caregivers, will discuss identifying fraudulent behavior and scams, as well as preventative measures to guard against identity theft. He stated that "Be Scam Smart" presentations will be conducted by representatives of Florida Chief Financial Officer Jeff Atwater's Office, himself and LLPD's Investigative Unit, and that this educational workshop will provide educational information to help seniors protect their identity and personal financial documents from being compromised.

Upon a motion by Commissioner Vincent and seconded by Commissioner Holden, the Commission approved the Consideration to Host "Be Scam Smart" - Operation S.A.F.E. (Stop Adult Financial Exploitation) by a vote of 4 to 0.

5. Consideration of the Purchase of One FDLE FALCON RapidID Edge Device Software and Fingerprint Scanner and Utilize the Town Forfeiture/Law Enforcement Trust Fund for This Purchase (Chris McKinstry)

Police Chief Chris McKinstry gave the background summary for this agenda item (on file in the Clerk's office). He stated that police officers are routinely provided with false information regarding a person's real identity in the hopes that they will escape arrest on an active warrant. He stated that even though names are little more than labels, removable or changeable at will, what does not changes are fingerprints. Fingerprints tend to be the gold standard because no two people, not even identical twins, have ever been found to have the same prints.

Chief McKinstry reported that DataWorks Plus SAF-ID (also known as RAPID-ID) is an extremely fast and accurate solution that uses advanced fingerprint matching techniques to provide positive identification of an individual. He stated SAF-ID allows an officer to scan a person's finger on any FBI approved fingerprint scanner and it will search a database for a positive match. He stated SAF-ID searches RISC, state and local AFIS using a variety of fingerprint capture solutions, and search results include FCIC/NCIC history, mugshots (when on file), and active warrants.

Chief McKinstry stated that traditionally, fingerprint identification meant that the person, or at least their prints, had to be brought to the jail or a computer for comparison to those on record. He stated this is not only time-consuming, but sometimes legally impossible if the person does not want to go, and with this portable technology, fingerprint verification can be done roadside.

Chief McKinstry stated that DataWorks Plus is certified by FDLE to connect to and register with the Flacon Rapid ID system, and they are also the sole source retailer in the State of Florida. He stated that Town Auditor Chet Shumaker has confirmed that this request complies with the provisions of Section 932.7055, Florida Statutes (LEFT).

Mayor Kussard asked Chief McKinstry where this one device would be located and who would be using it.

Chief McKinstry replied that the software will be installed on all the supervisors' computers, and the device will be kept in the supervisor's office, and if it is needed, it will be transported to the scene for identification.

Upon a motion by Commissioner Holden and seconded by Commissioner Richards, the Commission approved the Consideration of the Purchase of One FDLE FALCON RapidID Edge Device Software and Fingerprint Scanner and Utilize the Town Forfeiture/Law Enforcement Trust Fund for This Purchase by a vote of 4 to 0.

J. TOWN ATTORNEY'S REPORT:

The Town Attorney stated he had nothing to report this evening.

K. TOWN MANAGER'S REPORT:

Town Manager Kris Kollgaard stated she had nothing to report this evening.

L. MAYOR/COMMISSIONER'S REPORT:

Commissioner Richards commented that he noticed there was three times more revenue than planned came in from the Communications Services Tax. He asked if the Town received word that the audit proved the communications service provider was wrong, or if there was another reason for the increased revenue.

Town Manager Kris Kollgaard replied that the Department of Revenue (DOR) had withheld all the monies from that vendor when the Town was first notified of a perceived error, but they have now released some of the funds. She stated the Town is putting that revenue aside and not spending it pending the outcome of the audit.

Commissioner Richards stated it is now going on two years since the problem was first identified and asked when the audit might be completed.

Ms. Kollgaard replied that the DOR hopes to complete the audit in 2015, and then they give it another year and post the results; so the Town should receive any repayment somewhere around 2017. She stated she has spoken with the Town Attorney regarding the Town's options on this issue, with a lawsuit against DOR being a consideration, but she did not know if the Commission wanted to pursue that option.

Mayor Kussard brought up that Commission Holden suggested the Town should have an ordinance regarding access roads during the conceptual workshop meeting prior to this meeting. She asked if the Commission would support asking staff to draft an ordinance regarding access roads.

DRAFT

Commissioner Richards stated he thought it was a great idea, as did Commissioner Vincent. It was the consensus of the Commission to support the drafting of an access road ordinance.

M. PUBLIC COMMENTS[iv]:

Mayor Kussard asked if anyone in the audience would like to speak on any item; there were no comments.

N. ADJOURN

There being no further discussion, the meeting was adjourned at 6:10 p.m.

Kristen Kollgaard, Town Clerk

Ruth Kussard, Mayor

Minutes transcribed by Nancy Slaton, Deputy Town Clerk

[i] *Any invocation that may be offered before the official start of the Commission meeting shall be the voluntary offering of a private citizen, to and for the benefit of the Commission. The views or beliefs expressed by the invocation speaker have not been previously reviewed or approved by the Commission, and the Commission is not allowed by law to endorse the religious beliefs or views of this, or any other speaker.*

[ii] *This section is reserved for members of the public to bring up matters of concern or comments. It is not limited to items on the agenda and it is open to any concern or comments that the public may have.*

[iii] *All items listed under consent are considered routine by the Town Commission and will be enacted by one motion. There will be no separate discussion of these items unless a Town Commissioner so requests, in which event the item will be removed from the consent agenda and considered in its normal sequence.*

[iv] *This section is reserved for members of the public to bring up matters of concern or comments. It is not limited to items on the agenda and it is open to any concern or comments that the public may have.*

DRAFT

I-5

TOWN COMMISSION AGENDA ITEM

REQUESTED COMMISSION MEETING DATE: March 2nd, 2015

SUBJECT: Consideration to Authorize the Town Manager to Submit the Revised Wastewater Treatment Plant Reservation and Bulk Treatment Agreement to the City of Fruitland Park for Review and Consideration.

DEPARTMENT: PW - Utilities

STAFF RECOMMENDED MOTION: Authorize the Town Manager to submit the revised Wastewater Bulk Treatment Agreement to the City of Fruitland Park for review and consideration.

SUMMARY: Staff has been coordinating with the City of Fruitland Park staff for the possible implementation of a wastewater collection system interconnection between the two municipalities. The attached revised agreement stipulates the terms and conditions discussed with City of Fruitland Park staff after their initial review. The revised agreement will again be reviewed by the City of Fruitland Park and will be brought back to this Town Commission prior to execution of the agreement. The Town Attorney has reviewed and approved the attached agreement. Revisions from the original agreement are noted and Attachment "A" has no monetary changes; it is only broken down into 10,000 gallon increments instead of 100,000 gallon increments as was previously presented.

FISCAL IMPACT: None

[ ] Capital Budget
[ ] Operating
[ ] Other –

ATTACHMENTS: [ ] Ordinance [ ] Resolution [ ] Budget Resolution
[ ] Other
[X] Support Documents – Revised Wastewater Treatment Agreement with City of Fruitland Park

---

DEPARTMENT HEAD **Submitted** **Date:**02/24/2015

HR **Approved as to Form** **Date**

FINANCE DEPARTMENT **Approved as to Budget Requirements Date**

TOWN MANAGER **Approved Agenda Item for:** 3-2-15 **Date** 2/24/15

COMMISSION ACTION:

[ ] Approved as Recommended **[ ] Disapproved** **[ ] Tabled Indefinitely**

[ ] Continued to Date Certain **[ ] Approved with Modification**

WASTEWATER TREATMENT PLANT CAPACITY
RESERVATION AND BULK TREATMENT AGREEMENT

THIS AGREEMENT is made this ____ day of _____, _____. Between the TOWN OF LADY LAKE, a political subdivision in the state of Florida (hereinafter "Town"), and THE CITY OF FRUITLAND PARK.

Terms and Conditions

In consideration of the commitment of the Town to receive and treat the wastewater of the City of Fruitland Park, and of the commitment of the City of Fruitland Park to pay for the treatment of wastewater by the Town, the receipt and sufficiency of such commitments being hereby acknowledged, the parties agree to the following terms and conditions.

1. **Effective Date.** This Agreement shall be effective upon execution by both parties. Upon execution by both parties, this Agreement shall be recorded in the Official Records of Lake County, Florida.
2. **Term.** The term of this Agreement shall be ten (10) years from the Effective Date unless earlier terminated or extended by mutual written agreement.
3. **Capacity Reservation and Bulk Treatment.** The Town agrees to reserve for the use of the City of Fruitland Park, wastewater treatment capacity of up to 500,000 gallons per day (GPD), flow rates and charges to be reviewed and adjusted annually during the term of the agreement. To allow the Town sufficient time for any future plant expansion to accommodate the capacity utilized by the City of Fruitland Park, the City of Fruitland Park may not increase its utilization of the reserved capacity in any one year by more than 100,000 GPD above the average actual utilized capacity for the prior calendar year. GPD shall be measure on a ninety day average of daily flows.
4. **Service Rates for Wastewater Treatment.** The service rates for wastewater treated by the Town pursuant to the initial capacity reservation by the City of Fruitland Park shall be as stipulated in attachment "A" of this agreement and adjusted annually by the Town of Lady Lake to equal the Town's current approved rate structure for customer wastewater billing rates.

   The City of Fruitland Park will not provide bulk service pricing to those customers of the City of Fruitland Park whose wastewater is treated in the Town's treatment plant pursuant to this Agreement, and will limit wastewater services to those areas within the incorporated boundary of the City of Fruitland Park.
5. **Wastewater Quality.**
   A. The City of Fruitland Park shall undertake whatever procedures are necessary in the inspection, policing, and regulation of all wastewater introduced into the City of Fruitland Park wastewater collection systems, to ensure that the quality of raw wastewater transmitted by the City of Fruitland Park to the Town shall not exceed the following criteria:

(1)	BOD	-	350 ppm
	TSS	-	350 ppm
	Fats, Oil, Grease	-	50 ppm
	Hydrogen, Sulfide	-	3.00 ppm

(2) In addition, the wastewater shall not contain the following pollutants:
   (a) Pollutants which create a fire or explosion hazard.

(b) Pollutants which will cause corrosive structural damage, but in no case discharges with pH lower than 5.5 or higher than 9.5.

(c) Solid or viscous pollutants in amounts which will cause interference with the operation of the treatment facilities.

(d) Any pollutant, including oxygen-demanding pollutants (BOD, etc.) released in a discharge of such volume or strength as to cause interference in the treatment facilities.

(e) Heat in amounts which will inhibit biological activity in the treatment facilities resulting in interference, but in no case heat in such quantities that the temperature at the treatment plant influent (one hundred four (104) degrees Fahrenheit).

(f) Unpolluted waters such as stormwater, groundwater, roof runoff, subsurface drainage or cooling water.

(3) Concentrations in excess of the limits and constituents defined below shall not be allowed. Should these limits be exceeded, Fruitland Park shall immediately eliminate the cause of the violation.

Antimony	1.00 ppm	Tin	5.00 ppm
Arsenic	0.25 ppm	Zinc	1.00 ppm
Barium	10.00 ppm	Total Metals	10.00 ppm
Beryllium	0.25 ppm	Fats, Oil and Grease	100.00 ppm
Boron	1.00 ppm	Iodine	10.00 ppm
Cadmium	0.70 ppm	Benzene compounds	5.00 ppm
Total Chromium	1.00 ppm	Carbon tetrachloride	10.00 ppm
Cobalt	0.30 ppm	Chloroethylene comps.	10.00 ppm
Copper	2.00 ppm	Chloroethene compounds	5.00 ppm
Cyanide	0.50 ppm	Chloroethane compounds	10.00 ppm
Lead	0.40 ppm	Chloroform	10.00 ppm
Lithium	0.03 ppm	Pentachlorophenol	10.00 ppm
Manganese	1.50 ppm	Total Phenol	0.50 ppm
Mercury	0.005 ppm	Hydrogen Sulfide	6.00 ppm
Nickel	0.70 ppm	COD	600.00 ppm
Selenium	0.50 ppm	BOD	600.00 ppm
Silver	0.50 ppm	TSS	600.00 ppm

Should Fruitland Park transmit any of the above-listed items other than those addressed in 3 (b) below, Fruitland Park shall pay for any costs or damages the Town of Lady Lake incurs because of Fruitland Park's violation and the Town of Lady Lake may immediately terminate this agreement if not eliminated within 30 days of initial date of detection. Fruitland Park's uncured violation as determined by the Town shall be sufficient cause to terminate this agreement.

B. In the event that the City of Fruitland Park transmits to the Town wastewater which exceeds the limits for 5-day biochemical oxygen demands (~~BOC~~BOD), total suspended solids (TSS), Fats, Oils and Grease or Hydrogen Sulfide, then the Town may estimate the total volume of wastewater not meeting the requirements of Paragraph 5A, above, and assess and collect a surcharge from the City of Fruitland Park as follows:

BOD or TSS (whichever is higher)			
350 – 400 ppm	-	$	0.50/1000 gal
400 – 450 ppm	-	$	1.25/1000 gal
450 – 500 ppm	-	$	3.15/1000 gal
500 – 550 ppm	-	$	7.95/1000 gal
550 – 600 ppm	-	$	20.00/1000 gal
Fats, Oils and Grease	-	$	0.10/1000 gal
Hydrogen Sulfide	-	$	0.20/1000 gal

6. **Wastewater Treatment Standards**. The Town shall continuously accomplish all health hazard and pollutant removal standards as then required by applicable regulatory requirements.

7. **Resolution of Disputes Involving Raw Wastewater Quality or Wastewater Treatment Standards**. Before litigating any dispute under this agreement, the parties' representatives shall personally meet in good faith to resolve their dispute.

8. **Costs and Expenses.**
   A. City of Fruitland Park shall be responsible for all engineering expenses and infrastructure installation costs associated with the connection to the Town's wastewater collection system, including but not limited to wastewater collection and transmission lines, wastewater sampling station, wastewater ~~bi-directional~~ master meter, and related improvements to the Town's wastewater collection system. All related improvements must be approved by Town staff prior to implementation.
   B. Town will specify and approve the proposed associated infrastructure and equipment prior to providing the City of Fruitland Park a "Notice to Proceed". City of Fruitland Park will be responsible for all maintenance and replacement costs for all associated infrastructure up to point of connection and associated equipment located on Town facilities incurred throughout the term of this agreement.
   C. Except for charges for service and items specified in this agreement, each Party shall be wholly responsible for and shall pay all of any such Party's costs and expenses incurred in complying with the terms of this Agreement.
   D. The City of Fruitland Park shall not charge the Town, and the Town shall not charge the City of Fruitland Park any connection fees, tapping fees, impact fees or any fee or charge of any kind, except service rates and operational charges as set forth herein for any obligation incurred or service performed pursuant to this Agreement. The Town Commission of the Town of Lady Lake expressly waives the imposition of impact fees to the City of Fruitland Park concerning this agreement.
9. **Ownership and Maintenance Responsibilities.**
   A. City of Fruitland Park will be responsible for all costs associated with infrastructure installed as a part of this project. Including but not limited to, easement acquisition, engineering services, and all related materials and equipment.
   B. City of Fruitland Park will be responsible for all maintenance and replacement costs of installed infrastructure and equipment installed on or outside of Town facilities related to this project.

C. City of Fruitland Park will install a wastewater quality sampling station on its isolated discharge inlet into the Town's ~~liftstation~~lift station , specified and approved by Town at a location approved by the Town. Town will monitor and report findings of wastewater quality sampling via the City of Fruitland Park installed sampling station and or other sampling methods.

D. City of Fruitland Park will install and maintain a properly sized and Town approved ~~bi-directional~~ wastewater meter. Such meter will be calibrated by the City of Fruitland Park annually by a certified calibration professional approved by the Town.

10. **Applicable Law**. The terms and provisions of this Agreement shall be governed by the law of Florida.
11. **Compliance with the Law**. The Town and the City of Fruitland Park will comply with all applicable laws, rules, regulations and ordinances that shall apply to the conduct of the Parties, treatment of wastewater, manning of facilities, regulatory reports, measurement, testing, qualifications of operating personnel., and all other such laws and regulations which may be applicable to the performance of the Parties pursuant to this Agreement.
12. **Cooperation**. The Parties will each cooperate with the other in providing such documents, analyses, test reports, studies and all things reasonably necessary for harmonious and successful compliance with the terms of this Agreement.
13. **Copies**. This Agreement shall be executed in three (3) copies, each of which shall be an original. One copy shall be provided to the City of Fruitland Park, one copy shall be provided to the Town, and other copy shall be provided to the Florida Department of Environmental Protection.
14. **Force Majeure**. Throughout the period of time when performance of any provision of this Agreement shall be prevented by occurrences or events wholly outside the control of the Party failing to perform as a result of such occurrence or event ("force majeure"), then such Party shall be excused from performance under the terms of this Agreement, for only that period of time such performance is prevented by force majeure, and during the time which the defaulting Party has made diligent effort to cure such default. With the exception of involuntary bankruptcy, this provision excusing performance during force majeure shall not apply to the payment of rates as specified by this Agreement.
15. **Notices**. All Notices required or authorized under this Agreement shall be given in writing and shall be served by mail or hand-delivery on the Parties at the addresses listed below:

Town:	Town of Lady Lake Town Manager 409 Fennell Blvd Lady Lake, FL 32159
City of Fruitland Park	City of Fruitland Park City Manager 506 West Berckman Street Fruitland Park, FL 34731

16. **Disclaimer of Third-Party Beneficiaries**. This agreement is solely for the benefit of the formal Parties hereto, and no right or cause of action shall accrue upon or by reason thereof, to or for the benefit of any third party not a formal Party hereto.
17. **Costs and Attorney's Fees**. In the event that the City of Fruitland Park or the Town is required to enforce this Agreement by Court proceedings or otherwise, by instituting suit or otherwise,

then the prevailing Party shall be entitled to recover from the other Party all costs incurred, including reasonable attorney's fees in such actions, including appeals.

18. **Effect of Waiver.** Failure to insist upon strict compliance with any of the terms, covenants, or conditions, nor shall any waiver or relinquishment of any right or power hereunder at any one time or times be deemed a waiver or relinquishment of such right or power at any other time or times.

19. **Severability**. If any part of this Agreement is found invalid or unenforceable by a court or administrative agency, or by reason of changes in State or Federal laws or regulations, such invalidity or unenforceability shall not affect the other parts of this Agreement, the rights and obligations of the Parties contained herein not materially prejudiced, and if the intentions of the Parties can continue to be effectuated. To that end, this Agreement is declared to be severable.

~~19.~~20. **Termination Without Cause**. ~~Early termination would result in severe hardship to the City of Fruitland Park. A 30 month termination notice from the Town of Lady Lake would allow Fruitland Park enough time to find an alternative wastewater treatment solution, stipulations included in the Wastewater Standards portion of this agreement being paramount.~~The Town or Fruitland Park may terminate this Agreement without cause by providing 30 months written notice to the non-terminating party.

THIS WRITTEN AGREEMENT constitutes the entire agreement between the Parties, and has been entered into voluntarily and with independent advice and legal counsel, and has been executed by the authorized representative of each Party on the date first written above. Modifications to and waiver of the provisions herein shall be made in writing by the Parties hereto.

ATTEST:

TOWN OF LADY LAKE

_____

By: _____

Print Name: _____

Ruth Kussard, Mayor

(Corporate Seal)

ATTEST:

CITY OF FRUITLAND PARK, FLORIDA

_____

By: _____

Print Name: _____

FOR THE USE AND RELIANCE OF THE TOWN OF LADY LAKE, FLORIDA, ONLY, APPROVED AS TO FORM AND LEGALITY _____, 2014

_____
Derek Schroth
Town Attorney
Town of Lady Lake

STATE OF FLORIDA
COUNTY OF LAKE

The foregoing instrument was acknowledged before me this _____ day of _____, 2014, By _____, the _____ of the Town of Lady Lake.

_____
NOTARY PUBLIC – STATE OF FLORIDA
(Signature of Notary Public)

_____
(Print name of Notary Public)
My Commission Expires: _____

_____
Serial/Commission Number
Personally Know _____ or Produced Identification _____
Type of Identification Produced: _____

STATE OF FLORIDA
COUNTY OF LAKE

The foregoing instrument was acknowledged before me this _____ day of _____, 2014, By _____, the _____ of the City of Fruitland Park.

_____
NOTARY PUBLIC – STATE OF FLORIDA
(Signature of Notary Public)

_____
(Print name of Notary Public)
My Commission Expires: _____

_____
Serial/Commission Number
Personally Know _____ or Produced Identification _____
Type of Identification Produced: _____

ATTACHMENT "A"

Fruitland Park Wastewater Interconnection Service Fees

Flow Rate(gpd)[1]	Operational Costs	Usage Charge	Base Facilites	Base Res Fee	Total Monthly Fee**
100,000	$10,573.33	$355.00	$5,400.00	$2,700.00	**$19,028.33**
110,000	$11,630.67	$390.50	$5,940.00	$2,970.00	**$20,931.17**
120,000	$12,688.00	$426.00	$6,480.00	$3,240.00	**$22,834.00**
130,000	$13,745.33	$461.50	$7,020.00	$3,510.00	**$24,736.83**
140,000	$14,802.67	$497.00	$7,560.00	$3,780.00	**$26,639.67**
150,000	$15,860.00	$532.50	$8,100.00	$4,050.00	**$28,542.50**
160,000	$16,917.33	$568.00	$8,640.00	$4,320.00	**$30,445.33**
170,000	$17,974.67	$603.50	$9,180.00	$4,590.00	**$32,348.17**
180,000	$19,032.00	$639.00	$9,720.00	$4,860.00	**$34,251.00**
190,000	$20,089.33	$674.50	$10,260.00	$5,130.00	**$36,153.83**
200,000	$21,146.67	$710.00	$10,800.00	$5,400.00	**$38,056.67**
210,000	$22,204.00	$745.50	$11,340.00	$5,670.00	**$39,959.50**
220,000	$23,261.33	$781.00	$11,880.00	$5,940.00	**$41,862.33**
230,000	$24,318.67	$816.50	$12,420.00	$6,210.00	**$43,765.17**
240,000	$25,376.00	$852.00	$12,960.00	$6,480.00	**$45,668.00**
250,000	$26,433.33	$887.50	$13,500.00	$6,750.00	**$47,570.83**
260,000	$27,490.67	$923.00	$14,040.00	$7,020.00	**$49,473.67**
270,000	$28,548.00	$958.50	$14,580.00	$7,290.00	**$51,376.50**
280,000	$29,605.33	$994.00	$15,120.00	$7,560.00	**$53,279.33**
290,000	$30,662.67	$1,029.50	$15,660.00	$7,830.00	**$55,182.17**
300,000	$31,720.00	$1,065.00	$16,200.00	$8,100.00	**$57,085.00**
310,000	$32,777.33	$1,100.50	$16,740.00	$8,370.00	**$58,987.83**
320,000	$33,834.67	$1,136.00	$17,280.00	$8,640.00	**$60,890.67**
330,000	$34,892.00	$1,171.50	$17,820.00	$8,910.00	**$62,793.50**
340,000	$35,949.33	$1,207.00	$18,360.00	$9,180.00	**$64,696.33**
350,000	$37,006.67	$1,242.50	$18,900.00	$9,450.00	**$66,599.17**
360,000	$38,064.00	$1,278.00	$19,440.00	$9,720.00	**$68,502.00**
370,000	$39,121.33	$1,313.50	$19,980.00	$9,990.00	**$70,404.83**
380,000	$40,178.67	$1,349.00	$20,520.00	$10,260.00	**$72,307.67**
390,000	$41,236.00	$1,384.50	$21,060.00	$10,530.00	**$74,210.50**
400,000	$42,293.33	$1,420.00	$21,600.00	$10,800.00	**$76,113.33**

410,000	$43,350.67	$1,455.50	$22,140.00	$11,070.00	**$78,016.17**
420,000	$44,408.00	$1,491.00	$22,680.00	$11,340.00	**$79,919.00**
430,000	$45,465.33	$1,526.50	$23,220.00	$11,610.00	**$81,821.83**
440,000	$46,522.67	$1,562.00	$23,760.00	$11,880.00	**$83,724.67**
450,000	$47,580.00	$1,597.50	$24,300.00	$12,150.00	**$85,627.50**
460,000	$48,637.33	$1,633.00	$24,840.00	$12,420.00	**$87,530.33**
470,000	$49,694.67	$1,668.50	$25,380.00	$12,690.00	**$89,433.17**
480,000	$50,752.00	$1,704.00	$25,920.00	$12,960.00	**$91,336.00**
490,000	$51,809.33	$1,739.50	$26,460.00	$13,230.00	**$93,238.83**
500,000	$52,866.67	$1,775.00	$27,000.00	$13,500.00	**$95,141.67**
510,000	$53,924.00	$1,810.50	$27,540.00	$13,770.00	**$97,044.50**
520,000	$54,981.33	$1,846.00	$28,080.00	$14,040.00	**$98,947.33**
530,000	$56,038.67	$1,881.50	$28,620.00	$14,310.00	**$100,850.17**
540,000	$57,096.00	$1,917.00	$29,160.00	$14,580.00	**$102,753.00**
550,000	$58,153.33	$1,952.50	$29,700.00	$14,850.00	**$104,655.83**
560,000	$59,210.67	$1,988.00	$30,240.00	$15,120.00	**$106,558.67**
570,000	$60,268.00	$2,023.50	$30,780.00	$15,390.00	**$108,461.50**
580,000	$61,325.33	$2,059.00	$31,320.00	$15,660.00	**$110,364.33**
590,000	$62,382.67	$2,094.50	$31,860.00	$15,930.00	**$112,267.17**
600,000	$63,440.00	$2,130.00	$32,400.00	$16,200.00	**$114,170.00**

Operational Costs*

Flow Rate	ERU's(per 250 gpd)	Term(Months)	ERU Rate	Monthly Fee
100,000	400	120	$3,172	$10,573.33
110,000	440	120	$3,172	$11,630.67
120,000	480	120	$3,172	$12,688.00
130,000	520	120	$3,172	$13,745.33
140,000	560	120	$3,172	$14,802.67
150,000	600	120	$3,172	$15,860.00
160,000	640	120	$3,172	$16,917.33
170,000	680	120	$3,172	$17,974.67
180,000	720	120	$3,172	$19,032.00
190,000	760	120	$3,172	$20,089.33
200,000	800	120	$3,172	$21,146.67
210,000	840	120	$3,172	$22,204.00
220,000	880	120	$3,172	$23,261.33
230,000	920	120	$3,172	$24,318.67
240,000	960	120	$3,172	$25,376.00
250,000	1000	120	$3,172	$26,433.33

260,000	1040	120	$3,172	$27,490.67
270,000	1080	120	$3,172	$28,548.00
280,000	1120	120	$3,172	$29,605.33
290,000	1160	120	$3,172	$30,662.67
300,000	1200	120	$3,172	$31,720.00
310,000	1240	120	$3,172	$32,777.33
320,000	1280	120	$3,172	$33,834.67
330,000	1320	120	$3,172	$34,892.00
340,000	1360	120	$3,172	$35,949.33
350,000	1400	120	$3,172	$37,006.67
360,000	1440	120	$3,172	$38,064.00
370,000	1480	120	$3,172	$39,121.33
380,000	1520	120	$3,172	$40,178.67
390,000	1560	120	$3,172	$41,236.00
400,000	1600	120	$3,172	$42,293.33
410,000	1640	120	$3,172	$43,350.67
420,000	1680	120	$3,172	$44,408.00
430,000	1720	120	$3,172	$45,465.33
440,000	1760	120	$3,172	$46,522.67
450,000	1800	120	$3,172	$47,580.00
460,000	1840	120	$3,172	$48,637.33
470,000	1880	120	$3,172	$49,694.67
480,000	1920	120	$3,172	$50,752.00
490,000	1960	120	$3,172	$51,809.33
500,000	2000	120	$3,172	$52,866.67
510,000	2040	120	$3,172	$53,924.00
520,000	2080	120	$3,172	$54,981.33
530,000	2120	120	$3,172	$56,038.67
540,000	2160	120	$3,172	$57,096.00
550,000	2200	120	$3,172	$58,153.33
560,000	2240	120	$3,172	$59,210.67
570,000	2280	120	$3,172	$60,268.00
580,000	2320	120	$3,172	$61,325.33
590,000	2360	120	$3,172	$62,382.67
600,000	2400	120	$3,172	$63,440.00

Usage Charge**

Flow Rate	ERU's(per 250 gpd)	Fee per 1000 gals	Monthly Fee
100,000	400	$3.55	$355.00
110,000	440	$3.55	$390.50

120,000	480	$3.55	$426.00
130,000	520	$3.55	$461.50
140,000	560	$3.55	$497.00
150,000	600	$3.55	$532.50
160,000	640	$3.55	$568.00
170,000	680	$3.55	$603.50
180,000	720	$3.55	$639.00
190,000	760	$3.55	$674.50
200,000	800	$3.55	$710.00
210,000	840	$3.55	$745.50
220,000	880	$3.55	$781.00
230,000	920	$3.55	$816.50
240,000	960	$3.55	$852.00
250,000	1000	$3.55	$887.50
260,000	1040	$3.55	$923.00
270,000	1080	$3.55	$958.50
280,000	1120	$3.55	$994.00
290,000	1160	$3.55	$1,029.50
300,000	1200	$3.55	$1,065.00
310,000	1240	$3.55	$1,100.50
320,000	1280	$3.55	$1,136.00
330,000	1320	$3.55	$1,171.50
340,000	1360	$3.55	$1,207.00
350,000	1400	$3.55	$1,242.50
360,000	1440	$3.55	$1,278.00
370,000	1480	$3.55	$1,313.50
380,000	1520	$3.55	$1,349.00
390,000	1560	$3.55	$1,384.50
400,000	1600	$3.55	$1,420.00
410,000	1640	$3.55	$1,455.50
420,000	1680	$3.55	$1,491.00
430,000	1720	$3.55	$1,526.50
440,000	1760	$3.55	$1,562.00
450,000	1800	$3.55	$1,597.50
460,000	1840	$3.55	$1,633.00
470,000	1880	$3.55	$1,668.50
480,000	1920	$3.55	$1,704.00
490,000	1960	$3.55	$1,739.50
500,000	2000	$3.55	$1,775.00
510,000	2040	$3.55	$1,810.50
520,000	2080	$3.55	$1,846.00

530,000	2120	$3.55	$1,881.50
540,000	2160	$3.55	$1,917.00
550,000	2200	$3.55	$1,952.50
560,000	2240	$3.55	$1,988.00
570,000	2280	$3.55	$2,023.50
580,000	2320	$3.55	$2,059.00
590,000	2360	$3.55	$2,094.50
600,000	2400	$3.55	$2,130.00

Base Facilities Fee*

Flow Rate	ERU's(per 250 gpd)	Fee per ERU	Monthly Fee
100,000	400	$13.50	$5,400.00
110,000	440	$13.50	$5,940.00
120,000	480	$13.50	$6,480.00
130,000	520	$13.50	$7,020.00
140,000	560	$13.50	$7,560.00
150,000	600	$13.50	$8,100.00
160,000	640	$13.50	$8,640.00
170,000	680	$13.50	$9,180.00
180,000	720	$13.50	$9,720.00
190,000	760	$13.50	$10,260.00
200,000	800	$13.50	$10,800.00
210,000	840	$13.50	$11,340.00
220,000	880	$13.50	$11,880.00
230,000	920	$13.50	$12,420.00
240,000	960	$13.50	$12,960.00
250,000	1000	$13.50	$13,500.00
260,000	1040	$13.50	$14,040.00
270,000	1080	$13.50	$14,580.00
280,000	1120	$13.50	$15,120.00
290,000	1160	$13.50	$15,660.00
300,000	1200	$13.50	$16,200.00
310,000	1240	$13.50	$16,740.00
320,000	1280	$13.50	$17,280.00
330,000	1320	$13.50	$17,820.00
340,000	1360	$13.50	$18,360.00
350,000	1400	$13.50	$18,900.00
360,000	1440	$13.50	$19,440.00
370,000	1480	$13.50	$19,980.00
380,000	1520	$13.50	$20,520.00

390,000	1560	$13.50	$21,060.00
400,000	1600	$13.50	$21,600.00
410,000	1640	$13.50	$22,140.00
420,000	1680	$13.50	$22,680.00
430,000	1720	$13.50	$23,220.00
440,000	1760	$13.50	$23,760.00
450,000	1800	$13.50	$24,300.00
460,000	1840	$13.50	$24,840.00
470,000	1880	$13.50	$25,380.00
480,000	1920	$13.50	$25,920.00
490,000	1960	$13.50	$26,460.00
500,000	2000	$13.50	$27,000.00
510,000	2040	$13.50	$27,540.00
520,000	2080	$13.50	$28,080.00
530,000	2120	$13.50	$28,620.00
540,000	2160	$13.50	$29,160.00
550,000	2200	$13.50	$29,700.00
560,000	2240	$13.50	$30,240.00
570,000	2280	$13.50	$30,780.00
580,000	2320	$13.50	$31,320.00
590,000	2360	$13.50	$31,860.00
600,000	2400	$13.50	$32,400.00

Base Facilities Res *

Flow Rate	ERU's(per 250 gpd)	Fee per ERU	Monthly Fee
100,000	400	$6.75	$2,700.00
110,000	440	$6.75	$2,970.00
120,000	480	$6.75	$3,240.00
130,000	520	$6.75	$3,510.00
140,000	560	$6.75	$3,780.00
150,000	600	$6.75	$4,050.00
160,000	640	$6.75	$4,320.00
170,000	680	$6.75	$4,590.00
180,000	720	$6.75	$4,860.00
190,000	760	$6.75	$5,130.00
200,000	800	$6.75	$5,400.00
210,000	840	$6.75	$5,670.00
220,000	880	$6.75	$5,940.00
230,000	920	$6.75	$6,210.00
240,000	960	$6.75	$6,480.00

250,000	1000	$6.75	$6,750.00
260,000	1040	$6.75	$7,020.00
270,000	1080	$6.75	$7,290.00
280,000	1120	$6.75	$7,560.00
290,000	1160	$6.75	$7,830.00
300,000	1200	$6.75	$8,100.00
310,000	1240	$6.75	$8,370.00
320,000	1280	$6.75	$8,640.00
330,000	1320	$6.75	$8,910.00
340,000	1360	$6.75	$9,180.00
350,000	1400	$6.75	$9,450.00
360,000	1440	$6.75	$9,720.00
370,000	1480	$6.75	$9,990.00
380,000	1520	$6.75	$10,260.00
390,000	1560	$6.75	$10,530.00
400,000	1600	$6.75	$10,800.00
410,000	1640	$6.75	$11,070.00
420,000	1680	$6.75	$11,340.00
430,000	1720	$6.75	$11,610.00
440,000	1760	$6.75	$11,880.00
450,000	1800	$6.75	$12,150.00
460,000	1840	$6.75	$12,420.00
470,000	1880	$6.75	$12,690.00
480,000	1920	$6.75	$12,960.00
490,000	1960	$6.75	$13,230.00
500,000	2000	$6.75	$13,500.00
510,000	2040	$6.75	$13,770.00
520,000	2080	$6.75	$14,040.00
530,000	2120	$6.75	$14,310.00
540,000	2160	$6.75	$14,580.00
550,000	2200	$6.75	$14,850.00
560,000	2240	$6.75	$15,120.00
570,000	2280	$6.75	$15,390.00
580,000	2320	$6.75	$15,660.00
590,000	2360	$6.75	$15,930.00
600,000	2400	$6.75	$16,200.00

[1] - Tiered Rate, charges up to flow rate shown, adjusted charges to next tier when flow rate is exceeded

* - Based on current fiscal year approved rates

** - Estimated at maximum tiered rates, actually metered usage will be billed monthly

K-6

TOWN COMMISSION AGENDA ITEM

REQUESTED COMMISSION MEETING DATE: March 2, 2015

SUBJECT: **MJSP 01/15-004 - Citizen's First Bank Drive-Through Facility Major Site Plan- Re Application — A Development Consisting of a 330-square-foot Financial Institution Building with the Provision of a Two-Lane Service Drive-Through Facility proposed at 1105 Caballero Court (Alternate Key 3840565).**

DEPARTMENT: **Growth Management**

STAFF RECOMMENDED MOTION:

Staff recommends approval of Major Site Plan MJSP 01/15-004 as presented with no waivers or variances since it meets site specifications as required per Town of Lady Lake Land Development Regulations and the provisions of the Village Downtown Center Memorandum of Agreement.

Applicant, Martin L. Dzuro, on behalf of the Villages Operating Company, has re-submitted a Major Site Plan application for the construction of new Citizen's First Bank-Drive-Through Facility to be located at 1105 Caballero Court, within the Villages Downtown Center in Spanish Springs, identified by alternate key number 3840565. The applicant proposes the construction of a 330-square-foot Financial Institution Building with the provision of a Two-Lane Service Drive-Through Facility. The site plan was reviewed to determine if it is in compliance with the Land Development Regulations (LDRs) including parking, setbacks, landscaping, engineering, environmental protection and commercial design standards.

The subject property is approximately .30+/- acres and is located within The Villages Center Planned Commercial Master Plan also referenced as Spanish Springs. The property is zoned "CP" Planned Commercial which permits development and construction of the proposed facility and is in accordance with the Memorandum of Agreement adopted by the Village Center and the Tri-County Villages Development of Regional Impact (DRI). The requested use is consistent with the directives of the Comprehensive Plan and adopted Land Development Regulations.

Site plans have been submitted by Jeffrey Allen Head, Professional Engineer with Farner Barley and Associates, Inc. The Landscaping and irrigation plans have been prepared and certified by Suzanne M. Stancil, Registered Landscape Architect with Michael Pape & Associates, P.A. For the proposed three-story Spanish Mediterranean

Building, the Architectural Exterior Elevations were drawn by KP Studio Architect P.A. The applicant has complied with requirements pursuant to the Land Development Regulations (LDRs) for site plans, including Chapter 7-Site Plan Development Regulations, Chapter 10–Landscaping & Tree Protection, Chapter 14-Water, Reuse Water, and Sewer Standard Specifications, and Chapter 20-Commercial Design Standards of the LDRs. Reviews were completed for the Town of Lady Lake by Town staff, Neel-Schaffer Engineering, and The Villages Fire Department for compliance with the Florida Fire Prevention Code. Attached are following reviews contained in the packet:

a. Town Engineer comments for the site plan dated February 18, 2015 (Satisfied).
b. Fire Review comments dated January 22, 2015 (Satisfied).
c. Waste Management comments dated January 27, 2015 (Satisfied).
d. Lady Lake Building Official comments dated January 26, 2015 (Satisfied).
e. Lake-Sumter MPO comments dated January 27, 2015 (Satisfied)
f. Lady Lake Public Works comments dated August 4, 2014 (Satisfied).
g. St. John's River Water Management District Letter Modification No. 4-069-19152-27 (Satisfied).

Commercial Design Standard

Attached are the site plan and façade elevations for the Citizen's First Bank- Drive-Through Facility:

In accordance with the Land Development Regulations, **Chapter 20, Section 20-3C).3).A)**., new buildings should adopt one of the four recommended architectural styles: Frame Vernacular, Craftsman/Bungalow, Mediterranean, or Mission.

The Citizen's First Bank Drive-Through Facility building features the Mission Architectural Style Design. The building exhibits:

✓ Shaped Mission Roof Parapet
✓ Drive-through facility supported by large square piers
✓ Symmetrical Façade
✓ Spanish Tile Roof
✓ Stucco Finish on Building Exterior Walls
✓ Mission Style Sconce (light fixtures) on facades
✓ Wide overhanging eaves
✓ Mission-style doors and faux windows

Tree Requirements:

In accordance with Chapter 10-Landscape and Tree Protection, the site is required to provide 48 tree caliper inches based on its .30-acre area (160"x .30). Please see the landscaping tree proposal breakdown:

Existing Trees to remain	48 tree caliper inches
Proposed Canopy	44 tree caliper inches
Proposed Understory & Palms	102 tree caliper inches
Total tree caliper inches	194 tree caliper inches

The applicant is providing significantly more than the required on-site tree caliper inches.

Notes:

- Three (3) oak trees measuring 35", 26", and 20" respectively will be removed; however, the applicant will be preserving an existing 40" Historic oak Tree on the subject parcel.
- The revised plan now utilizes the existing parking lot entrance off of Caballero Court, +/- 200 feet from the intersection of Calle Uno.

Public Meetings:

The **Technical Review Committee** members individually reviewed the application on Thursday, February 5, 2014, and provided all outstanding final comments regarding the Site Plan application February 18, 2015.

The **Planning and Zoning Board** does not review Site Plan applications.

The application was presented at the **Special Town Commission Conceptual Workshop Meeting** on February 18, 2015, which recommended the project to move forward with a 3-1 vote.

FISCAL IMPACT: **$0** **[ ] Capital Budget**
[ ] Operating
[ ] Other

ATTACHMENTS: **[ ] Ordinance** **[ ] Resolution** **[ ] Budget**

[X] Other – Site Plan

WD 2-23-2015 **[ ] Support Documents/Contracts Available for Review in Manager's Office**

DEPARTMENT HEAD	**Submitted** 2/23/15	**Date**
FINANCE DEPARTMENT	**Approved as to Budget Requirements**	**Date**
TOWN ATTORNEY	**Approved as to Form and Legality**	**Date**
TOWN MANAGER	**Approved Agenda Item for:** 3-2-15	**Date** 2/24/15

COMMISSION ACTION:

[ ] Approved as Recommended [ ] Disapproved

[ ] Tabled Indefinitely

[ ] Continued to Date Certain [ ] Approved with Modification

TOWN OF LADY LAKE
APPLICATION FOR SITE PLAN REVIEW

RECEIVED
JAN 15 2015
GROWTH MANAGEMENT DEPT.
TOWN LADY LAKE

1. Applicant's Name: The Villages Operating Company, Martin L. Dzuro, Vice President

   Telephone/Email: 352-753-6260 marty.dzuro@thevillages.com

   Applicant is: Owner _x_ Developer _x_ Lessee ___ Agent ___ Optionee ___

2. Owner's Name: The Villages Operating Company, Martin L. Dzuro, Vice President

   Address: 1045 Lake Sumter Landing, The Villages, Fl 32162

   Telephone/Email: 352-753-6260 marty.dzuro@thevillages.com

3. Engineer's Name: Farner Barley & Associates, Inc., Jeffrey A. Head, P.E.

   Address: 4450 NE 83rd Road, Wildwood, Fl 34785

   Telephone/Email: 352-748-3126 jhead@farnerbarley.com

   Reg. Number: 58058

4. Architect's Name: KP Studio Architects, Ed Plaster Jr., V.P.

   Address: 537 NE 83rd Avenue, Ocala, Fl 34470

   Telephone/Email: 352-622-7163 eplaster@kpstudioarchitect.com

   Registration Number: _____

5. Landscape Architect: Mike Pape & Associates, Inc.

   Address: 2351 SE 17th Street, Ocala, Fl 34471

   Telephone/Email: 352-351-3500 mail@mpala.net

   Registration Number: _____

6. Project Name: Citizens First Bank Drive Thru at Spanish Springs

   Physical Location/Address: 1129 Main Street, The Villages, Fl 32159

11. The property is located in the vicinity of the following streets:

    Caballero Court & Paige Place

TOWN OF LADY LAKE
APPLICATION FOR SITE PLAN REVIEW
Page 2

8. Area of property 12,364 Square Feet 0.28 Acres

9. The exact legal description of the property as shown on the Tax Receipt or the Warranty Deed, or attach a separate sheet to the application form:

   See plans

10. The property is currently zoned: PUD

11. Briefly describe the proposed project: 330 sf drive thru teller building with paved access lanes

    If for storage, what type of material will be stored? N/A

12. Have any development reviews and/or approvals been granted to this property?
    Yes ___ No X If yes, list the type, date and result:

13. Has any Variance been granted concerning this property? Yes ____ No X
    If yes, list the Case Number and briefly describe the nature of the Variance.

14. The plans shall be drawn on 24" x 36" sheets as a minimum, at the largest scale feasible. The plans or any portion thereof involving engineering, shall be certified by a professional engineer or landscape architect as required by SJRWMD. The following information must be included on the site plan:

    General Information

    X a. Name of project.

    X b. General statement of intended use of site.

    X c. Legal description of the property and size of parcel in acres or square feet.

    X d. Name and address of owner.

X e. Name, address and phone number of owner's agent.

X f. Name, address, signature and registration of the professionals preparing the plans.

X g. Date, north arrow and scale shall be designated and where appropriate, the same scale shall be used on all sheets.

X h. Vicinity map showing relationship of proposed development to the surrounding streets and thoroughfares, shall be at a scale no smaller than one inch equals five thousand two hundred eighty feet (1" = 5,280' or 1" = Mile).

X i. Linear dimensions of the site.

X j. Existing topography with a maximum of one (1) foot contour intervals for the proposed site.

X k. Finished grading elevations.

X l. Zoning of the site and of all adjacent parcels.

X m. All existing and proposed building restriction lines (i.e., highway setback lines, easements, covenants, rights-of-way and building setback lines).

X n. Percent of open space of site.

X o. Location of proposed signs.

Building and Structure

X a. Existing and proposed structures.

X b. Intended use.

X c. Number of stories.

X d. Height of building(s).

X e. Number of dwelling units and density.

N/A f. Projected number of employees, if applicable.

N/A g. If restaurant, show number of seats and occupancy load.

X h. Square footage for proposed development, i.e., gross square footage, nonstorage area, square footage of each story, gross square footage of sales area, etc.

X i. Photograph or sketch of proposed sign with dimensions and material type.

Street, Sidewalks, Driveways, Parking Areas and Loading Spaces

X a. Engineering plans and specifications for streets, alleys, sidewalks and driveways to include soil borings, if necessary.

X b. All parking spaces delineated.

X c. Number of parking spaces.

X d. Number and location of handicapped spaces.

X e. Number of square feet of paved parking and driveway area.

X f. Surface materials and cross-section of proposed paved areas.

N/A g. Fire lanes per the Standard Fire Prevention Code adopted in the Building and Fire Codes chapter.

X h. Description/location of proposed driveway(s) and median cut(s).

X i. Internal traffic control circulation plan, including directional arrows and signs to direct traffic flow, as necessary.

N/A j. Location of traffic-control signs and signalization devices, if required.

N/A k. Number and location of required loading spaces.

N/A i. Number and location of required bicycle spaces.

Drainage and Stormwater

N/A a. Soil classifications, cross-sections and details of proposed retention/detention ponds, swales, berms, etc., as required by SJRWMD.

N/A b. Size, material and location of stormwater structures and pipes.

X c. Indicate flood elevation for 100-year flood and any other information required in Environmental Regulations chapter.

Proposed Water, Sewer and Solid Waste Facilities

X a. Size, material, specifications and location of water mains, valves, services and fire hydrants.

X b. Size, material, specifications and location of sanitary sewer lines and laterals with submittal of a profile, if necessary.

N/A c. Size and location of septic tank and drainfield, if applicable.

N/A d. Grease separation system, if applicable: Size, location and materials.

X e. Location(s) and access provisions for refuse service, including pad, screening, fencing and landscaping, if applicable.

Landscaping

X a. Landscaping plan and provisions for maintenance including size, type and location of all landscaping, screens, walls, fences and buffers per the requirements in the Landscaping and Tree Protection chapter. If water efficient landscaping is used, the information required in that chapter should be included.

X b. Irrigation system plan.

Environmental Protection

N/A a. Natural features such as waterbodies, wetlands, native vegetative communities, etc., as required in the Environmental Regulations chapter.

N/A b. Conservation easements per the requirements.

X c. Provisions for the adequate control of erosion and sediment, including the location and description of the methods to be utilized during and after all phases of clearing, grading and construction.

ADDITIONAL INFORMATION TO BE PROVIDED

N/A a. Summary report of all concurrency data needed as noted in Chapter 4 of the Lady Lake Land Development Regulations.

TOWN OF LADY LAKE
APPLICATION FOR SITE PLAN REVIEW

X b. Drainage calculations as required in the Stormwater Management chapter.

N/A c. Fire flow calculations, if applicable.

N/A d. Lift station calculations, where required.

N/A e. Copy of HRS permit, where required.

N/A f. A construction cost estimate prepared by the engineer of record, which shall delineate any proposed improvements to be maintained by the Town.

N/A g. Environmental assessment per the requirements, if applicable.

N/A h. Any additional data, maps, plans or statements, as may be required, which is commensurate with the intent and purpose of the Code.

Signature of Applicant

PLEASE SUBMIT APPLICATION TO THE GROWTH DEVELOPMENT DEPARTMENT ACCOMPANIED BY EIGHT (8) COPIES OF THE SITE PLAN AND FOUR (4) 11 X 17 (SIGNED AND SEALED IF REQUIRED), APPROPRIATE REVIEW FEES, PROOF OF OWNERSHIP AND ALL APPLICABLE INFORMATION AND DOCUMENTATION AS REQUIRED BY LADY LAKE ORDINANCE 94-08, LAND DEVELOPMENT REGULATIONS, ADOPTED AUGUST 15, 1994.

Office Use:
Date Application Received: 01-15-15 Received by: Wthon

Fees Paid:
Site Development Plan - Minor
Site Development Plan - Major up to 100,000 sq. ft 2,190.00
Site Development Plan - Major 100,001 sq. ft. and up

OWNER'S AFFIDAVIT

STATE OF FLORIDA
COUNTY OF LAKE

Before me, the undersigned authority, personally appeared Martin L. Dzuro, who being by me first duly sworn on oath, deposes and says:

(1) That he/she is the fee-simple owner of the property legally described on page one of this application.

(2) That he/she desires approval for:

Citizens First Bank Drive Thru at Spanish Springs

(3) That he/she has appointed Jeffrey A. Head, P.E. to act as agent in his/her behalf to accomplish the above. The Owner is required to complete the APPLICANT'S AFFIDAVIT of this application if no agent is appointed to act in his/her stead.

Affiant (Owner's Signature)

The foregoing instrument was acknowledged before me this 13th day of January, 2015, by Martin L. Dzuro, who is personally known to me or who has produced N/A as identification and who did (did not) take an oath.

Notary Public Rita A. Deitrich

NOTARY PUBLIC STATE OF FLORIDA
RITA A. DEITRICH
MY COMMISSION # EE843615
EXPIRES: November 20, 2016

NOTE

All applications shall be signed by the owner of the property, or some person duly authorized by the owner to sign. This authority authorizing a person other than the owner to sign must be attached.

APPLICANT'S AFFIDAVIT

STATE OF FLORIDA
COUNTY OF LAKE

Before me, the undersigned authority, personally appeared Martin L. Dzuro, who being by me first duly sworn on oath, deposes and says:

(1) That he/she affirms and certifies that he/she understands and will comply with all ordinances, regulations, and provisions of the Town of Lady Lake, Florida, and that all statements and diagrams submitted herewith are true and accurate to the best of his/her knowledge and belief, and further, that this application and attachments shall become part of the Official Records of the Town of Lady Lake, Florida, and are not returnable.

(2) That he desires approval for:

Citizens First Bank Drive Thru at Spanish Springs

(3) That the submittal requirements for the application have been completed and attached hereto as part of this application.

Affiant (Applicant's Signature)

The foregoing instrument was acknowledged before me this 13th day of January, 2015, by Martin L. Dzuro, who is personally known to me or who has produced N/A as identification and who did (did not) take an oath.

Notary Public Rita A. Deitrich

NOTARY PUBLIC STATE OF FLORIDA
RITA A. DEITRICH
MY COMMISSION # EE843615
EXPIRES: November 20, 2016

PROPERTY RECORD CARD

General Information

Owner Name:	VILLAGES OPERATING COMPANY	**Alternate Key:**	3840565
Mailing Address:	1020 LAKE SUMTER LNDG THE VILLAGES, FL 32162 *Update Mailing Address*	**Parcel Number:**	06-18-24-300100001100
		Millage Group and City:	FVCD (Lady Lake)
		Total Millage Rate:	18.57630
		Trash/Recycling /Water/Info:	*My Public Services Map*
Property Location:	LADY LAKE FL 32159 *Update Property Location*	**Property Name:**	-- *Submit Property Name*
		School Locator:	*School and Bus Map*
Property Description:	LADY LAKE, VILLAGE CENTER DOWNTOWN BUILDING AREA 11 BEING IN| 07-18-24 PB 55 PG 72-79 | ORB 3171 PG 1171 |		

Land Data

Line	Land Use	Frontage	Depth	Notes	No. Units	Type	Class Value	Land Value
1	VACANT COMMERCIAL (1000)	0	0		13146	SF	$0.00	$262,920.00

Miscellaneous Improvements

There is no improvement information to display.

Sales History

O.R. Book / Page	Sale Date	Instrument	Q/U	Vac./Imp.	Sale Price
3171 / 1171	5/1/2006	WD	M	V	$1.00

Values and Estimated Taxes

Tax Authority	Just Value	Assessed Value	Taxable Value	Millage	Estimated Taxes
LAKE COUNTY BCC	$262,920	$262,920	$262,920	5.38560	$1,415.98
LAKE COUNTY MSTU AMBULANCE	$262,920	$262,920	$262,920	0.46290	$121.71
SCHOOL BOARD STATE	$262,920	$262,920	$262,920	5.74600	$1,510.74
SCHOOL BOARD LOCAL	$262,920	$262,920	$262,920	1.50000	$394.38
TOWN OF LADY LAKE	$262,920	$262,920	$262,920	3.75000	$985.95
ST JOHNS RIVER FL WATER MGMT DIST	$262,920	$262,920	$262,920	0.31640	$83.19
LAKE COUNTY VOTED DEBT SERVICE	$262,920	$262,920	$262,920	0.16000	$42.07
LAKE COUNTY WATER AUTHORITY	$262,920	$262,920	$262,920	0.25540	$67.15

NORTH LAKE HOSPITAL DIST	$262,920	$262,920	$262,920	1.00000	$262.92
				Total: 18.5763	**Total:** $4,884.09

The values displayed above may NOT reflect certified values and therefore are subject to change before being finalized for ad valorem assessment purposes. The estimated tax totals are based on prior year adopted millage rates until each taxing authority certifies proposed rates (annually in mid-August) and adopts final millage rates (late September) of each year. Estimated tax totals do not reflect non-ad valorem assessments. (Fire Fees, Solid Waste, etc.) Please consult the Tax Collector for actual taxation amounts.

Copyright © 2014 Lake County Property Appraiser. All rights reserved.
Property data last updated on 1 February 2015.

TECHNICAL REVIEW COMMITTEE COMMENTS
FINAL REVIEW 02/18/2015

Project: The Villages Operating Company for Citizen's First Bank-Drive-Through Facility Site

Proposal: New Major Site Plan No. 01/15-004 Application– 2nd and Last Round of Comments for Site.

Description:
On 01/15/2015, Town Staff received a new Major Site Plan application proposing the construction of new Citizen's First Bank- Drive-Through Facility to be located at 1105 Caballero Court, within the Villages Downtown Center in Spanish Springs, identified by alternate key number 3840565. The applicant proposes the construction of a 330-square-foot Financial Institution Building with the provision a two-lane service Drive-Through Facility. The site plan was reviewed to determine if it is in compliance with the Land Development Regulations (LDRs) including parking, setbacks, landscaping, engineering, environmental protection and commercial design standards.

The property is zoned "CP" Planned Commercial, which permits development and construction of the proposed facility and is in accordance with the Village Downtown Center Memorandum of Agreement adopted for this property. The Future Land Use Map designation for the site is RET (Commercial General-Retail Sales & Services). The requested use is consistent with the directives of the Comprehensive Plan and adopted Land Development Regulations.

GENERAL INFORMATION

The engineering plans submitted, consisting of ten (10) sheets, are drawn on 24"x36" sheets and certified by Jeffrey Allen Head, Professional Engineer with Farner Barley and Associates, Inc., dated January 13, 2015. The landscaping plans and Irrigation Plans submitted, consisting of three (3) sheets, are drawn on 24"x36" and certified by Suzanne M. Stanch, Registered Landscape Architect with Michael Pape and Associates, dated January 13, 2015.

Below are staff comments from the Town of Lady Lake regarding your development project. A hard copy via hand delivery and an electronic copy via e-mail are provided to the applicant. Comments are organized by department and must be sufficiently addressed before the proposal may proceed. If a re-submittal is warranted, the applicant shall provide written responses to each individual staff comment contained within this transmittal. **Re-submittals will not be accepted without bulleted written responses.**

Following submittal of any required revisions and responses, correspondence will be forwarded indicating the proposal's status, either: (1) requiring additional revision or documentations; or (2) ready for approval. Site plans are subject to public hearing, as well as plats, annexation requests, zoning requests, and comprehensive plan requests. When applicable, you will receive written notification that the item is scheduled for review by the Planning and Zoning Board or Town Commission. For additional information, contact Thad Carroll at (352) 751-1521.

GROWTH MANAGEMENT

Questions may be directed to Wendy Then, at wthen@ladylake.org

1. All comments addressed under the GM Review Report dated 01-29-2015.

POLICE

Questions may be directed to Chief Chris McKinstry at cmckinstry@ladylake.org

1. No comments at this time from the Police Dept. regarding this project.

FIRE

Questions may be directed to Capt. Dan Hickey, Fire Marshall with the Villages Fire Dept. at 352-205-8280

1. All comments addressed at this time as per communication dated 01-22-2015

BUILDING

Questions may be directed to Dallas Foss, Building Official at dfoss@usanova.com.

1. All comments addressed at this time as per communication dated 01-26-2015.

PUBLIC WORKS

Questions may be directed to Butch Goodman, Utilities Supervisor at bgoodman@ladylakepw.org

1. No comments at this time from the Lady Lake Public Works Dept. since Utilities is provided by the Villages.

ENGINEERING CONSULTANT

Questions may be directed to Chris Schultz, P.E., at chris.schultz@neel-schaffer.com

1. All comments addressed at this time as per communication dated 02-18-2015.

LAKE-SUMTER MPO

Questions may be directed to Olga Marcondes, P.E., at omarcondes@LakeSumterMPO.com or at 352-315-0170

1. Project satisfied by the Lake-Sumter MPO Office as per communication dated 08-26-2014 and subsequently on 01/27/2015.

NEEL-SCHAFFER
Solutions you can build upon

engineers
planners
surveyors
environmental scientists
landscape architects

February 18, 2015
NS Proj. No. NS.11785.013

Mrs. Wendy Then
Town of Lady Lake
409 Fennell Blvd.
Lady Lake, FL 32159

REF: CITIZENS FIRST BANK DRIVE THRU RE-SUBMITTAL- ENGINEERING REVIEW NO. 3

Dear Wendy;

Pursuant to your request, Neel-Schaffer, Inc. (NSI) has reviewed the Citizens First Bank Drive Thru plans. Our review of the plans focused on reviewing general site development issues based on the standards provided in the Land Development Regulations (LDR) of the Town of Lady Lake. Issues related to sewer and solid waste facilities and design, and historic and archeological resource protection were not reviewed.

Based on our review of the updated plans provided by your office, NSI has found the development plans to be satisfactory and in compliance with the Lady Lake LDRs. If you have questions or comments, please do not hesitate to contact me at 407-647-6623.

Sincerely,

Steven R. Cockerham, P.E.
Senior Project Manager

2301 Lucien Way, Suite 300 • Maitland, FL 32751 • 407-647-6623 fax: 407-539-0575

Villages Public Safety

Villages Center Community Development District.
3035 Morse Blvd
The Villages, Florida 32162
(352)205 8280
(352) 2058290 fax

Date: January 22, 2015

Citizen's First Bank Thru- Facility @ Spanish Springs.

I have discussed the building design as it related to the site and public way with Ed Plaster from KP Studios Architect. The project will have an overhang with the height less than the 13'6 required by the Florida Life Safety Book.
The fire department will be able to access the site from the public way (street) and would not have to access through the drive- thru lane.
I recommend signage to be placed prior to oversized vehicle committing to the drive lane. This will assist with oversized vehicles crashing into the overhead cover or needing to back out.

Please feel free to contact my office if needed.

The Villages Public Safety has no other comments on this project.

Capt. Daniel Hickey.
Fire Marshal

Wendy Then

From: Beck, Christopher <CBeck2@wm.com>
Sent: Tuesday, January 27, 2015 2:22 PM
To: Wendy Then
Subject: RE: Citizen's First Bank-Drive Thru Facility- Major Site Plan Re-Application

Wendy,

This location and size is correct.

Thanks,

Chris Beck
Wildwood Hauling
352-330-4546
352-267-9356

From: Wendy Then [mailto:wthen@ladylake.org]
Sent: Tuesday, January 27, 2015 9:17 AM
To: Beck, Christopher
Subject: FW: Citizen's First Bank-Drive Thru Facility- Major Site Plan Re-Application

Hi Chris,

I can't remember if I provided you with a copy of the re-application with the Citizen's First Bank- Drive Thru facility. Dumpster is proposed at the same spot.

Thanks.

From: Wendy Then
Sent: Thursday, January 15, 2015 4:17 PM
To: 'Chris Schultz'
Subject: Citizen's First Bank-Drive Thru Facility- Major Site Plan Re-Application

Hi Chris,

Please find enclosed a Major Site Plan Re-Application for the Citizens First Bank Drive Thru Facility. You may remember this project that was submitted couple of months ago. They have redesign the site and want to move forward the site plan process, so please see attached is a copy of the application, Civil Engineering plans, Site Lighting Plans, and Calculations.

Please review and have comments to us on or before Thursday, February 5, 2015.

Thank you for your expert assistance.

Note: Our office hours are 7:30 a.m. to 6:00 p.m.

Wendy Then, CFM
Town Planner
Town of Lady Lake
409 Fennell Blvd.
Lady Lake, FL 32159
352-751-1582
352-751-1514- Fax
Wthen@ladylake.org

Fla. Stat. 668.6076 "Under Florida law, e-mail addresses are public records. If you do not want your e-mail address released in response to a public-records request, do not send electronic mail to this entity. Instead, contact this office by phone or in writing."

Please think before you print.

Recycling is a good thing. Please recycle any printed emails.

Wendy Then

From: Dallas Foss <dfoss@usanova.com>
Sent: Monday, January 26, 2015 7:41 PM
To: Wendy Then
Subject: Citizens Bank

I have no conments on the plans submitted.

Dallas Foss
Town of Lady Lake
Building Official

Sent from Samsung RUGBY® Smart.

Wendy Then

From: Marcondes, Olga <omarcondes@lakecountyfl.gov>
Sent: Tuesday, January 27, 2015 1:23 PM
To: Wendy Then
Cc: Franco, Francis
Subject: RE: Citizen's First Bank-Drive-Thru- Re-application

Good Afternoon Wendy :-)

If the plans are not being changed, the original traffic analysis submitted for the proposed project is still valid and no additional analysis would be needed from the developer.

Regards,

Olga V. Marcondes
Transportation Planner

LAKE~SUMTER MPO
1616 South 14th Street
Leesburg, Florida 34748
Ph: (352) 315-0170
Fx: (352) 315-0993

www.LakeSumterMPO.com

"Promoting Regional Transportation Partnerships."

Go Green: Please do not print this e-mail unless you really need to.

From: Wendy Then [mailto:wthen@ladylake.org]
Sent: Tuesday, January 27, 2015 9:46 AM
To: Marcondes, Olga
Subject: Citizen's First Bank-Drive-Thru- Re-application

Good Morning Olga, ☺

How is it going lady?

The first Citizen's First Bank-Drive Thru Facility Site Plan application was denied by Town Commission, so they re-submitted the application once again. I just wanted to confirm that your approval is still current since nothing on the plans changed that would affect traffic. I have attached the new site plan for the re-application and the approval letter your provided to Town Staff in August 2014 for this project.

Thanks.

Note: Our office hours are 7:30 a.m. to 6:00 p.m.

Wendy Then, CFM
Town Planner
Town of Lady Lake

409 Fennell Blvd.
Lady Lake, FL 32159
352-751-1582
352-751-1514- Fax
Wthen@ladylake.org

Fla. Stat. 668.6076 "Under Florida law, e-mail addresses are public records. If you do not want your e-mail address released in response to a public-records request, do not send electronic mail to this entity. Instead, contact this office by phone or in writing."

Please think before you print.

St. Johns River
Water Management District
Hans G. Tanzler III, Executive Director

4049 Reid Street • P.O. Box 1429 • Palatka, FL 32178-1429 • (386) 329-4500
On the Internet at floridaswater.com.

August 12, 2014

The Villages Operating Company
1045 Lake Sumter Lndg
The Villages, FL 32162-2698

Re: Citizens First Bank Drive Thru at Spanish Springs
Letter Modification Number 4-069-19152-27
(Please reference the above number on any submittal)

The St. Johns River Water Management District is in receipt of your request for letter modification to Permit Number 4-069-19152-3. Based upon staff review of the information you submitted, the proposed modification qualifies for a letter modification pursuant to 40C-4.331(1)(b), Florida Administrative Code (F.A.C.). A copy of the modified permit is enclosed for your records.

Please be advised that the District has not published a notice in the newspaper to advise the public that it is issuing this letter of modification. If you do not publish a notice in the newspaper, a party's right to challenge the issuance of this letter modification extends for an indefinite period of time. If you wish to have certainty that the period of filing such a challenge is closed, then you may publish, at your own expense, such a notice in a newspaper of general circulation within the area that includes the project to which the modification applies. A copy of the form of the notice is attached for your use. If you have any questions, please contact Allyson Grosmaire at (407) 659-4860 or Sandra Joiner at (407) 659-4871

Sincerely,

M. Daniels

Margaret Daniels, Bureau Chief
Bureau of Regulatory Support

cc: District Permit File

GOVERNING BOARD

John A. Miklos, CHAIRMAN ORLANDO
Maryam H. Ghyabi, VICE CHAIRMAN ORMOND BEACH
Fred N. Roberts Jr., SECRETARY OCALA
George W. Robbins, TREASURER JACKSONVILLE

ST. JOHNS RIVER WATER MANAGEMENT DISTRICT
Post Office Box 1429
Palatka, Florida 32178-1429

PERMIT NO. 4-069-19152-27 **DATE ISSUED:** August 12, 2014

PROJECT NAME: Citizens First Bank Drive Thru at Spanish Springs

A PERMIT AUTHORIZING:
Modification of an existing Surface Water Management System for Orange Blossom Gardens-Southside, Permit No. 4-069-19152-3, to include the construction and operation of a 0.28-acre project known as Citizens First Bank Drive Thru at Spanish Springs, as per plans received by the District on July 17, 2014.

LOCATION:
SECTION(S): 7 TOWNSHIP(S): 18S RANGE(S): 24E
Lake County

ISSUED TO:
The Villages Operating Company
1045 Lake Sumter Lndg
The Villages, FL 32162-2698

Permittee agrees to hold and save the St. Johns River Water Management District and its successors harmless from any and all damages, claims, or liabilities which may arise from permit issuance. Said application, including all plans and specifications attached thereto, is by reference made a part hereof.

This permit does not convey to permittee any property rights nor any rights or privileges other than those specified herein, nor relieve the permittee from complying with any law, regulation or requirement affecting the rights of other bodies or agencies. All structures and works installed by permittee hereunder shall remain the property of the permittee.

This permit may be revoked, modified or transferred at any time pursuant to the appropriate provisions of Chapter 373, Florida Statutes.

PERMIT IS CONDITIONED UPON:

See conditions on attached "Exhibit A", dated August 12, 2014

AUTHORIZED BY: St. Johns River Water Management District
Division of Regulatory Engineering and Environmental Services

By: David Dewey

David Dewey
Service Center Director

"EXHIBIT A"
CONDITIONS FOR ISSUANCE OF PERMIT NUMBER 4-069-19152-27
The Villages Operating Company, Martin L. Dzuro
DATED August 12, 2014

1. Prior to lot or unit sales, or upon completion of construction of the system, whichever occurs first, the District must receive the final operation and maintenance document(s) approved by the District and recorded, if the latter is appropriate. For those systems which are proposed to be maintained by county or municipal entities, final operation and maintenance documents must be received by the District when maintenance and operation of the system is accepted by the local government entity. Failure to submit the appropriate final document will result in the permittee remaining personally liable for carrying out maintenance and operation of the permitted system.

2. All construction, operation and maintenance shall be as set forth in the plans, specifications and performance criteria as approved by this permit.

3. District authorized staff, upon proper identification, will have permission to enter, inspect and observe the system to insure conformity with the plans and specifications approved by the permit.

4. The permittee must implement and maintain all erosion and sediment control measures (best management practices) required to retain sediment on -site and to prevent violations of the water quality criteria and standards in chapters 17-4, 17-302, F.A.C. All practices must be in accordance with the guidelines and specifications in section 6 of the Florida Land Development Manual: A Guide to Sound Land and Water Management (Florida Department of Environmental Regulation 1988) unless a project - specific erosion and sediment control plan is approved as part of the permit in which case the practices must be in accordance with the plan. If site specific conditions require additional measures during any phase of construction or operation to prevent erosion or control sediment, beyond those specified in the erosion sediment control plan, the permittee must implement additional best management practices as necessary, in accordance with the specifications in section 6 of the Florida Land Development Manual: A guide to sound Land and Water Management (Florida Department of Environmental Regulation, 1988).

5. Stabilization measures shall be indicated for erosion and sediment control on disturbed areas as soon as practicable in or permanently ceased, but in no case more than 14 days after the construction activity in that portion of the site has temporarily or permanently ceased.

6. The operation phase of the permit shall not become effective until a Florida registered Professional Engineer certifies that the system, or independent portion of a system, has been constructed in accordance with the permit issued by the District, and the permittee receives written notification by District staff that the construction, alteration or maintenance has been completed according to the permit. Within 30 days after completion of construction of the surface water management system, or independent portion of the system, the permittee shall submit the certification or one set of plans which reflect the surface water management system as actually constructed. This submittal shall serve to notify the District that the system is ready for inspection. The permit may not be transferred to an operation and maintenance entity approved by the District until the operation phase of the permit becomes effective.

7. If any other regulatory agency should require revisions or modification to the permitted project, the District is to be notified of the previsions so that determination can be made whether a permit modification is required.

8. The District must be notified, in writing, within 30 days of any sale, conveyance or other transfer of a permitted system or facility or within 30 days of any transfer of ownership or control of the real property at which the permitted system or facility is located. All transfers of a permit are subject to the requirements of section 40C-1.612, F.A.C.

9. The permittee must require the contractor to review and maintain a copy of this permit, complete with all conditions, attachments, exhibits, and modifications in good condition at the construction site. The complete permit shall be available for review upon request by District representatives.

10. Construction or alteration of each phase or independent portion of the permitted surface water management system must be completed in accordance with the permitted plans and permit conditions prior to the initiation of the permitted use of site infrastructure located within the area served by that portion or phase of the system. Each phase or independent portion of the system must be complete in accordance with the permitted plans and permit conditions prior to transfer of responsibility for operation and maintenance of that phase or portion of the system to local government or other responsible entity.

11. To the extent permitted by Florida law, the permittee must hold and save the District harmless from any and all liability arising from property damage or personal injury as a result of the permitted, activities.

12. Nothing contained herein relieves the permittee from timely complying with applicable laws of other federal, state or local governments.

13. If and entity other than the permittee has been approved as the operation and maintenance entity the permittee may request transfer of the permit for a completed system or independent portion of a system to the District approved operation and maintenance entity at the time of submittal of the as - builts or Professional Engineer certification for construction of the permitted surface water management system.

14. All wetland areas or water bodies that are outside the specific limits of construction authorized by this permit must be protected from erosion, siltation, scouring or excess turbidity, and dewatering.

15. Prior to construction, the permittee must clearly designate the limits of construction on-site. The permittee must advise the contractor that any work outside the limits of construction, including clearing, may be a violation of this permit.

16. This permit for construction will expire two years from the date of issuance.

17. The proposed project shall be constructed and operated in accordance with the plans received by the District on July 17, 2014.

18. The permit does not authorize work in, on or over wetlands or other surface waters.

Notice Of Rights

1. A person whose substantial interests are or may be affected has the right to request an administrative hearing by filing a written petition with the St. Johns River Water Management District (District). Pursuant to Chapter 28-106 and Rule 40C-1.1007, Florida Administrative Code, the petition must be filed (received) either by delivery at the office of the District Clerk at District Headquarters, P. O. Box 1429, Palatka Florida 32178-1429 (4049 Reid St., Palatka, FL 32177) or by e-mail with the District Clerk at Clerk@sjrwmd.com, within twenty-six (26) days of the District depositing the notice of District decision in the mail (for those persons to whom the District mails actual notice), within twenty-one (21) days of the District emailing the notice of District decision (for those persons to whom the District emails actual notice), or within twenty-one (21) days of newspaper publication of the notice of District decision (for those persons to whom the District does not mail or email actual notice). A petition must comply with Sections 120.54(5)(b)4. and 120.569(2)(c), Florida Statutes, and Chapter 28-106, Florida Administrative Code. The District will not accept a petition sent by facsimile (fax), as explained in paragraph no. 4 below.

2. Please be advised that if you wish to dispute this District decision, mediation may be available and that choosing mediation does not affect your right to an administrative hearing. If you wish to request mediation, you must do so in a timely-filed petition. If all parties, including the District, agree to the details of the mediation procedure, in writing, within 10 days after the time period stated in the announcement for election of an administrative remedy under Sections 120.569 and 120.57, Florida Statutes, the time limitations imposed by Sections 120.569 and 120.57, Florida Statutes, shall be tolled to allow mediation of the disputed District decision. The mediation must be concluded within 60 days of the date of the parties' written agreement, or such other timeframe agreed to by the parties in writing. Any mediation agreement must include provisions for selecting a mediator, a statement that each party shall be responsible for paying its pro-rata share of the costs and fees associated with mediation, and the mediating parties' understanding regarding the confidentiality of discussions and documents introduced during mediation. If mediation results in settlement of the administrative dispute, the District will enter a final order consistent with the settlement agreement. If mediation terminates without settlement of the dispute, the District will notify all the parties in writing that the administrative hearing process under Sections 120.569 and 120.57, Florida Statutes, is resumed. Even if a party chooses not to engage in formal mediation, or if formal mediation does not result in a settlement agreement, the District will remain willing to engage in informal settlement discussions.

3. A person whose substantial interests are or may be affected has the right to an informal administrative hearing pursuant to Sections 120.569 and 120.57(2), Florida Statutes, where no material facts are in dispute. A petition for an informal hearing must also comply with the requirements set forth in Rule 28-106.301, Florida Administrative Code.

Notice Of Rights

4. A petition for an administrative hearing is deemed filed upon receipt of the complete petition by the District Clerk at the District Headquarters in Palatka, Florida during the District's regular business hours. The District's regular business hours are 8:00 a.m. – 5:00 p.m., excluding weekends and District holidays. Petitions received by the District Clerk after the District's regular business hours shall be deemed filed as of 8:00 a.m. on the District's next regular business day. The District's acceptance of petitions filed by e-mail is subject to certain conditions set forth in the District's Statement of Agency Organization and Operation (issued pursuant to Rule 28-101.001, Florida Administrative Code), which is available for viewing at floridaswater.com. These conditions include, but are not limited to, the petition being in the form of a PDF or TIFF file and being capable of being stored and printed by the District. Further, pursuant to the District's Statement of Agency Organization and Operation, attempting to file a petition by facsimile is prohibited and shall not constitute filing.

5. Failure to file a petition for an administrative hearing within the requisite timeframe shall constitute a waiver of the right to an administrative hearing. (Rule 28-106.111, Florida Administrative Code).

6. The right to an administrative hearing and the relevant procedures to be followed are governed by Chapter 120, Florida Statutes, Chapter 28-106, Florida Administrative Code, and Rule 40C-1.1007, Florida Administrative Code. Because the administrative hearing process is designed to formulate final agency action, the filing of a petition means the District's final action may be different from the position taken by it in this notice. A person whose substantial interests are or may be affected by the District's final action has the right to become a party to the proceeding, in accordance with the requirements set forth above.

7. Pursuant to Section 120.68, Florida Statutes, a party to the proceeding before the District who is adversely affected by final District action may seek review of the action in the District Court of Appeal by filing a notice of appeal pursuant to Rules 9.110 and 9.190, Florida Rules of Appellate Procedure, within 30 days of the rendering of the final District action.

8. A District action is considered rendered, as referred to in paragraph no. 7 above, after it is signed on behalf of the District and filed by the District Clerk.

9. Failure to observe the relevant timeframes for filing a petition for judicial review as described in paragraph no. 7 above will result in waiver of that right to review.

Notice Of Rights

Certificate of Service

I HEREBY CERTIFY that a copy of the foregoing Notice of Rights has been sent to the permittee:

The Villages Operating Company
1045 Lake Sumter Lndg
The Villages, FL 32162-2698

This 12th day of August, 2014.

M. Daniels

Margaret Daniels, Bureau Chief
Bureau of Regulatory Support
St. Johns River Water Management District
4049 Reid Street
Palatka, FL 32177-2529
(386) 329-4570

Permit Number: 4-069-19152-27

NOTICING INFORMATION

Dear Permittee:

Please be advised that the St. Johns River Water Management District will not publish a notice in the newspaper advising the public that it has issued a permit for this project.

Newspaper publication, using the District's notice form, notifies members of the public of their right to challenge the issuance of the permit. If proper notice is given by newspaper publication, then there is a 21-day time limit for someone to file a petition for an administrative hearing to challenge the issuance of the permit.

To close the point of entry for filing a petition, you may publish (at your own expense) a one-time notice of the District's decision in a newspaper of general circulation within the affected area as defined in Section 50.011 of the Florida Statutes. If you do not publish a newspaper notice to close the point of entry, the time to challenge the issuance of your permit will not expire and someone could file a petition even after your project is constructed.

A copy of the notice form and a partial list of newspapers of general circulation are attached for your convenience. However, you are not limited to those listed newspapers. If you choose to close the point of entry and the notice is published, the newspaper will return to you an affidavit of publication. In that event, it is important that you either submit a scanned copy of the affidavit by emailing it to *compliancesupport@sjrwmd.com* (preferred method) **or** send a copy of the original affidavit to:

Margaret Daniels, Bureau Chief
Bureau of Regulatory Support
4049 Reid Street
Palatka, FL 32177

If you have any questions, please contact the Bureau of Regulatory Support at (386) 329-4570.

Sincerely,

M. Daniels

Margaret Daniels, Bureau Chief

Bureau of Regulatory Support

NOTICE OF AGENCY ACTION TAKEN BY THE
ST. JOHNS RIVER WATER MANAGEMENT DISTRICT

Notice is given that the following permit was issued on _____:

(Name and address of applicant)_____
permit#_____. The project is located in _____County, Section _____, Township _____ South, Range _____ East. The permit authorizes a surface water management system on _____ acres for _____ known as _____. The receiving water body is _____.

A person whose substantial interests are or may be affected has the right to request an administrative hearing by filing a written petition with the St. Johns River Water Management District (District). Pursuant to Chapter 28-106 and Rule 40C-1.1007, Florida Administrative Code (F.A.C.), the petition must be filed (received) either by delivery at the office of the District Clerk at District Headquarters, P.O. Box 1429, Palatka FL 32178-1429 (4049 Reid St, Palatka, FL 32177) or by e-mail with the District Clerk at Clerk@sjrwmd.com, within twenty-one (21) days of newspaper publication of the notice of District decision (for those persons to whom the District does not mail or email actual notice). A petition must comply with Sections 120.54(5)(b)4. and 120.569(2)(c), Florida Statutes (F.S.), and Chapter 28-106, F.A.C. The District will not accept a petition sent by facsimile (fax). Mediation pursuant to Section 120.573, F.S., may be available and choosing mediation does not affect your right to an administrative hearing.

A petition for an administrative hearing is deemed filed upon receipt of the complete petition by the District Clerk at the District Headquarters in Palatka, Florida during the District's regular business hours. The District's regular business hours are 8 a.m. – 5 p.m., excluding weekends and District holidays. Petitions received by the District Clerk after the District's regular business hours shall be deemed filed as of 8 a.m. on the District's next regular business day. The District's acceptance of petitions filed by e-mail is subject to certain conditions set forth in the District's Statement of Agency Organization and Operation (issued pursuant to Rule 28-101.001, Florida Administrative Code), which is available for viewing at floridaswater.com. These conditions include, but are not limited to, the petition being in the form of a PDF or TIFF file and being capable of being stored and printed by the District. Further, pursuant to the District's Statement of Agency Organization and Operation, attempting to file a petition by facsimile (fax) is prohibited and shall not constitute filing.

The right to an administrative hearing and the relevant procedures to be followed are governed by Chapter 120, Florida Statutes, Chapter 28-106, Florida Administrative Code, and Rule 40C-1.1007, Florida Administrative Code. Because the administrative hearing process is designed to formulate final agency action, the filing of a petition means the District's final action may be different from the position taken by it in this notice. **Failure to file a petition for an administrative hearing within the requisite time frame shall constitute a waiver of the right to an administrative hearing. (Rule 28-106.111, F.A.C.).**

If you wish to do so, please visit http://floridaswater.com/nor_dec/ to read the complete Notice of Rights to determine any legal rights you may have concerning the District's decision(s) on the permit application(s) described above. You can also request the Notice of Rights by contacting the Director of Regulatory Support, 4049 Reid St., Palatka, FL 32177-2529, tele. no. (386)329-4570.

NEWSPAPER ADVERTISING

ALACHUA
The Alachua County Record, Legal Advertising
P. O. Box 806
Gainesville, FL 32602
352-377-2444/ fax 352-338-1986

BAKER
Baker County Press, Legal Advertising
P. O. Box 598
Maclenny, FL 32063
904-259-2400/ fax 904-259-6502

BRAFORD
Bradford County Telegraph, Legal Advertising
P. O. Drawer A
Starke, FL 32901
904-964-6305/ fax 904-964-8628

BREVARD
Florida Today, Legal Advertising
P. O. Box 419000
Melbourne, FL 32941-9000
321-242-3832/ fax 321-242-6618

CLAY
Clay Today, Legal Advertising
1560 Kinsley Ave., Suite 1
Orange Park, FL 32073
904-264-3200/ fax 904-264-3285

DUVAL
Daily Record, Legal Advertising
P. O. Box 1769
Jacksonville, FL 32201
904-356-2466 / fax 904-353-2628

FLAGLER
Flagler Tribune, c/o News Journal
P. O. Box 2831
Daytona Beach, FL 32120-2831
386- 681-2322

INDIAN RIVER
Vero Beach Press Journal, Legal Advertising
P. O. Box 1268
Vero Beach, FL 32961-1268
772-221-4282/ fax 772-978-2340

LAKE
Daily Commercial, Legal Advertising
P. O. Drawer 490007
Leesburg, FL 34749
352-365-8235/fax 352-365-1951

MARION
Ocala Star Banner, Legal Advertising
2121 SW 19th Avenue Road
Ocala, FL 34474
352-867-4010/fax 352-867-4126

NASSAU
News-Leader, Legal Advertising
P. O. Box 766
Fernandina Beach, FL 32035
904-261-3696/fax 904-261-3698

OKEECHOBEE
Okeechobee News, Legal Advertising
P. O. Box 639
Okeechobee, FL 34973-0639
863-763-3134/fax 863-763-5901

ORANGE
Sentinel Communications, Legal Advertising
633 N. Orange Avenue
Orlando, FL 32801
407-420-5160/ fax 407-420-5011

OSCEOLA
Little Sentinel, Legal Advertising
633 N. Orange Avenue
Orlando, FL 32801
407-420-5160/ fax 407-420-5011

PUTNAM
Palatka Daily News, Legal Advertising
P. O. Box 777
Palatka, FL 32178
386-312-5200/ fax 386-312-5209

ST. JOHNS
St. Augustine Record, Legal Advertising
P. O. Box 1630
St. Augustine, FL 32085
904-819-3436

SEMINOLE
Seminole Herald, Legal Advertising
300 North French Avenue
Sanford, FL 32771
407-323-9408

VOLUSIA
News Journal Corporation, Legal Advertising
P. O. Box 2831
Daytona Beach, FL 32120-2831
(386) 681-2322

SPECIAL TOWN COMMISSION - CONCEPTUAL WORKSHOP AGENDA ITEM

REQUESTED SPECIAL COMMISSION MEETING DATE: February 18, 2015

SUBJECT: **Conceptual Presentation for the Citizen's First Bank Drive-Through Facility Major Site Plan- Re Application – MJSP 01/15-004 – A Development Consisting of a 330-square-foot Financial Institution Building with the Provision of a Two-Lane Service Drive-Through Facility proposed at 1105 Caballero Court (Alternate Key 3840565).**

DEPARTMENT: **Growth Management**

STAFF RECOMMENDED MOTION:

Staff recommends advancing the site plan as presented since it meets site specifications as required per Town of Lady Lake Land Development Regulations and the provisions of the Village Downtown Center Memorandum of Agreement.

Applicant, Martin L. Dzuro, on behalf of the Villages Operating Company, has re-submitted a Major Site Plan application for the construction of new Citizen's First Bank-Drive-Through Facility to be located at 1105 Caballero Court, within the Villages Downtown Center in Spanish Springs, identified by alternate key number 3840565. The applicant proposes the construction of a 330-square-foot Financial Institution Building with the provision of a Two-Lane Service Drive-Through Facility. The site plan was reviewed to determine if it is in compliance with the Land Development Regulations (LDRs) including parking, setbacks, landscaping, engineering, environmental protection and commercial design standards.

The subject property is approximately .30+/- acres and is located within The Villages Center Planned Commercial Master Plan also referenced as Spanish Springs. The property is zoned "CP" Planned Commercial which permits development and construction of the proposed facility and is in accordance with the Memorandum of Agreement adopted by the Village Center and the Tri-County Villages Development of Regional Impact (DRI). The requested use is consistent with the directives of the Comprehensive Plan and adopted Land Development Regulations.

Commercial Design Standard

Attached are the site plan and façade elevations for the Citizen's First Bank- Drive-Through Facility:

In accordance with the Land Development Regulations, **Chapter 20, Section 20-3C).3).A)**., new buildings should adopt one of the four recommended architectural styles: Frame Vernacular, Craftsman/Bungalow, Mediterranean, or Mission.

The Citizen's First Bank Drive-Through Facility building features the Mission Architectural Style Design. The building exhibits:

- ✓ Shaped Mission Roof Parapet
- ✓ Drive-through facility supported by large square piers
- ✓ Symmetrical Façade
- ✓ Spanish Tile Roof
- ✓ Stucco Finish on Building Exterior Walls
- ✓ Mission Style Sconce (light fixtures) on facades
- ✓ Wide overhanging eaves
- ✓ Mission-style doors and faux windows

Tree Requirements:

In accordance with Chapter 10-Landscape and Tree Protection, the site is required to provide 48 tree caliper inches based on its .30-acre area (160"x .30). Please see the landscaping tree proposal breakdown:

Existing Trees to remain	48 tree caliper inches
Proposed Canopy	44 tree caliper inches
Proposed Understory & Palms	102 tree caliper inches
Total tree caliper inches	194 tree caliper inches

The applicant is providing significantly more than the required on-site tree caliper inches.

Notes:

- Three (3) oak trees measuring 35", 26", and 20" respectively will be removed; however, the applicant will be preserving an existing 40" Historic oak Tree on the subject parcel.
- The revised plan now utilizes the existing parking lot entrance off of Caballero Court, +/- 200 feet from the intersection of Calle Uno.

Public Meetings:

The **Technical Review Committee** members individually reviewed the application on Thursday, February 5, 2014, and provided outstanding comments regarding the Site Plan application.

The **Town Commission** is tentatively scheduled to consider the Site Plan application on Monday, March 2, 2015 at 6:00 p.m.

FISCAL IMPACT: $0 [ ] Capital Budget

[ ] Operating

[ ] Other

ATTACHMENTS: [ ] Ordinance [ ] Resolution [ ] Budget

[X] Other – Site Plan

[ ] Support Documents/Contracts Available for Review in Manager's Office

2-9-2015

DEPARTMENT HEAD		Submitted 2/9/15	Date
FINANCE DEPARTMENT		Approved as to Budget Requirements	Date
TOWN ATTORNEY		Approved as to Form and Legality	Date
TOWN MANAGER		Approved Agenda Item for: 2/15/15	Date 2/9/15

COMMISSION ACTION: CONSENSUS TO MOVE FORWARD AS PRESENTED. 3-1 (MAYOR RUSSARD)

[ ] Approved as Recommended [ ] Disapproved

[ ] Tabled Indefinitely

[ ] Continued to Date Certain [ ] Approved with Modification

CC: THAD - G.M.

~~Mr. Carroll stated that at this time, the developer is ready to move forward with a proposal to develop the last outparcel (Outparcel M) as a 4,500 sq. ft. communication retail store. Prior to submitting the site plan application, the applicant would like to present the proposal as prepared to date and get the Commission's input. The following information was included in the packet:~~

- ~~Planned Unit Development Memorandum of Agreement of Ord. No. 2006-04~~
- ~~Architectural design exterior building elevations~~
- ~~Conceptual Site Plan (pending, may be complete before the meeting)~~

~~The applicant is expected to submit all applications in accordance with the direction as provided by Town Commission to move forward with the process.~~

~~Mr. Carroll introduced Martin Dellebovi of The Benchmark Group, representing the applicant.~~

~~Mr. Dellebovi introduced himself and reviewed the conceptual plans for Outparcel M. He stated that the buildings for this parcel will incorporate all the same qualities as the other buildings they have built in this plaza to date. He stated that no variances are being requested at this time for signage as a monument sign will be erected on Hwy 27/441 as per code; although the retailer will be looking to have signage at a minimum on two signs of the building and may seek a variance for a sign on a third side if they feel they need that visibility at a later date.~~

~~Mr. Dellebovi stated that they are hoping to start construction sometime around mid-April and hope to turn the building over to the retailer at the end of August, with their opening sometime in November.~~

~~*It was the consensus of the Commission that they were in favor of the Conceptual Presentation for Lady Lake Crossing Outparcel M – Proposing Construction of a 4,500 Sq. Ft. Retail Building – Located at the Southwest Corner of N. Hwy 27/441 and Fennell Blvd. as presented.*~~

~~The original agenda order was then resumed.~~

4. Conceptual Presentation of the Citizen's First Bank Drive-Through Facility Major Site Plan – MJSP 01/15-004 – A Development Consisting of a 330 Sq. Ft. Financial Institution Building with the Provision of a Two Service Lane Drive-Through Facility – Located at 1105 Caballero Court (within The Villages Downtown Center in Spanish Springs (Thad Carroll)

Growth Management Director Thad Carroll gave the background summary from the agenda item cover sheet which is on file in the Town Clerk's office. He stated that the applicant, Martin L. Dzuro, on behalf of The Villages Operating Company, has re-submitted a Major Site Plan application for the construction of a Citizen's First Bank Drive-Through Facility to be located at 1105 Caballero Court, within The Villages Downtown Center in Spanish Springs (Alternate Key #3840565). He stated that the applicant proposes the construction of a 330 sq. ft. financial institution building with the provision a two-lane service drive-through facility. Mr. Carroll stated that the site plan was reviewed to determine if it is in compliance with the Land Development Regulations (LDRs) including parking, setbacks, landscaping, engineering, environmental protection and commercial design standards and was found to be compliant with all LDRs and codes, and staff recommends advancing this site plan for formal consideration.

Mr. Carroll stated that the subject property is approximately .30 +/- acres and is located within The Villages Center Planned Commercial Master Plan, also referenced as Spanish Springs. He stated

the property is currently vacant and is zoned "CP" Planned Commercial which permits development and construction of the proposed facility and is in accordance with the Memorandum of Agreement adopted by the Village Center and the Tri-County Villages Development of Regional Impact (DRI). He stated the requested use is consistent with the directives of the Comprehensive Plan and adopted Land Development Regulations.

Aerial views of the site and sketches of the proposed plans were shown, as were the proposed plantings. Mr. Carroll noted that the applicant has revamped the design to have the entrance come in off of Caballero on the southern side, and that all landscaping will be done in compliance with the codes. He noted three parking spaces will be removed as part of the application to allow for the turn radius for the drive-through.

Commercial Design Standards - The site plan and façade elevations for the Citizen's First Bank-Drive-Through Facility were included in the packet.

In accordance with the Land Development Regulations, Chapter 20, Section 20-3C).3).A)., new buildings should adopt one of the four recommended architectural styles: Frame Vernacular, Craftsman/Bungalow, Mediterranean, or Mission.

Mr. Carroll noted that the Citizen's First Bank Drive-Through Facility building features the Mission Architectural Style Design. The building exhibits:

- ✓ Mission shaped roof parapet
- ✓ Drive-through facility supported by large square piers
- ✓ Symmetrical façade
- ✓ Spanish tile roof
- ✓ Stucco finish on building exterior walls
- ✓ Mission style sconce (light fixtures) on facades
- ✓ Wide overhanging eaves
- ✓ Mission style doors and faux windows

Tree Requirements: In accordance with Chapter 10-Landscape and Tree Protection, the site is required to provide 48 tree caliper inches based on its .30-acre area (160"x .30). The landscaping tree proposal breakdown is as follows:

Existing trees to remain	48 tree caliper inches
Proposed canopy	44 tree caliper inches
Proposed understory & palms	102 tree caliper inches
Total tree caliper inches	194 tree caliper inches

The applicant is providing significantly more than the required on-site tree caliper inches.

Mr. Carroll noted that three oaks trees measuring 35 inches, 26 inches, and 20 inches respectively will be removed; however, the applicant will be preserving an existing 40" historic oak tree on the subject parcel.

Mr. Carroll stated the application was received on January 15, 2015. The Technical Review Committee members individually reviewed the application on Thursday, February 5, 2014, and provided outstanding comments regarding the Site Plan application. The Town Commission is tentatively scheduled to consider the Site Plan application on Monday, March 2, 2015 at 6:00 p.m.

DRAFT

Mr. Carroll stated that Martin Dzuro as applicant is present, as is Jeff Head as engineer, if there are any questions.

Commissioner Holden commented that he is not enthused about this project and thinks there could be a better location for it. He stated the residents are not happy about losing some of the green space in this area.

- Ken Kincaid of 1402 Plantation Dr. asked how many parking spaces will be lost. He stated he is concerned about parking in the area and suggested adding more drive-through lanes to the other bank site down the street instead.

Mr. Carroll replied that three parking spaces will be lost and that parking is spread out in a variety of areas for the commercial center and is considered adequate as per the requirements of the town center.

Marty Dzuro of The Villages Operating Company commented that the whole town center of Spanish Springs is an aggregate parking area and they keep close tabs on the required number and provided number of parking with each plan submitted. He stated there is an excess of parking spaces at this time for the aggregate parking, and that many people consider there is not enough parking because it is not as close to the door they want to go to. Mr. Dzuro stated they believe that the drive-through will alleviate the need for some parking at this bank site.

Mr. Dzuro also commented on the green space, stating that the trees they are removing are diseased and they will be planting even more, and will be saving the large historic tree. He also stated that this is a commercial building area and was always proposed as such, and although it was nice that folks could use this as open space in the interim, it was always proposed for development and will continue to have green space around it.

Mr. Dzuro stated that the Commission expressed concerns regarding the traffic entering near the intersection on Caballero on the first submittal of plans for this drive-through facility. He stated it was suggested at that time that the entrance be moved and have it come through the parking lot off of Caballero, and this worked out well using two drive-through lanes. Mr. Dzuro stated there have been no variances requested and all codes have been met with this re-submittal.

It was the consensus of the Commission that they were in favor of advancement of the conceptual presentation of the Citizen's First Bank Drive-Through Facility Major Site Plan – MJSP 01/15-004 – A Development Consisting of a 330 Sq. Ft. Financial Institution Building with the Provision of a Two Service Lane Drive-Through Facility as presented by a vote of 3-1 (Kussard).

Mayor Kussard stated that she has heard from so many residents who are opposed to this, and as a result, is opposed to this plan.

6. ~~Conceptual Presentation for the Sawmill Holdings, LLC Site – Proposing an RV Park Consisting of 185 Units – Located off of Hartsock Sawmill Road; Approximately 1,490 Lineal Feet East of the Intersection of S. Hwy 27/441 (Thad Carroll)~~

~~Growth Management Director Thad Carroll gave the background summary from the agenda item cover sheet which is on file in the Town Clerk's office. He stated that the applicant, Greg Beliveau with LPG Urban & Regional Planners, on behalf of property owner, Sawmill Holdings, LLC, would~~

VILLAGE CENTER DOWNTOWN PARKING ALLOCATION

January 15, 2015

911/Tract Number	Site	Building Use	Parking Required (Villages)	Parking Provided	Sq.Ft.	Seating/Rooms	Employee	Handicap Parking Req.
*	**Shops of Spanish Springs**			389				8
1169	PATCHINGTON	GENERAL RETAIL	8		1,500	n/a	n/a	
1171	ALL THINGS FINE	GENERAL RETAIL	8		1,500	n/a	n/a	
1173	BERMUDA BAY	GENERAL RETAIL	8		1,602	n/a	n/a	
1175	ALL OCCASIONS EVENTS	GENERAL RETAIL	16		3,102	n/a	n/a	
1179	PANERA	RESTAURANT	0		1,500	n/a	n/a	
1181	PANERA	RESTAURANT	66		4,528	182	10	
1150	**Spanish Springs Station**	OFFICE	9		1,629	n/a	n/a	
*	**P.B. Smythe Building**							
1002	DUNKIN DONUTS	RESTAURANT	13		1,496	32	4	
1001	LUIGINO'S RESTAURANT	RESTAURANT	67		6,449	180	14	
1105	VACANT	N/A	7		1,280	n/a	n/a	
1109	TERVIS TUMBLER	GENERAL RETAIL	4		795	n/a	n/a	
1113	SOMA INTIMATES	GENERAL RETAIL	16		3,140	n/a	n/a	
1121	COZCO	GENERAL RETAIL	9		1,800	n/a	n/a	
1129	CITIZENS FIRST BANK	OFFICE	28		5,543	n/a	n/a	
	VILLAGES OFFICE	OFFICE	102		20,210	n/a	n/a	
1129	**Citizens First Bank Drive Thru**	OFFICE	2		330	n/a	n/a	1
*	**LaSalle Building**							
	WORLD OF BEER	RESTAURANT	74		5,400	n/a	n/a	
*	**Seeley Building**							
986	FLIPPERS PIZZERIA	RESTAURANT	19		1,479	110	10	
988	VACANT	N/A	5		979	n/a	n/a	
990	ORECK	GENERAL RETAIL	5		979	n/a	n/a	
992	FY EYE OPTICAL	MEDICAL OFFICE	7		1,212	n/a	n/a	
*	**El Mercado Building**			509				11
1152	AY! JALISCO	RESTAURANT	62		1,500	170	10	
1154	AY! JALISCO	RESTAURANT	0		1,602	n/a	n/a	
1156	PICTURE YOU	GENERAL RETAIL	12		6,000	n/a	n/a	
1162	GOLF USA	GENERAL RETAIL	9		1,629	n/a	n/a	
1168	RUBY TUESDAY	RESTAURANT	75		4,555	201	16	
*	**Citrus Exchange Building**							
1102	MARGARITA REPUBLIC	RESTAURANT	31		4,589	80	8	
1104	MARGARITA REPUBLIC	RESTAURANT	0		0	n/a	n/a	
1106	VICTORIA'S ESTATE JEWELRY	GENERAL RETAIL	5		876	n/a	n/a	
1108	KILWINS CHOCOLATES & ICE CREAM	RESTAURANT	18		1,834	48	4	
1110	THE KINGS GALLERY	GENERAL RETAIL	10		1,965	n/a	n/a	
1112	TURTLE BAY CLOTHING COMPANY	GENERAL RETAIL	10		1,965	n/a	n/a	
1120	VILLAGES SALES	OFFICE	66		13,101	n/a	n/a	
2ND Floor	DAILY SUN	OFFICE	92		18,358	n/a	n/a	
1051	**Church on the Square**	HOUSE OF WORSHIP	351		53,681	1052	n/a	
*	**Van Patton House**			698				15
992	CHICO'S	GENERAL RETAIL	16		3,060	n/a	n/a	
994	ATHENS NY RESTAURANT	RESTAURANT	37		1,758	98	8	
995	PRO-SHOP	GENERAL RETAIL	6		1,078	n/a	n/a	
996	KATIE BELLE'S FIRST FLOOR	RESTAURANT	166		11,139	450	32	
996	KATIE BELLE'S SECOND FLOOR	RESTAURANT	0		11,254	n/a	n/a	
996	KATIE BELLE'S GREEN ROOM	N/A	0		884	na	n/a	
997	SPANISH SPRINGS LANES	BOWLING ALLEY	128		27,778	32 lanes	n/a	
998	HOSPITALITY	OFFICE	12		2,290	n/a	n/a	
999	McCALL's TAVERN	RESTAURANT	46		2,324	120	12	
	McCALL's TAVERN KITCHEN	KITCHEN	0		1,419	n/a	n/a	
	RESTROOMS	RESTROOMS	0		622	n/a	n/a	
*	**H.G. Seymour**							
970	SPECIAL EVENTS OFFICE	OFFICE	9		1,800	n/a	n/a	
972	SERENITY DENTAL SPA	MEDICAL OFFICE	9		1,800	n/a	n/a	
974	CURVES	HEALTH SERVICES	18		1,800	n/a	n/a	
976	CAL'S BARBER SHOP	PERSONAL SERVICES	13		1,800	n/a	n/a	
978	INTEGRE FIRST	OFFICE	9		1,800	n/a	n/a	
980	FOOT SOLUTIONS	GENERAL RETAIL	9		1,800	n/a	n/a	
982	VIVA NAILS AND SPA	PERSONAL SERVICES	10		1,500	n/a	n/a	
990	TOO JAY'S	RESTAURANT	75		5,570	202	15	
1105	**El Rialto**	MOVIE THEATER	419	754	23,549	1235	7	16
*	**La Reina De Spanish Springs**							
973	VILLAGES INSURANCE	OFFICE	8		1,569	n/a	n/a	
975	US HEARING AID CENTERS	MEDICAL OFFICE	9		1,502	n/a	n/a	
977	APRIA HEALTHCARE	MEDICAL OFFICE	9		1,534	n/a	n/a	
979	BETTER LIFE CHIROPRACTIC & WELLNESS	MEDICAL OFFICE	14		2,462	n/a	n/a	
981	MEDIFAST WEIGHT CONTROL CENTERS	MEDICAL OFFICE	10		1,813	n/a	n/a	
990	HERTZ CAR RENTAL	OFFICE	4		701	n/a	n/a	
ALL 3 FLOORS	MVP ATHLETIC CLUB	HEALTH SERVICES	174		17,449	n/a	n/a	
ALL 3 FLOORS	MVP ATHLETIC CLUB	OFFICE	136		27,114	n/a	n/a	
2ND & 3RD FLOORS	OFFICES	OFFICE	110		21,817	n/a	n/a	
1004	GATOR'S DOCKSIDE	RESTAURANT	57		5,961	150	14	
*	**Townplace Suites**	HOTEL	121		67,729	119	20	
*	**Town Square**	N/A	0	81	n/a	n/a	n/a	0
S	**CVS**	RTL:GROCERY & DRUG	56	62	11,200	N/A	N/A	3
W	**FIESTA BOWL**	BOWLING/RESTAURANT	167	178	31,327	32 lanes/100 seats	11	6
X	**THE VILLAGES GOLF CAR SHOP**	SERVICE	20	22	6,709	N/A	N/A	2
Q-R	**PERKINS**	RESTAURANT	66	76	5,770	168	20	3
P-Q	**AAA AUTO CLUB**	OFFICE	47	79	9,398	N/A	N/A	2
T-b	**SEDONA CAR WASH**	CAR WASH	5	24	6,400	N/A	N/A	1
O	**K.F.C. / TACO BELL / PIZZA HUT**	RESTAURANT	37	63	3,545	96	10	2
N	**BURGER KING**	RESTAURANT	32	36	4,290	80	10	2
M	**APPLEBEE'S**	RESTAURANT	60	82	4,738	176	20	3
L	**WENDY'S**	RESTAURANT	37	53	3,313	96	10	2
E-a	**VETERANS WAR MEMORIAL**	N/A	0	0	N/A	N/A	N/A	0
Z	**LA HACIENDA RECREATION CENTER**	RECREATION CENTER	261	231	26,045	N/A	N/A	7
Y	**LA HACIENDA HOTEL** - *2 STORY*	HOTEL	48	57	34,296	48 rooms	0	2
C	**LA HACIENDA SPORTS COMPLEX**	RECREATION CENTER	117	143	525	N/A	N/A	1
Y	**HOLIDAY INN EXPRESS** - *3 STORY*	HOTEL	81	89	46,296	80 rooms	8	4
T-a, T-b, U	**LA PLAZA GRANDE SOUTH PH 1-5 & BELK EXP.**	SHOPPING CENTER	1103	1277	263,939	N/A	N/A	20
T-b, J	**LA PLAZA GRANDE WEST PH 1 & 2**	SHOPPING CENTER	321	389	68,064	N/A	N/A	7
V	**VILLAGE GREEN**	OFFICE	45	56	8,940	N/A	N/A	2
B	**ST. GEORGE EPISCOPAL CHURCH**	HOUSE OF WORSHIP	134	148	11,318	400	N/A	5
A	**COMFORT SUITES** - *3 STORY*	HOTEL	81	85	48,531	80 rooms	10	4
A	**CHILI'S**	RESTAURANT	83	116	5,698	217	20	4
T-c	**TITAN SENIOR LIVING**	ASSISTED LIVING	64	64	33,975	50 ALF/36 MC	N/A	3

Total Parking Provided	5761	Total HC Parking Provided	206
Total Parking Required	5713	Total HC Parking Required	136
Excess Parking Provided	**48**	**Excess HC Parking**	**70**
	Standard		Handicap

KEYED NOTES

1. RAISED PARAPET CAP, REFER TO SECTIONS SHEET A402
2. CONC. "SPANISH" TILE ROOFING ON UNDERLAYMENT PER MANUFACTURER
3. ⅞" STUCCO OVER METAL LATH
4. LIGHT FIXTURE, REFER TO ELECTRICAL DRAWINGS
5. 'RESINKAST' HIGH DENSITY CAST RESIN "LOG" BY O.T.B. ARCHITECTURAL PRODUCTS OR EQUAL
6. 2"x8" "RESINKAST" FAUX WOOD TRIM TOP AND BOTTOM OF FALSE SHUTTERS & TOP OF EXTERIOR DOORS.
7. 'RESINKAST' HIGH DENSITY CAST RESIN "RAFTER TAIL" BY O.T.B. ARCHITECTURAL PRODUCTS OR EQUAL
8. 6" DIA. HALF ROUND GUTTER AND 3" DIA. MATCHING DOWNSPOUT PER OWNERS MATERIAL SELECTIONS
9. CONC. ISLAND AND STEEL BOLLARDS, REFER TO SECTION SHEETS A401 & A402
10. PNEUMATIC BANK EQUIPMENT BY OTHERS AND INSTALLED BY G.C.
11. DECOR SHUTTERS PER DETAIL...

NOTE:
SLAB AND BEARING ELEVATIONS LISTED ARE BASED ON AN ASSUMED TOP OF SLAB ELEVATION OF 100.00'. REFER TO CIVIL ENGINEERING DRAWINGS FOR ACTUAL TOP OF SLAB ELEVATIONS.

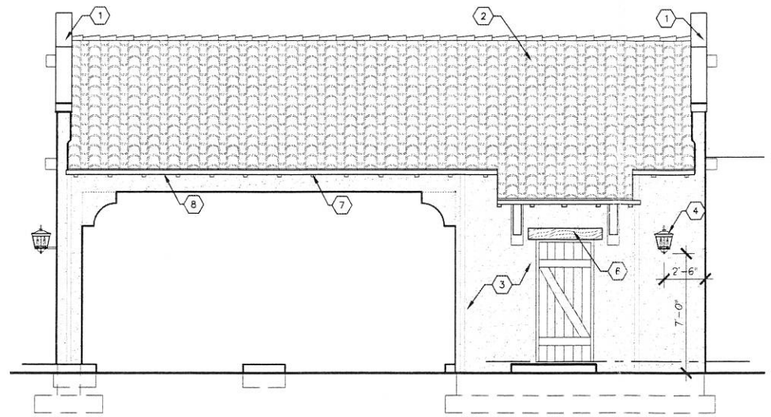

EAST ELEVATION
1/4" = 1'-0"

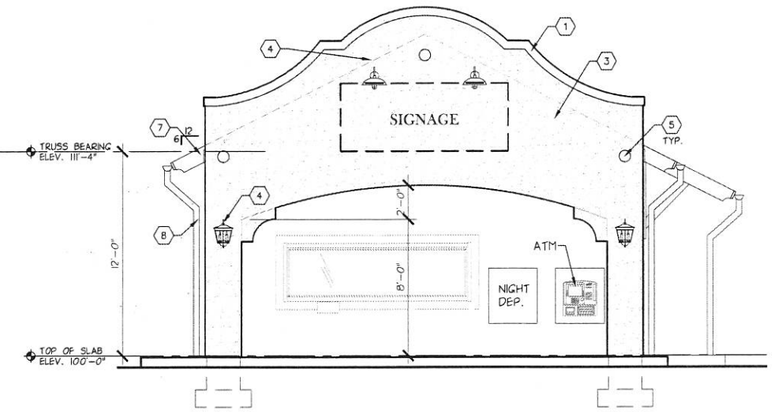

SOUTH ELEVATION
1/4" = 1'-0"

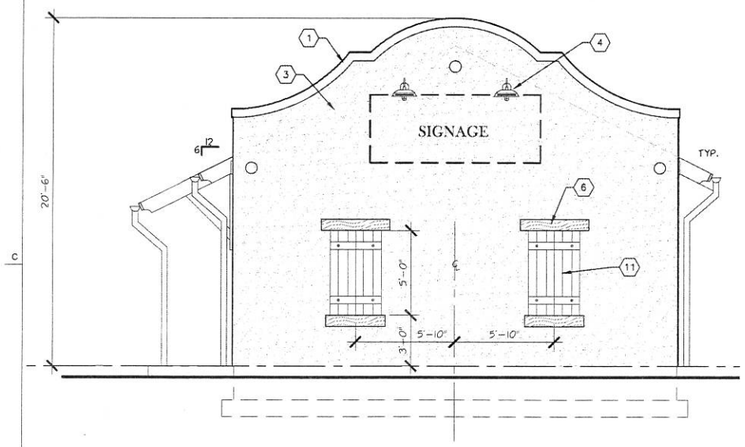

NORTH ELEVATION
1/4" = 1'-0"

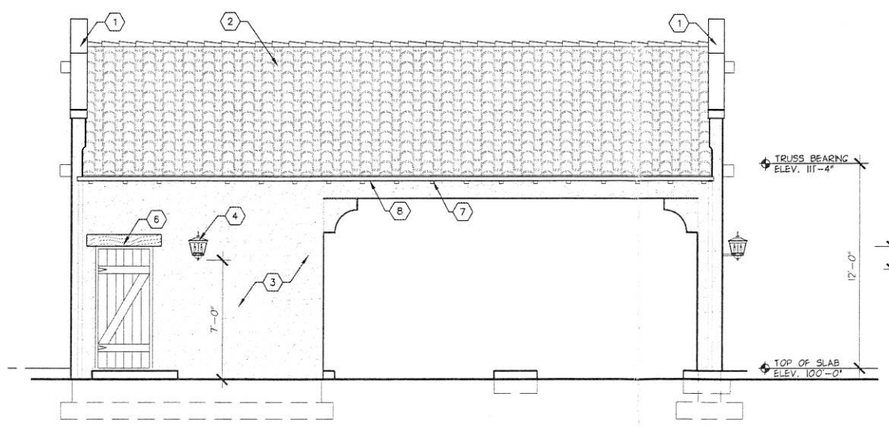

WEST ELEVATION
1/4" = 1'-0"

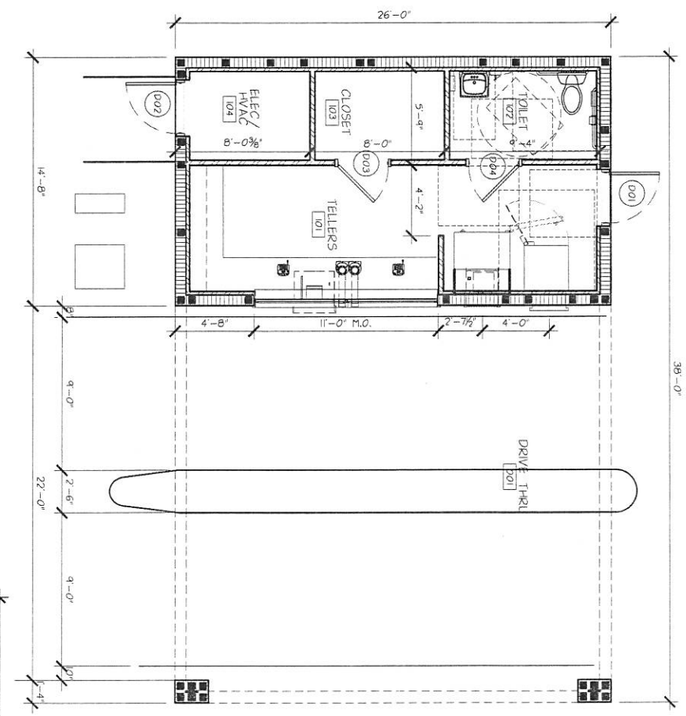

FLOOR PLAN
1/4" = 1'-0"

JAN 1 4 2015

kp studio architect
KP STUDIO ARCHITECT P.A.
537 NE 8th Avenue
Ocala Florida 34470
Phone: 352.622.7163
Fax: 352.622.6556
mailbox@kpstudioarchitect.com
Web site: kpstudioarchitect.com
License No. #AA0002357
CONSULTANT

PROJECT

CITIZENS FIRST BANK DRIVE THRU TELLER AT SPANISH SPRINGS TOWN SQUARE
THE VILLAGES
LADY LAKE, FLORIDA

SEAL

REGISTRATION
LICENSE NUMBER AR0016784
JAMES ANDREW COPELAND

MARK	DATE	DESCRIPTION	BY
1			

REVISIONS

DRAWN BY:	DM
CHECKED BY:	ERP
DATE:	12-23-2014

SHEET:
EXTERIOR ELEVATIONS
A-301
JOB No. 14062

Written dimensions on these drawings shall have precedence over scaled dimensions. Contractor shall verify and be responsible for all dimensions and conditions shown on these drawings. Field verify all conditions prior to buying out or fabricating associated work. Bring to the architect's attention any discrepancy from designed conditions and field conditions prior to ordering materials and/or commencement of fabrication. Shop drawings shall be reviewed by the contractor prior to submittal to the architect. Review by the architect shall be for general conformance with the design concept only. Contractor is responsible for all dimensions, quantities and coordination of all trades. Shop drawings shall be submitted through the contractor. Shop drawings submitted by any other entity will not be reviewed. Review of shop drawings does not relieve the contractor of responsibility for errors or omissions in shop drawings. These documents are not to be reproduced, changed, or copied in any form or manner whatsoever, nor are they to be assigned to a third party without first obtaining the written permission and consent of KP Studio Architect P.A. for such use in an amount equal to the original fee for the original document, plus legal fees, court costs, collection fees and other costs.

NOTES:
Any damage to any existing landscaping or irrigation on adjacent sites caused by any aspect of the construction of this project shall be restored immediately to acceptable conditions, as determined by MPA.

IRRIGATION MAINTENANCE:

1. THE IRRIGATION SYSTEM SHALL BE OPERATED, INSPECTED, AND ADJUSTED ANNUALLY BY A QUALIFIED PROFESSIONAL TO ENSURE THE SYSTEM IS FUNCTIONING WITHIN DESIGN PARAMETERS. WHENEVER AREAS OF PLANT MATERIAL DISPLAY DROUGHT STRESS, THE SYSTEM SHALL BE INSPECTED AND REPAIRED IF MALFUNCTION IS THE CAUSE.
2. IRRIGATION USING MICRO-SPRAY (TREE ZONES) MAY BE RUN ANY TIME.
3. IRRIGATION OF NEW LANDSCAPE IS ALLOWED AT ANY TIME OF THE DAY ON ANY DAY FOR THE INITIAL 30 DAYS, AND ON EVERY OTHER DAY FOR THE NEXT 90 DAYS.
4. 3" OF PINE STRAW MULCH SHALL BE REAPPLIED ONCE PER YEAR, OR AS NEEDED.
5. ALL LANDSCAPE AREAS, INCLUDING SOD, TREES, SHRUBS AND GROUNDCOVERS SHALL BE FERTILIZED TWICE PER YEAR.
6. WEEDING AND MOWING SHALL BE PERFORMED AS NEEDED AS PART OF ROUTINE MAINTENANCE.
7. PRUNING SHALL BE PERFORMED AS NEEDED AS PART OF ROUTINE MAINTENANCE TO MAINTAIN THE DESIGN INTENT AND THE HEALTH OF THE PLANT MATERIAL.

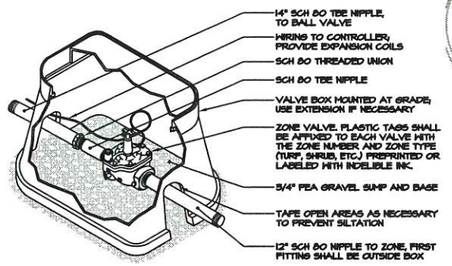

INSTALL TOP OF VALVE A MAXIMUM OF 5" FROM FINISHED GRADE.
INSTALL REDUCERS AND ALL-THREAD AS NECESSARY AT EACH VALVE LOCATION.
INSTALL EACH VALVE TAP IN A VERTICAL ORIENTATION TO ASSURE THE PROPER VALVE DEPTH.

ZONE VALVE
SCALE: N.T.S.

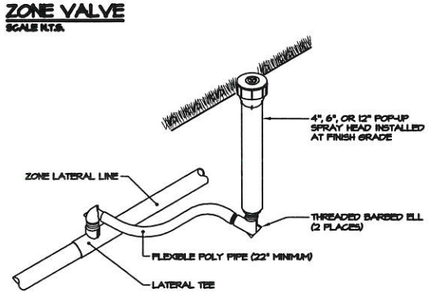

SPRAY HEAD INSTALLATION
SCALE: N.T.S.

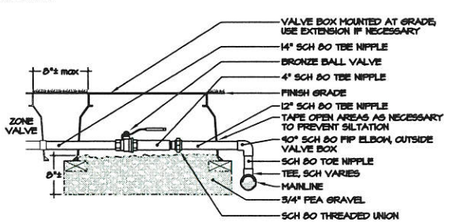

BALL VALVE
SCALE: N.T.S.

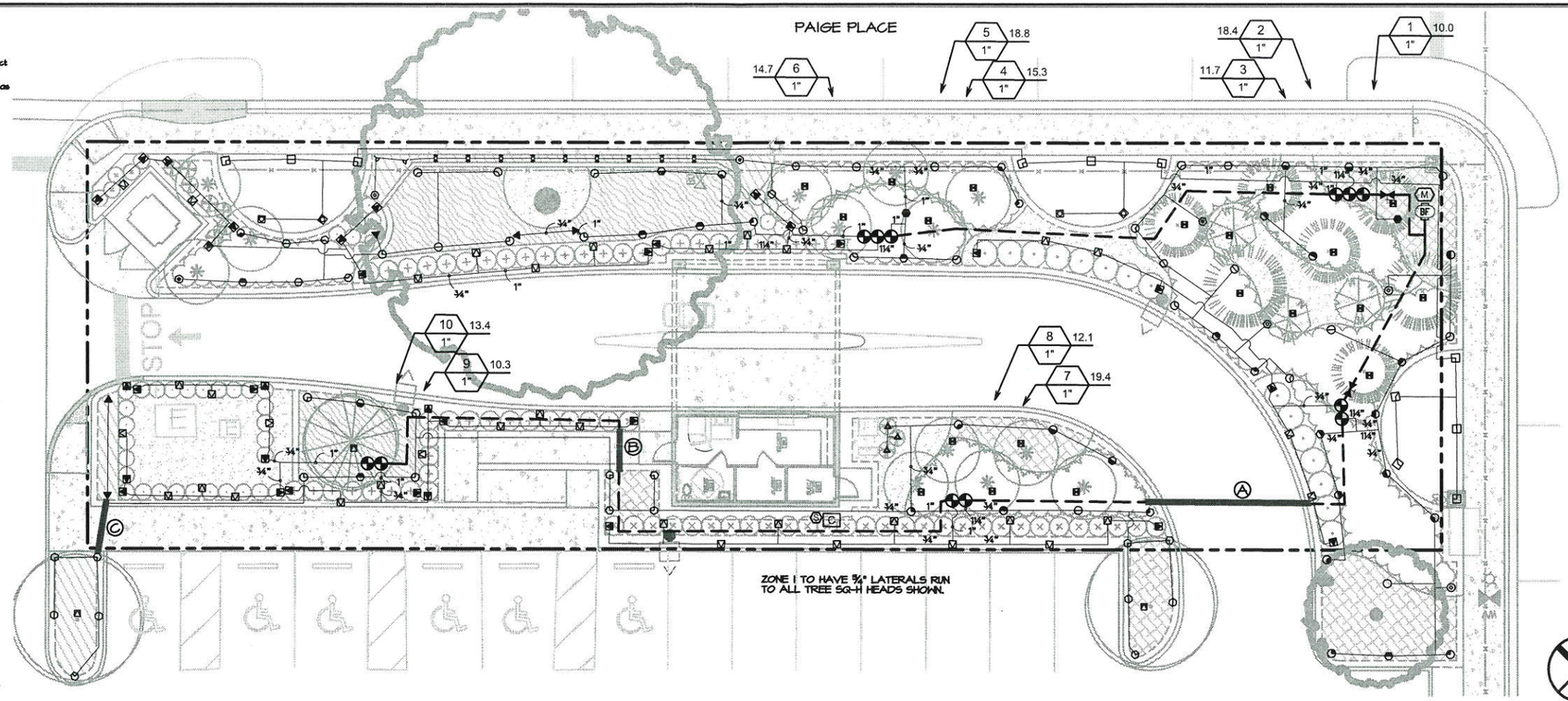

SCALE: 1"=10'

Valve Callout: #1 Valve Number; # Valve Flow; #" Valve Size

IRRIGATION SPECIFICATIONS

1. The Contractor shall be entirely responsible for proper coverage and operation of the system. The Contractor shall be responsible for getting all locates and for any repairs to existing improvements damaged by his work.
2. The Contractor shall be responsible for providing all labor, material, and accessories required for a complete and properly operating irrigation system meeting the performance requirements outlined herein prior to installation, submittals shall be provided for approval by the Landscape Architect, including cutsheets for all irrigation components.
3. All irrigation components shall be installed in accordance with the manufacturer's specifications. No components of the irrigation system shall be installed outside of the property limits.
4. All work shall be installed in accordance with the regulations of the local, county, or other governing authorities. Fees for all permits, inspections, and impact fees shall be included as work required.
5. The water source shall be the 3/4" Irrigation Meter at the corner of Paige Place and Caballero Court.
6. The controller shall be Hunter or Rainbird and mounted in an unobstructed location. Confirm location for controller and rain sensor with the Owner. The controller shall be hardwired, not plugged into a receptacle.
7. 2 spare control wires shall be run from the controller both clockwise and counterclockwise to the farthest valves. These 4 spare wires shall be tagged and labeled as such, and coiled neatly in the respective valve boxes.
8. All PVC pipe in the system shall be purple Class 160 IPS Polyvinyl Chloride solvent weld pipe conforming to the ASTM-D2241, Type I, requirements, NSF approved, unless otherwise noted.
9. Flexible pipe connections to gear-driven and spray heads shall be approved flexible pipe (funny pipe), threaded into a barb x thread PVC fitting. Length of funny pipe shall be at least 6" longer than the depth of the zone lateral and a minimum of 22". Kat-flex and glued connections may be acceptable with approval by the Landscape Architect prior to bidding.
10. The use of barbed insertion type fittings (couplings, tees, ells, etc.) between the sprinkler and the PVC service is prohibited.
11. Drip irrigation and risers are prohibited.
12. All PVC fittings shall be purple Schedule 40, Type I, NSF approved conforming to the ASTM-D2466 requirements.
13. Ball valves 2 inches and smaller shall meet Federal Specification WW-V-54 Type I, Class A. Valves shall be threaded, bronze, rough bodied, and have finished trimmings. Ball valves shall be Nibco T-580-70-LC or approved equal.
14. Separation of zones covering turf areas and bed areas shall be required, even where such areas are spray zones. All trees shall have coverage provided by a separate zone, using Maxijets, or by using Hunter APB adjustable flood bubblers on a rotor zone. Zones shall be properly balanced.
15. Gate valves 2 inches and over in size shall be resilient-seat with cast iron bodies meeting AWWA C509 - latest. Valves shall have either threaded or mechanical joint connections, non-rising stems, and 2" square operating nuts. Resilient-seated gate valves shall be American-Darling CRS 80, Kennedy 1500 Series, Clow F6105, or approved equal.
16. The remote control valves shall be Hunter or Rainbird. All valves shall be installed in a rectangular Ametek-type valve box, amply sized for access. Valves shall be placed in unobtrusive turf areas rather than bed areas. All valve box covers shall be branded with a heat branding kit with two inch letters/numbers to identify their respective components and zone designations (as applicable). All valves shall be labeled with plastic tags with the zone designations either preprinted or labeled with indelible ink. Refer to the Details for additional installation requirements.
17. A rain sensor, Mini-Clik II, or approved equal, shall be installed in an unobstructed location per the manufacturer's specifications.
18. All PVC piping shall be installed in the trenches with a minimum of 12" of cover, and a maximum of 24", except where specific permission is obtained from the Landscape Architect for less cover due to existing conditions. Trenches shall be fully compacted to allow no settling. Hand trenching and alternative routing of piping may be required to preserve roots of existing trees when encountered. Coord with MPA as needed.
19. Any pipe installed and subsequently removed shall not be reinstalled.
20. There shall be no or minimal overspray onto walkways, and there shall be no overspray onto buildings, walls, or structures. Adjustable heads shall be used where possible for this purpose.
21. 100% overlapping head-to-head coverage shall be required in all areas requiring spray and rotor coverage, as reasonably possible.
22. The Contractor shall be responsible for adjusting and balancing the system for proper operation and coverage, including moving heads, changing head size, or nozzle, etc. The Landscape Architect shall have the right to inspect the work to insure that the system conforms with the specifications, as a condition for final payment to the Contractor.
23. All lines being tested shall be subjected to 150 psi pressure and maintained for at least 2 hours with no loss of pressure. Any defects or leaks revealed will be located and repaired and another pressure test run before backfilling.
24. Warranty: The Contractor shall warrant the installation workmanship for a period of one year from date of completion and acceptance of the job. The Contractor shall further see to the fulfillment of all manufacturer's warranties and shall provide manufacturer warranty and operational information to the Owner. Reproducible as-builts copied from the original plan showing dimensioned locations of all system components shall be required for final payment.

VALVE SCHEDULE

NUMBER	MODEL	SIZE	TYPE	GPM
1	Hunter SRV	1"	Trees	10.0
2	Hunter SRV	1"	Shrub Spray	18.4
3	Hunter SRV	1"	Turf Spray	11.7
4	Hunter SRV	1"	Shrub Spray	15.3
5	Hunter SRV	1"	Shrub Spray	18.8
6	Hunter SRV	1"	Shrub Spray	14.7
7	Hunter SRV	1"	Shrub Spray	19.4
8	Hunter SRV	1"	Shrub Spray	12.1
9	Hunter SRV	1"	Shrub Spray	10.3
10	Hunter SRV	1"	Shrub Spray	13.4

IRRIGATION SLEEVING LEGEND

Ⓐ = (1) 4" SLEEVE (2) 2" SLEEVES
Ⓑ = (1) 4" SLEEVE (3) 2" SLEEVES
Ⓒ = (2) 2" SLEEVE

48 HOURS BEFORE YOU DIG
CALL SUNSHINE
1-800-432-4770
IT'S THE LAW IN FLORIDA

Crawford Irrigation Design, Inc.
IRRIGATION DESIGN AND CONSULTATION SERVICES
Edgewater, Florida
Tel: (386)-424-0027
EMAIL: CID@Atlantic.net

IRRIGATION SCHEDULE

SYMBOL	MANUFACTURER/MODEL	ARC	PSI	GPM	RADIUS
	Rain Bird 1806-PRS 15 Strip Series	EST	30	0.61	4'x15'
	Rain Bird 1806-PRS 15 Strip Series	SST	30	1.21	4'x30'
	Rain Bird 1806-PRS 10 Series MPR	120	30	0.53	10'
	Rain Bird 1806-PRS 12 Series MPR	180	30	1.30	12'
	Rain Bird 1806-PRS 12 Series MPR	90	30	0.65	12'
	Rain Bird 1806-PRS 12 Series MPR	120	30	0.87	12'
	Rain Bird 1812-PRS 15 Strip Series	EST	30	0.61	4'x15'
	Rain Bird 1812-PRS 5 Series MPR	90	30	0.10	5'
	Rain Bird 1812-PRS 8 Series MPR	180	30	0.52	8'
	Rain Bird 1812-PRS 8 Series MPR	90	30	0.26	8'
	Rain Bird 1812-PRS 8 Series MPR	120	30	0.35	8'
	Rain Bird 1812-PRS 10 Series MPR	360	30	1.58	10'
	Rain Bird 1812-PRS 10 Series MPR	180	30	0.79	10'
	Rain Bird 1812-PRS 10 Series MPR	90	30	0.39	10'
	Rain Bird 1812-PRS 10 Series MPR	120	30	0.53	10'
	Rain Bird 1812-PRS 12 Series MPR	360	30	2.60	12'
	Rain Bird 1812-PRS 12 Series MPR	180	30	1.30	12'
	Rain Bird 1812-PRS 12 Series MPR	90	30	0.65	12'
	Rain Bird 1812-PRS 12 Series MPR	120	30	0.87	12'
	Rain Bird 1812-PRS 15 Series MPR	180	30	1.85	15'
	Rain Bird 1812-PRS 15 Series MPR	90	30	0.92	15'
	Rain Bird 1812-PRS 15 Series MPR	120	30	1.23	15'
	Rain Bird 1812-PRS 12 Series HE VAN	Adj	30		12'
	Rain Bird 1812-PRS 8 Series VAN	Adj	30		8'
	Rain Bird 1812-PRS 10 Series VAN	Adj	30		10'
	Rain Bird 1806-PRS 5 Series Stream	180	30	0.50	1'x10'
	Rain Bird 1401 Bubbler	360	30	0.25	1'
	Rain Bird 1806-PRS w/Rain Bird SQ 2.5 H	180	30	0.20	2.5'
	Two Rain Bird 1806-PRS w/Rain Bird SQ 2.5 H	180	30	0.20	2.5'

SYMBOL	MANUFACTURER/MODEL/DESCRIPTION
	Rain Bird 100HVF in 12" Valve Box
	Nibco T-113 1-1/2" in 10" Valve Box
C	Rain Bird ESP-12LXME 12 Station Controller
S	Rain Bird RSD Rain Sensor
M	Existing Water Meter 3/4" and Backflow Preventer
	Irrigation Lateral Line: PVC Class 160
	Irrigation Mainline: PVC 1-1/2" Class 160
	Irrigation Sleeve: PVC Schedule 40 see schedule

IMPORTANT! NOTICE TO CONTRACTORS:
This project is within the jurisdiction of The Villages. Bidding on these landscape plans is subject to mandatory procedures under The Villages' design review authority. Bidding shall occur only under direction of The Villages' Design Review Committee to insure that all requirements have been met. Bids solicited, awarded or received otherwise will not be qualified bids.
Details about this process shall be obtained by contacting Michael Pape & Associates PA.

REVISIONS
DATE

MPA
MICHAEL PAPE & ASSOCIATES, P.A.
LAND PLANNING • SITE DESIGN • LANDSCAPE ARCHITECTURE
2351 S.E. 17TH STREET • OCALA, FLORIDA 34471 • (352) 351-3500

CITIZENS FIRST BANK DRIVE THRU
SPANISH SPRINGS TOWN CENTER
The Villages
IRRIGATION PLAN

DATE 01/13/15
JOB NO. 2045
DWG. NO. 2045
DWN. BY JCR
CHKD. BY SS

SHEET 1 OF 1

IR-1

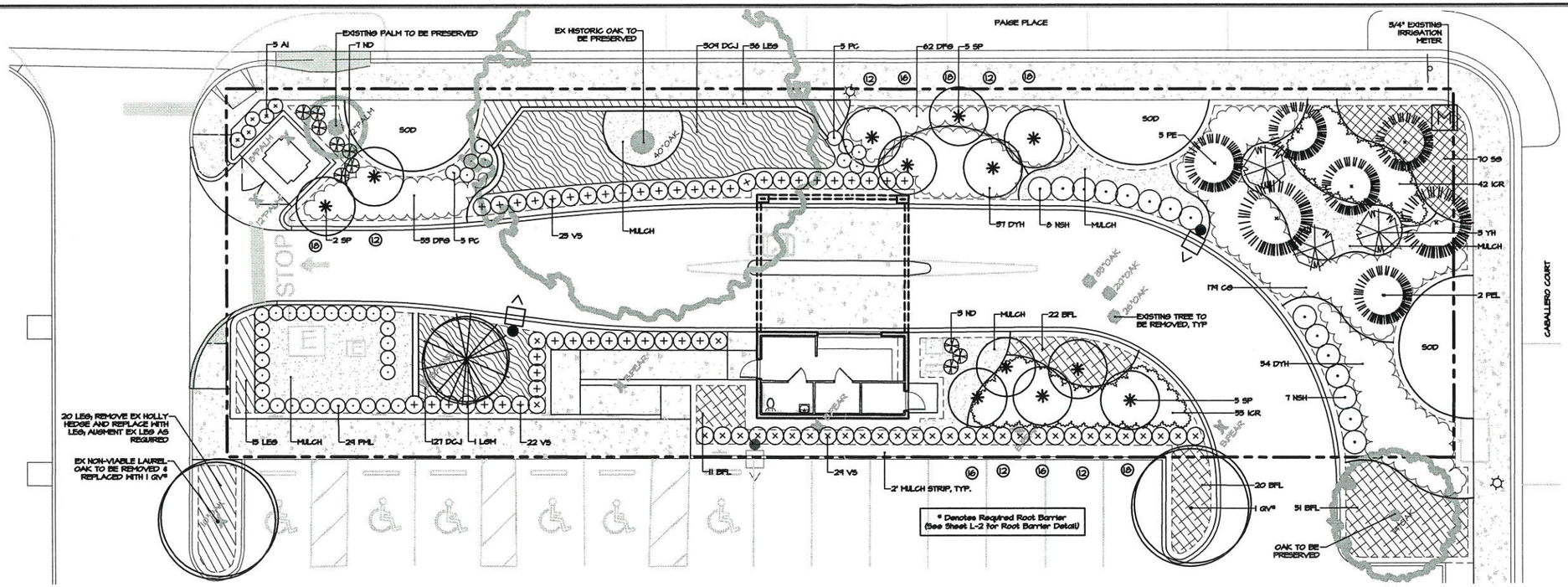

NOTES:
Any damage to any existing landscaping or irrigation on adjacent sites caused by any aspect of the construction of this project shall be restored immediately to acceptable conditions, as determined by MPA.

LANDSCAPE SPECIFICATIONS

1. The Contractor shall be responsible for getting all locates and for any repairs to existing improvements damaged by his work.
2. All plants shall be Florida No. 1 or better, as outlined under Grades and Standards for Nursery Plants, Division of Plant Industries, State of Florida, current edition.
3. All work shall be performed in accordance with standard and accepted nursery practices in a workmanlike manner; the Contractor shall be responsible for notifying the Landscape Architect of any conditions which would adversely affect the completed work.
4. The Contractor shall be responsible for fine grading, ±1", in all areas of the site to be landscaped. The Contractor is responsible for ensuring that surface drainage is not affected or hindered in any manner due to any reason.
5. The Contractor shall be responsible for the thorough removal of existing vegetation and grass in the areas to be planted, including application(s) of appropriate herbicides before and after plant installation. A pre-emergent herbicide approved by the Landscape Architect shall be applied in accordance with the manufacturer's instructions for all plant beds.
6. Limerock, debris, and other unsuitable materials shall be removed from the planting areas, and clean sandy fill used to bring all areas to proper grade. Soil used for planting shall consist of two parts of the existing soil and one part domestic peat moss (or sandy fill in heavy soils). Fertilizer shall be Agriform tablets, incorporated into all shrub and tree planting pits per the manufacturer's instructions. Backfill shall consist of equal parts clean sandy fill and potting soil mix, well mixed.
7. Refer to the Details for plant installation requirements. Care shall be taken to insure that all plants are set properly and the finish grade conforms to adjacent lawns, walks, pavement, etc. All plant beds shall be top-dressed with 3" pine straw mulch.
8. The Landscape Architect reserves the right to field locate or review flagged locations of any or all proposed plantings. Locations of trees and plants shall be coordinated with irrigation head locations to insure proper coverage, including minor adjustments of plant and head locations as needed.
9. Sod shall be clean, weed-free Zoysia 'Empire', as indicated in the areas shown on the plan. Sod shall be installed in a level, clean manner without noticeable grade differences, rough edges, or gaps. Sod shall be rolled, and staked as necessary to prevent erosion.
10. No substitutions shall be permitted without prior approval from the Landscape Architect.
11. All site areas which are not built upon or paved shall be landscaped, sodded, seeded, and/or mulched, unless left in a natural, undisturbed state.
12. The Contractor shall be responsible for surveying any property lines, easements, or other boundaries if required to control the proper location of work within the project.
13. The Contractor shall be responsible for the thorough repair of existing grade, turf, landscaping, etc. damaged in the course of work.
14. The Contractor is entirely responsible for the work until the job is in full and exact compliance and conformity with provisions expressed or implied in the plans and specifications and as otherwise directed and determined by the Landscape Architect. The Landscape Architect will inspect the work to insure that it complies as a condition for final payment to the Contractor.
15. The Contractor is responsible for maintenance of the project during construction and shall bear all risk of loss, theft or damage to the project until all punchlist items are satisfactorily resolved and the job is officially turned over. Plantings shall be maintained by watering, removing dead branches, resetting plants to proper grades and upright positions, staking to ensure vertical growth, weeding, mowing, and any other operations necessary to complete maintenance, including the replacement of any material that exhibits visible and unsightly evidence of "shocking" without full recovery prior to job completion and final inspection.
16. Warranty: All new plant material, except trees, shall be guaranteed for 90 days, and shall be alive and in satisfactory growth for each specific plant at the end of the guaranty period. Trees, Palms, and specimen plants shall be guaranteed for a period of 1 year. The guaranty period shall commence upon the date of release of the retainage for the job, or for any defined phase of the job.
17. At the end of the warranty period, and at any time during that period, any plant material that has died or is not in satisfactory condition as determined by the Owner and the Landscape Architect, shall be removed and replaced with new healthy material of the original specified size and type within 10 calendar days. Excluded are replacements of plants due to acts of God, theft, vandalism, or acts of negligence on the part of others, and due to deleterious soil and/or drainage conditions which the Contractor documented to the attention of the Owner and Landscape Architect at the time of installation. The new material shall be guaranteed as outlined above, commencing the date that the job is accepted. The Contractor shall be responsible for the cost of all material and labor.

SEE SHEET L-2 FOR ADDITIONAL DETAILS

PLANT SCHEDULE

NOTE: Plant quantities are provided as a guide only. The contractor shall confirm total quantities as reflected by the plan.

Key	Qty.	Plant Name	Size and Spacing	Maintenance
AI	3	African Iris, White Dietes vegeta	#3; full; 3-5 ppp min; 3' oc	30" ht. x full mass; remove dead flower stalks
BFL	104	Blueberry Flax Lily Dianella tasmanica	#3; full; 30" oc	24" ht. x full mass
CG	40	Cordgrass Spartina bakeri	#3; full; 2' oc	4' ht. x full mass, allow natural growth; cut back biannually
DCJ	436	Dwarf Confederate Jasmine Trachelospermum asiaticum 'Minima'	#1; full; 15"+ runners; 3-7 runners min; 18" oc	10-15" ht, full mass; prevent intrusion into other plants
DFG	115	Dwarf Fakahatchee Grass Tripsacum floridanum	#3; 18-24" OA; 2' oc	Full mass, allow natural growth; maintain informally
DYH	41	Dwarf Yaupon Holly Ilex vomitoria 'Stokes Dwarf'	#3; 10-12" ht x 14-18" spr; 30" oc	30" ht x full mass
ICR	152	Dwarf Chinese Holly Ilex cornuta 'Rotunda'	#7; 24-30" ht x 18-22" spr; 30" oc	30" ht x full mass
LEG	31	Emerald Goddess Liriope Liriope muscari 'Emerald Goddess'	#1; full; 5-7 ppp min; 2' oc	18" ht x full mass
LGM	1	Little Gem Magnolia Magnolia grandiflora 'Little Gem'	Cont/B&B; 13-14' ht x 6' spr; 4" cal	Allow natural growth; prune only for form or dead wood
ND	10	Heavenly Bamboo Nandina domestica	#15; 3'+ ht x 2-1/2'+ spr; 7 canes min	Allow natural growth
NSH	15	Nellie Stevens Holly Ilex cornuta x attenuata 'Nellie R. Stevens'	#15; 4'+ ht x 2-1/2'+ spr	5' ht x 5' spr; full mass, maintain informally, do not shear
PC	10	Plumbago Plumbago capensis	#3; 18" x 18"+; 3' oc	4' ht x full mass; maintain informally; do not shear
PE	5	Slash Pine Pinus elliottii	Cont/B&B; 14-16' ht x 7-9" spr; Full; 4" cal min	Allow natural growth; prune dead wood
PEL	2	Slash Pine Pinus elliottii	Cont/B&B; 20' ht + Full; 6" cal	Allow natural growth; prune dead wood
PML	24	Japanese Yew, large Podocarpus macrophylus	Cont/B&B; 6'+ ht x 30"+ spr; bagged, full and vigorous; 30" oc	6' ht x 6'; full hedge; may be sheared
GV	2	Live Oak Quercus virginiana	Cont/B&B; 15'+ ht x 7-9" spr; 4" cal min	Allow natural growth; prune only for form or dead wood
SG	70	Society Garlic Tulbaghia violacea	#1; full; 6-8 ppp min; 2' oc	24" ht x full mass; remove dead flower stalks
SP	12	Sabal Palm Sabal palmetto	B.R.; hurricane cut; No more than 4' of boots below the lowest living frond; See plan for CT heights	Allow natural growth; prune only dead fronds
VS	76	Sandankwa Viburnum Viburnum suspensum	#7; 4'+ ht x 2-3' spr; 3' oc	3' ht x 3'; full hedge
YH	5	Yaupon Holly Ilex vomitoria	#30; 6-7' ht x 4-5' spr; multi-trunk	Allow natural growth; do not shear; prune only for form or dead wood
SOD		Zoysia 'Empire' Zoysia japonica 'Empire'		
MULCH		Pine Straw	3" depth	Refresh annually, or as needed

LANDSCAPE DATA

SITE AREA: 3.0 AC. (131,46 SF)

TREE REQUIREMENTS: 3.0 ACRES X 160" = 48" REQUIRED

LANDSCAPE BUFFERS
REQUIRED: CLASS A BUFFER REQUIRED ALONG ALL BOUNDARIES (3.45'± TOTAL)
2 CANOPY TREES PER 100 LF = 10 TREES
3 UNDERSTORY TREES PER 100 LF = 16 TREES
CONTINUOUS HEDGE

PROVIDED: CANOPY = 1 EXISTING + 10 PROPOSED TREES
UNDERSTORY = 1 EXISTING + 15 PROPOSED TREES
HEDGE MATERIAL

PROPOSED TREES:
EXISTING TREES PRESERVED: 48"*
PROPOSED CANOPY: 44"
PROPOSED UNDERSTORY: 102" (PALMS COUNTED AS 8" EACH)

TOTAL EXISTING + PROPOSED: 194" PROVIDED

*EXISTING TREES LOCATED OUTSIDE OF PROJECT AREA IN PARKING LOT TO THE WEST ARE NOT INCLUDED IN THIS CALCULATION.

GENERAL NOTES:

1. NO CONSTRUCTION OR DEMOLITION IS PROPOSED FOR THIS SITE BEYOND WHAT IS SHOWN ON THIS PLAN.
2. ALL EXCAVATED SOIL, DEBRIS, AND YARD WASTE SHALL BE PROPERLY DISPOSED OF OFF SITE.
3. ALL TREES, SHRUBS, AND SOD SHALL BE WATERED BY A 100% AUTOMATIC IRRIGATION SYSTEM EQUIPPED WITH A RAIN SENSOR DEVICE PURSUANT TO F.S. CHAPTER 373. LANDSCAPING SHALL CONFORM GENERALLY TO WATER-EFFICIENT DESIGN PRINCIPLES, INCLUDING THE USE OF NATIVE AND/OR DROUGHT TOLERANT SPECIES. ALL IRRIGATION ZONES SHALL BE "MODERATE WATER USE". SEE IRRIGATION PLAN.
4. THE IRRIGATION WATER SOURCE SHALL BE THE 3/4" WATER METER LOCATED AT THE CORNER OF PAIGE PLACE AND CABALLERO COURT.
5. ALL SITE AREAS WHICH ARE NOT BUILT UPON OR PAVED SHALL BE LANDSCAPED, SODDED, SEEDED, AND/OR MULCHED, UNLESS LEFT IN A NATURAL, UNDISTURBED STATE.
6. ALL PLANT MATERIAL USED SHALL BE EQUAL TO OR EXCEED THE GRADE OF FLORIDA #1 AS PER "GRADES AND STANDARDS FOR NURSERY PLANTS", STATE OF FLORIDA, LATEST EDITION.
7. ALL LANDSCAPING SHALL BE INSTALLED IN A PROFESSIONAL MANNER FOLLOWING ACCEPTABLE NURSERY PRACTICES AS SET BY THE FLORIDA NURSERY, GROWERS AND LANDSCAPE ASSOCIATION, FNGLA.
8. THE OWNER, INCLUDING SUCCESSORS AND ASSIGNS, SHALL BE RESPONSIBLE FOR THE MAINTENANCE OF THE LANDSCAPING ON-SITE AND THE GRASSED RIGHTS-OF-WAY.
9. THE OWNER RESERVES THE RIGHT TO ADD NONREQUIRED LANDSCAPING, UPGRADE MINIMUM SIZES, AND MAKE OTHER IMPROVEMENTS TO THE INSTALLED LANDSCAPING.

IMPORTANT! NOTICE TO CONTRACTORS:

This project is within the jurisdiction of The Villages. Bidding on these landscape plans is subject to mandatory procedures under The Villages' design review authority. Bidding shall occur only under direction of The Villages' Design Review Committee to insure that all requirements have been met. Bids solicited, submitted, or received otherwise will not be qualified bids.

Details about this process shall be obtained by contacting Michael Pape & Associates P.A.

2/16/15

REVISIONS

DATE	

MPA
MICHAEL PAPE & ASSOCIATES, P.A.
LAND PLANNING • SITE DESIGN • LANDSCAPE ARCHITECTURE
2351 S.E. 17TH STREET • OCALA, FLORIDA 34471 • (352) 351 - 3500

CITIZENS FIRST BANK DRIVE THRU
SPANISH SPRINGS TOWN CENTER
The Villages
LANDSCAPE PLAN

DATE 01/13/15
JOB NO. 2045
DWG. NO. 2045
DWN. BY SS
CHKD. BY SS

SHEET 1 OF 2

L-1

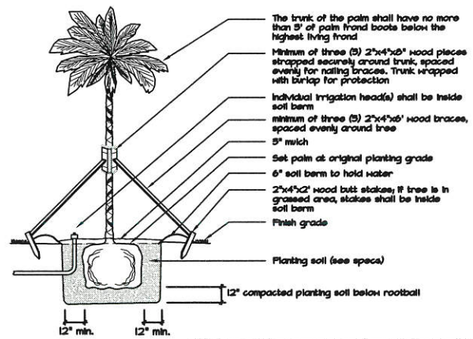

ALL WOOD SHALL BE PRESSURE-TREATED PINE, OR BETTER

PALM INSTALLATION DETAIL

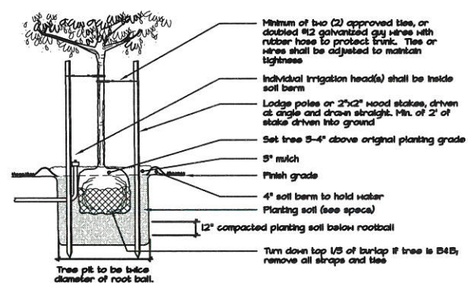

ALL WOOD SHALL BE PRESSURE-TREATED PINE, OR BETTER.

TREE INSTALLATION DETAIL

FOR MULTI-TRUNK TREES, TREES LESS THAN 5" CAL., OR CONTAINER TREES UP TO 30 GAL.

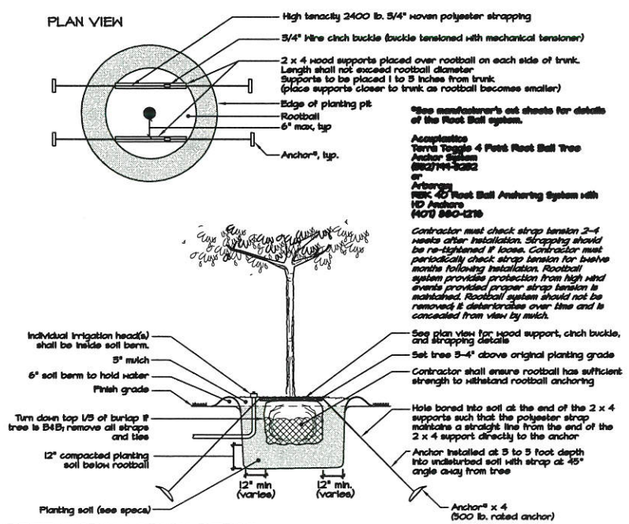

*See manufacturer's cut sheets for details of the Root Ball system.

Acceptable
Terra Toggle 4 Foot Root Ball Tree Anchor System
(352) 144-3282
or
Arborgen
RBK 40" Root Ball Anchoring System with HD Anchors
(407) 862-4219

Contractor must check strap tension 2-4 weeks after installation. Strapping should be re-tightened if loose. Contractor must periodically check strap tension for twelve months following installation. Rootball system provides protection from high wind events provided proper strap tension is maintained. Rootball system should not be removed; it deteriorates over time and is concealed from view by mulch.

TREE INSTALLATION DETAIL

FOR 3-4" CAL., 45-100 GAL. TREES OR B&B TREES UP TO 40" DIAMETER ROOTBALL

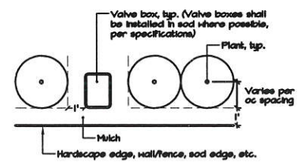

As shown on plan, all shrubs and groundcovers adjacent to curb/pavement, rec trail, wall/fence, building foundation, valve box/utility vault, sod, etc., shall be installed with the plant center spaced an additional 1' from the edge, unless otherwise noted

OFFSET DETAIL

N.T.S.

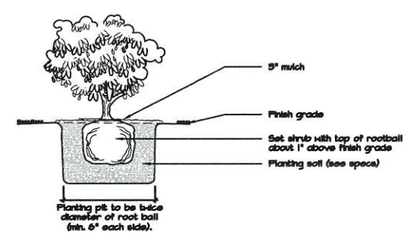

SHRUB INSTALLATION DETAIL

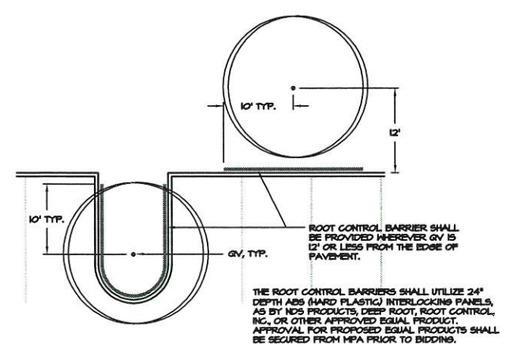

THE ROOT CONTROL BARRIERS SHALL UTILIZE 24" DEPTH ABS (HARD PLASTIC) INTERLOCKING PANELS, AS BY NDS PRODUCTS, DEEP ROOT, ROOT CONTROL, INC., OR OTHER APPROVED EQUAL PRODUCT. APPROVAL FOR PROPOSED EQUAL PRODUCTS SHALL BE SECURED FROM MPA PRIOR TO BIDDING.

ROOT CONTROL BARRIER DETAIL

1" = 10'

Individual or continuous barricade to be constructed of 2x4 lumber, 4' ht, to protect existing trees to remain during clearing of trees and undertrush to be removed;

Locate barrier to protect Critical Protection Zone (that area surrounding a tree within a circle described by a radius of one foot for each inch of the tree's diameter).

TREE PROTECTION DETAIL

NOT TO SCALE

LANDSCAPE NOTES (REFER TO THE DETAILED SPECIFICATIONS)

1. The Landscape Contract shall generally include the following work:
   - A. Finish grading 4"± in all areas of the work.
   - B. Thorough removal of existing vegetation in all areas of the work, including application(s) of post-emergent herbicide at least two weeks prior to planting, and use of pre-emergent herbicide during planting.
   - C. Supplying of plant material of the specified type, size, and quality.
   - D. Proper location, layout, and orientation of trees and planting beds.
   - E. Proper amendment of the soil used for planting, preparation of bed areas, sizing of planting pits, and correct planting procedures.
   - F. Installation of sod within the limits shown on the plan, in a neat, finished manner meeting specified requirements.
   - G. Watering and maintaining all plantings per the specified requirements until final completion and acceptance.
   - H. Observing and following any special requirements beyond the specifications as noted on the plans.
2. The Landscape Contractor shall be responsible for:
   - A. Observing and reporting any detrimental soil, drainage, or other any conditions which would affect the health and performance of the landscaping.
   - B. Following all applicable codes and regulations concerning the work, whether or not they are stipulated in the bid documents.
   - C. Providing competent supervision of the work at all times.
   - D. Reporting and repairing any damage caused by his work or actions.
   - E. Maintaining the jobsite in a clean, professional, and workmanlike manner.
   - F. Coordination of or with irrigation installation in order to achieve proper coverage, including adjustments of plant locations if required.
   - G. Coordination with all other aspects of the job affecting the finished character of the landscaping -particularly the drainage system- to achieve proper results, including adjustments to plant locations if required.
   - H. Prosecuting the work in a continuous and diligent manner until it is complete according to the Plans and Specifications.
   - I. Following all administrative and technical requirements of the bid documents.
3. Michael Pape & Associates, P.A. is responsible for insuring that the work meets all requirements stipulated and implied in the Plans and Specifications. Any work that does not is subject to rejection, and replacement by the contractor at his own cost.

READ AND FOLLOW THE SPECIFICATIONS.

IMPORTANT! NOTICE TO CONTRACTORS:

This project is within the jurisdiction of The Villages. Bidding on these landscape plans is subject to mandatory procedures under The Villages' design review authority. Bidding shall occur only under direction of The Villages' Design Review Committee to insure that all requirements have been met. Bids solicited, submitted, or received otherwise will not be qualified bids.

Details about this process shall be obtained by contacting Michael Pape & Associates PA.

2/16/15

DATE	REVISIONS

MPA
MICHAEL PAPE & ASSOCIATES, P.A.
LAND PLANNING • SITE DESIGN • LANDSCAPE ARCHITECTURE
2351 S.E. 17TH STREET • OCALA, FLORIDA 34471 • (352) 351 - 3500

The Villages

CITIZENS FIRST BANK DRIVE THRU
SPANISH SPRINGS TOWN CENTER

LANDSCAPE PLAN

DATE 01/13/15
JOB NO. 2045
DWG. NO. 2045
DWN. BY SS
CHKD. BY MP

SHEET 2 OF 2

L-2

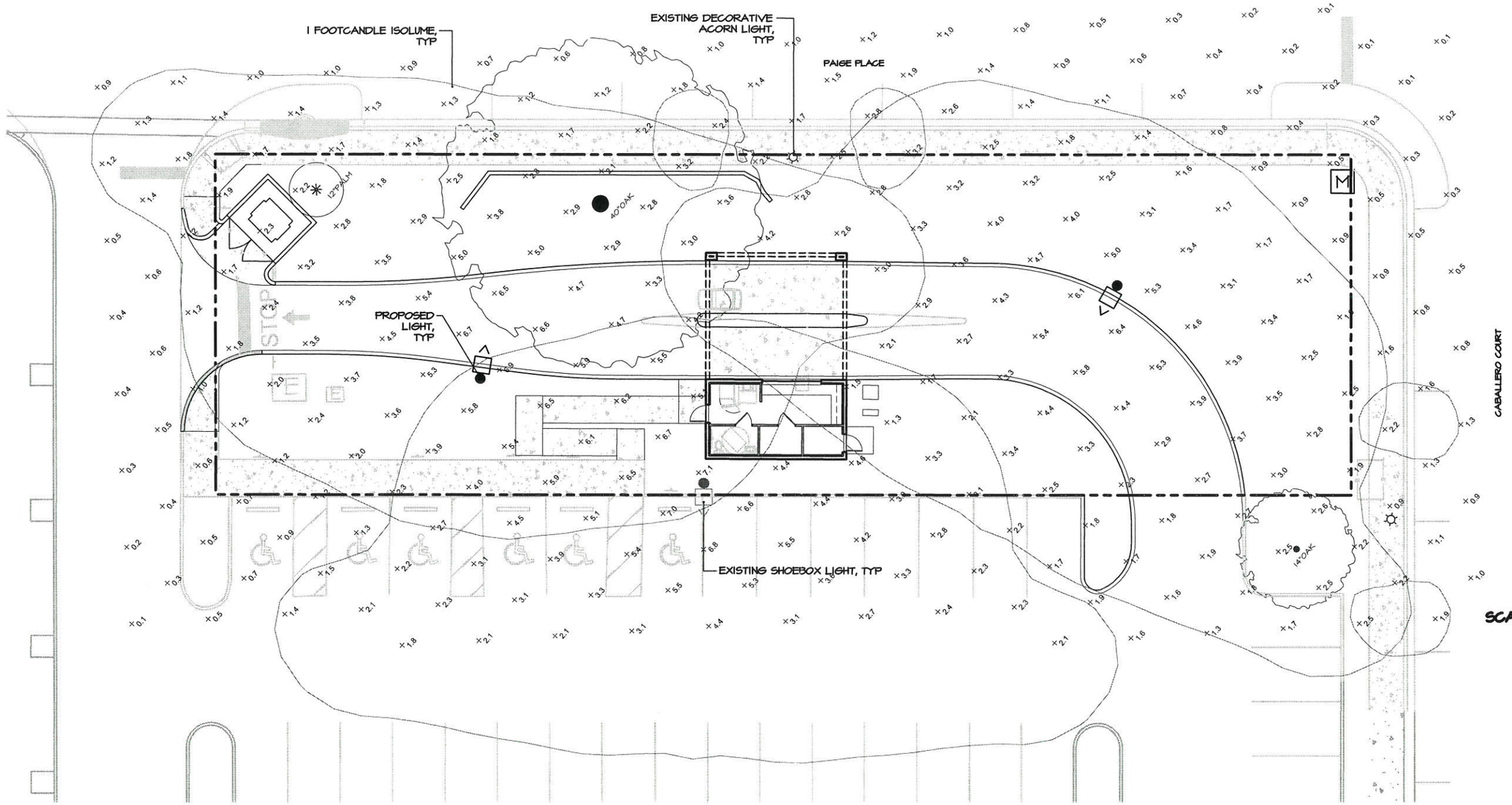

SCALE: 1"=10'

NOTES:

1. Architectural lighting is required for areas around the building to maintain adequate lighting for safety and security, and such lighting is not addressed or shown on this plan.
2. Light installations for off site roadways and/or adjoining properties shown on this plan have been included in the calculations.
3. Site Calculations:

   Average 3.7 fc
   Max/Min Ratio 6.2:1

KEY

DUKE ENERGY SINGLE SHOEBOX TRU425WWBFU0024 TRIBUTE BY LUMARK; TYPE III FORMED DISTRIBUTION, 400W, HPS, 30' MOUNTING HEIGHT; ROUND, BRONZE, TAPERED CONCRETE POLE BY AMERON, MODEL MER-9/BZ3 (2 TOTAL)

ALL LIGHT FIXTURES/POLES AVAILABLE THROUGH DUKE ENERGY, AND ARE TO MATCH PREVIOUS VILLAGE INSTALLATIONS

2/12/15

DATE	REVISIONS

MPA

MICHAEL PAPE & ASSOCIATES, P.A.

LAND PLANNING • SITE DESIGN • LANDSCAPE ARCHITECTURE

2351 S.E. 17TH STREET • OCALA, FLORIDA 34471 • (352) 351 - 3500

CITIZENS FIRST BANK DRIVE THRU

SPANISH SPRINGS TOWN CENTER

The Villages

SITE LIGHTING PLAN

DATE 01/08/15

JOB NO. 2045

DWG. NO. 2045

DWN. BY SS

CHKD. BY SS

SHEET 1 OF 1

LTG-1

The Villages®

SITE PLAN OF
CITIZENS FIRST BANK DRIVE THRU
@ SPANISH SPRINGS TOWN CENTER

LEGAL DESCRIPTION

BUILDING AREA II, VILLAGE CENTER DOWNTOWN, ACCORDING TO THE PLAT THEREOF RECORDED IN PLAT BOOK 55, PAGES 72 THROUGH 79, INCLUSIVE, OF THE PUBLIC RECORDS OF LAKE COUNTY, FLORIDA.

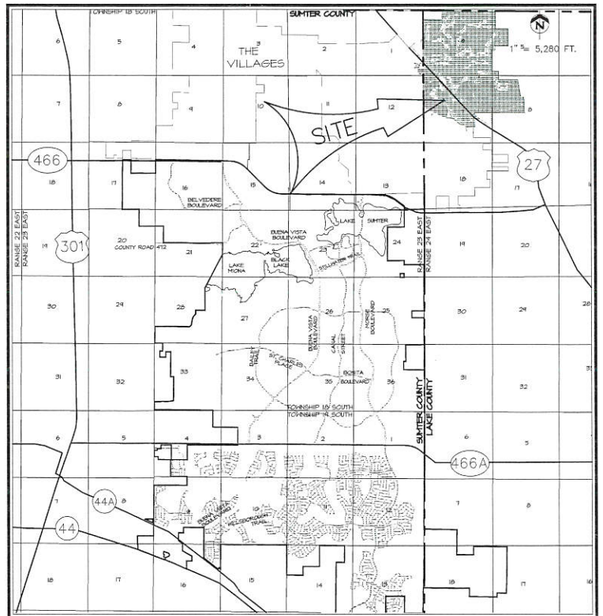

VICINITY MAP

SECTIONS 7, TOWNSHIP 18 SOUTH: RANGE 24 EAST
LAKE COUNTY, FLORIDA

SHEET INDEX

1 COVER SHEET
2 AERIAL PHOTOGRAPH
3 MASTER DEVELOPMENT PLAN
4 DEMOLITION PLAN
5 SITE PLAN
6 GRADING & DRAINAGE PLAN
7 UTILITY PLAN
8 GENERAL DETAILS
9 DUMPSTER PAD AND ENCLOSURE DETAILS
E1 EROSION CONTROL PLAN

THIS PLAN HAS BEEN APPROVED BY THE VILLAGES AND NO CHANGES SHALL OCCUR TO THE LAYOUT, DESIGN OR ANY OTHER ASPECT OF THE PLAN, WITHOUT RESUBMITTAL AND SUBSEQUENT APPROVAL OF ANY REQUESTED REVISIONS. UPON COMPLETION OF THE SITE WORK, THE VILLAGES RESERVES THE ABSOLUTE RIGHT TO REVIEW THE FINISHED CONSTRUCTION AND TO DETERMINE WHETHER THE COMPLETED JOB MEETS THE APPROVED SUBMITTAL PLANS AND SPECIFICATIONS. THE PARCEL DEVELOPER SHALL BE RESPONSIBLE FOR CONTACTING THE VILLAGES TO SPECIFICALLY REQUEST A FINAL INSPECTION. ANY DEFICIENCIES FOUND BY THE VILLAGES WILL BE IDENTIFIED IN WRITING TO THE PARCEL DEVELOPER, WHO SHALL IMMEDIATELY TAKE ALL CORRECTIVE ACTION NECESSARY TO REMEDY ANY DEFICIENCIES. FINAL APPROVAL FROM THE VILLAGES SHALL BE OBTAINED PRIOR TO SUBMITTAL OF THE FINAL CERTIFICATION OF COMPLETION TO THE TOWN OF LADY LAKE BY THE PROJECT ENGINEER.

THE STANDARD DETAILS FOR THIS PROJECT SHALL BE FOUND IN "THE VILLAGES CONSTRUCTION DETAILS MANUAL, DATED MARCH 1, 2014", PREPARED BY GRANT & DZURO.

NOTE: ELEVATIONS SHOWN ARE BASED ON THE VILLAGES DATUM. TO OBTAIN N.G.V.D. ADD 3.46 FEET.

JEFFREY ALLEN HEAD
LICENSE No 58058
STATE OF FLORIDA
PROFESSIONAL ENGINEER

ENGINEER/SURVEYOR:
FARNER, BARLEY AND ASSOCIATES, INC.
4450 N.E. 83rd ROAD
WILDWOOD, FL 34785
JEFFREY A. HEAD, P.E.
FLA. LIC. NO. 58058

OWNER/DEVELOPER:
THE VILLAGES OPERATING COMPANY
1045 LAKE SUMTER LANDING
THE VILLAGES, FL 32162
MARTIN L. DZURO, VICE PRESIDENT

FARNER BARLEY AND ASSOCIATES, INC.
▲ ENGINEERS ▲ SURVEYORS ▲ PLANNERS
Certificate of Authorization Number: 4709
4450 N.E. 83rd Road ○ Wildwood, Florida 34785 ○ (352) 748-3126

FEB 13 2015

S:\LAKE\SITEPLANS\Spanish Springs Town Center\CITIZENS FIRST BANK DRIVE THRU\CIVIL\CONSTRUCTION\001 CFB DRIVE THRU COVER.dwg, 2/11/2015 8:10:45 AM, BRP

S:\LAKE\SITEPLANS\Spanish Springs Town Center\CITIZENS FIRST BANK DRIVE THRU\CIVIL\CONSTRUCTION\002 CFB DRIVE THRU AERIAL.dwg, 2/11/2015 8:11:25 AM, BRP

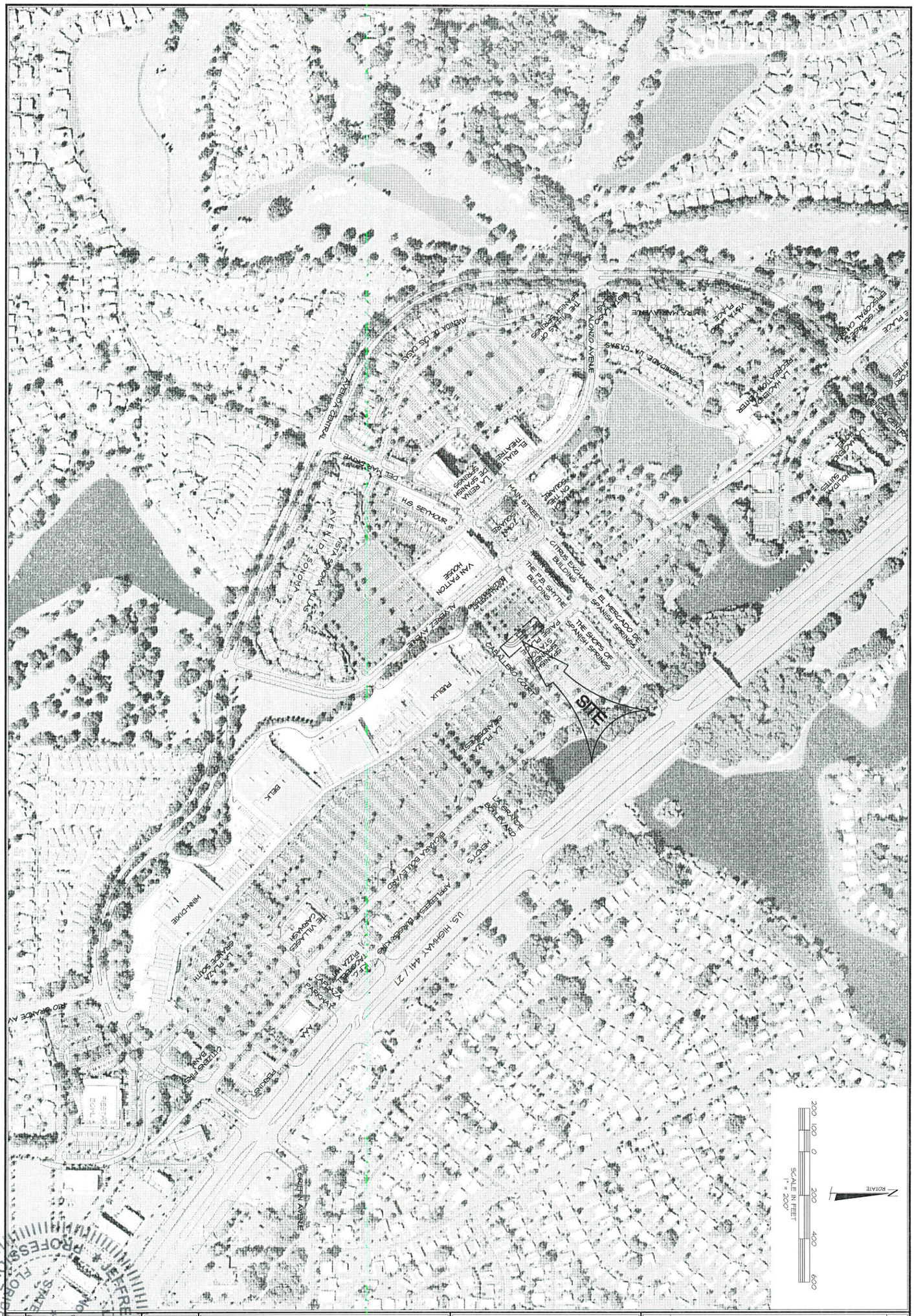

PROFESSIONAL ENGINEER
JEFFREY ALLEN HEAD
LICENSE
No. 58058
STATE OF FLORIDA
FEB 11 2015

SHT. 2 OF 2

DATE 1/6/15
DRAWN BY BRP
CHKD BY JAH
FILE NAME
JOB NO. 9211413223

VILALGES OF LAKE
CITIZENS FIRST BANK DRIVE THRU
● SPANISH SPRINGS TOWN CENTER

The Villages

AERIAL PHOTOGRAPH

FARNER BARLEY AND ASSOCIATES, INC.
▲ ENGINEERS ▲ SURVEYORS ▲ PLANNERS
Certificate of Authorization Number: 4709
4450 N.E. 83rd Road ○ Wildwood, Florida 34785 ○ (352) 748-3126

DATE	REVISIONS	BY

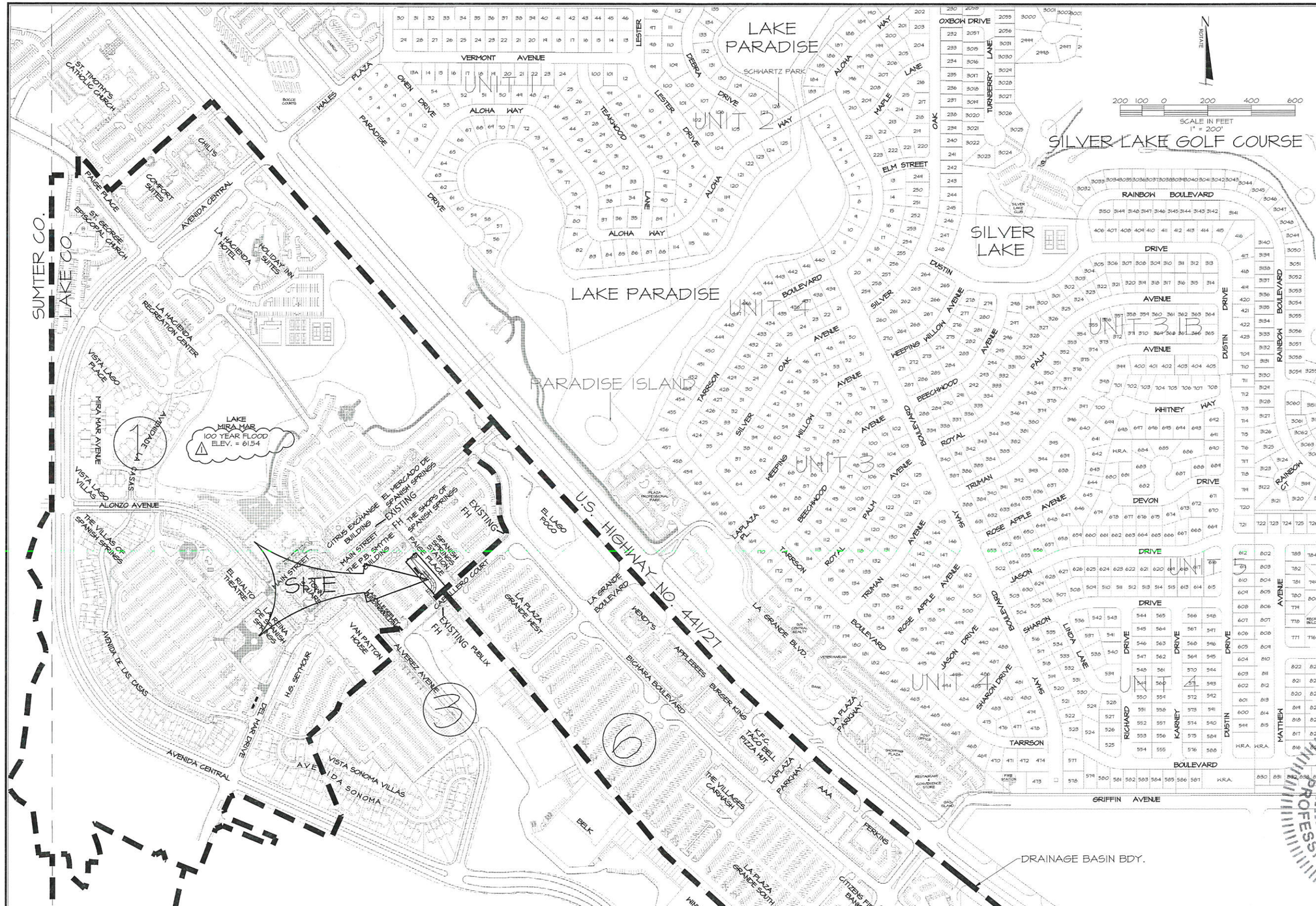

DATE	REVISIONS	BY
2/11/15	REVISED PER TOWN OF LADY LAKE COMMENTS DATED 2/4/15	BRP

FARNER BARLEY AND ASSOCIATES, INC.
ENGINEERS ▲ SURVEYORS ▲ PLANNERS
Certificate of Authorization Number: 4709
4450 N.E. 83rd Road ○ Wildwood, Florida 34785 ○ (352) 748-3126

The Villages
VILAGES OF LAKE
CITIZENS FIRST BANK DRIVE THRU
@ SPANISH SPRINGS TOWN CENTER

MASTER DEVELOPMENT PLAN

DATE 2/11/15
DRAWN BY BRP
CHKD BY JAH
FILE NAME
JOB NO. 921141322

FREDERICK ALLEN HEAD
No 58058
STATE OF FLORIDA
PROFESSIONAL ENGINEER

SHT. 3 OF 9

FEB 13 2015

S:\LAKE\SITEPLANS\Spanish Springs Town Center\CITIZENS FIRST BANK DRIVE THRU\CIVIL\CONSTRUCTION\003 CFB DRIVE THRU MDEV.dwg, 2/11/2015 8:11:57 AM, BRP

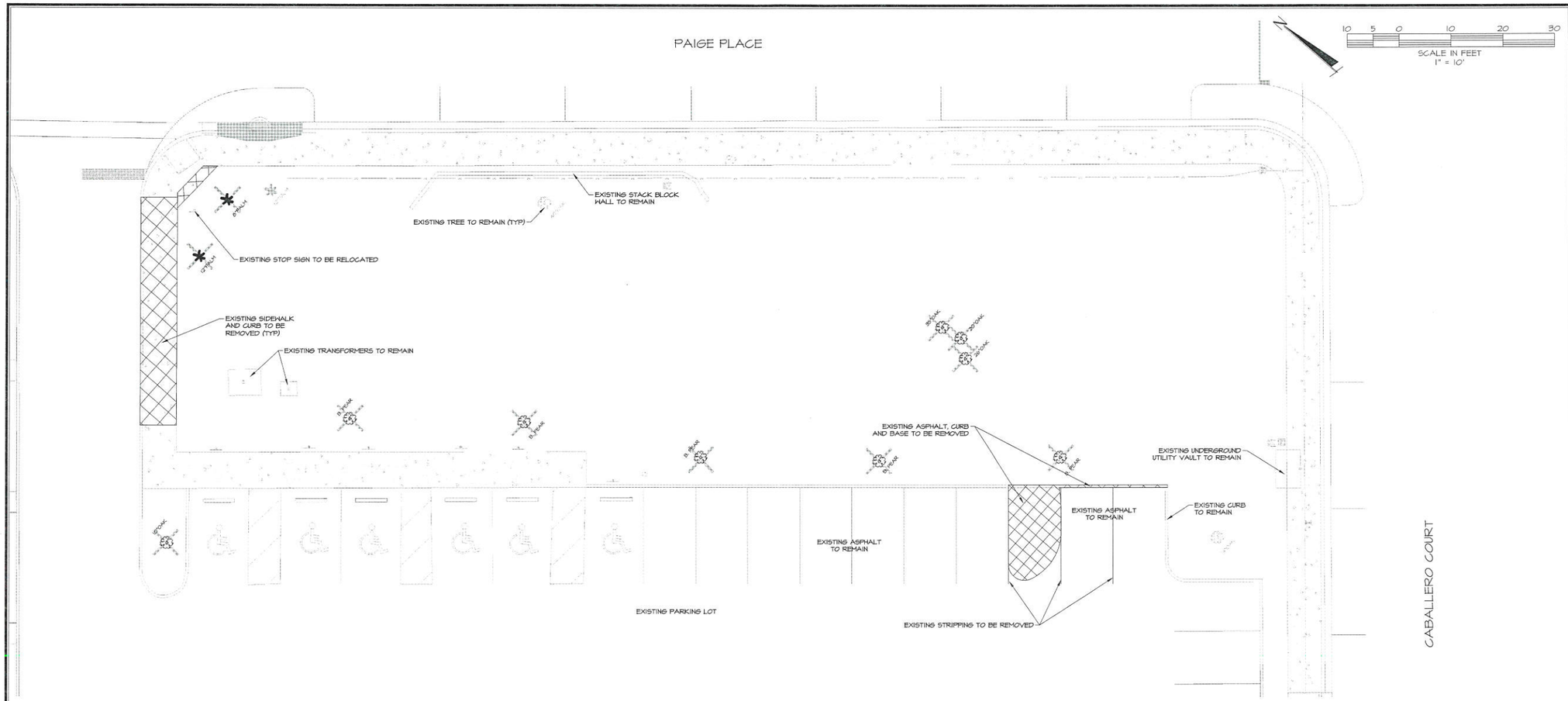

DEMOLITION NOTES:

1. THE INTENT OF THE DEMOLITION PLAN IS TO DEPICT EXISTING FEATURES THAT ENCUMBER THE PROPOSED CONSTRUCTION AREA AND ARE SCHEDULED FOR REMOVAL. SOME INCIDENTAL ITEMS MAY HAVE BEEN INADVERTENTLY OMITTED FROM THE PLAN. THE CONTRACTOR IS ENCOURAGED TO THOROUGHLY INSPECT THE SITE AS WELL AS REVIEW THE PLANS AND SPECIFICATIONS PRIOR TO SUBMITTING PRICING. CONTRACTOR WILL NOT RECEIVE ADDITIONAL COMPENSATION FOR INCIDENTAL ITEMS NOT SHOWN ON THIS DEMOLITION PLAN.
2. THIS DEMOLITION PLAN IS BASED ON AVAILABLE UTILITY INFORMATION AND MAY OR MAY NOT BE ALL INCLUSIVE FOR THIS SITE. ANY UTILITIES ENCOUNTERED DURING DEMOLITION THAT ARE NOT DEPICTED/ADDRESSED ON THIS DRAWING SHOULD BE BROUGHT TO THE ATTENTION OF THE ENGINEER OF RECORD IMMEDIATELY.
3. CONTRACTOR IS REQUIRED TO OBTAIN ALL DEMOLITION PERMITS.
4. ALL FEATURES IDENTIFIED ON THIS PLAN WHICH ARE LISTED TO BE DEMOLISHED ARE TO BE REMOVED FROM THE SITE. AFTER DEMOLITION IS COMPLETE THE SITE SHALL BE DELIVERED IN A CONDITION SUITABLE FOR DEVELOPMENT.
5. CONTRACTOR SHALL LIMIT ALL DEMOLITION ACTIVITIES TO THOSE AREAS DELINEATED ON THE CONSTRUCTION DRAWINGS UNLESS OTHERWISE DIRECTED BY OWNER OR AS REQUIRED FOR CONSTRUCTION OF IMPROVEMENTS.
6. CONTRACTOR IS RESPONSIBLE FOR CONTROLLING AIRBORNE DUST AND POLLUTANTS BY USING WATER SPRINKLING OR OTHER SUITABLE MEANS OF CONTROL.
7. CONTRACTOR TO USE CARE IN HANDLING DEBRIS FROM SITE TO ENSURE THE SAFETY OF THE PUBLIC. HAUL ROUTE TO BE CLOSELY MONITORED FOR DEBRIS OR MATERIALS TRACKED ONTO ADJOINING ROADWAYS, SIDEWALKS, ETC., ROADWAYS AND WALKWAYS TO BE CLEARED DAILY OR AS NECESSARY TO MAINTAIN PUBLIC SAFETY.
8. ALL CONCRETE TO BE REMOVED SHALL BE SAW CUT ADJACENT TO REMAINING IMPROVEMENTS.
9. EXISTING SITE FEATURES LOCATED WITHIN THE AREA OF DEMOLITION IDENTIFIED TO REMAIN SHALL BE PROTECTED DURING THE COURSE OF CONSTRUCTION; FEATURES AFFECTED BY GRADING SHALL BE ADJUSTED TO MEET DESIGN GRADES.
10. SEE EROSION CONTROL PLAN FOR REMAINING INLET PROTECTION AND EROSION PREVENTION.
11. AT THE END OF EACH WORK PERIOD, ANY DROP-OFF IN THE AREA ADJACENT TO THE TRAVEL WAY OF ABUTTING ROADS SHALL BE BACK FILLED IN ACCORDANCE WITH FDOT STANDARDS OR SHALL BE OTHERWISE PROTECTED WITH TEMPORARY BARRIER WALL AT THE CONTRACTOR'S EXPENSE.
12. THE CONTRACTOR SHALL ENSURE THAT THE MAINTENANCE OF TRAFFIC FOR THE PROJECT CONFORMS WITH FDOT STANDARDS FOR WORK BEING PERFORMED. ACCESS TO ADJACENT PROPERTIES TO BE MAINTAINED DURING CONSTRUCTION.
13. CONTRACTOR SHALL COORDINATE DEMOLITION WITH CONSTRUCTION OF IMPROVEMENTS WITHIN THE ROAD RIGHT-OF-WAY TO MINIMIZE TRAFFIC DISRUPTION.
14. CONTRACTOR TO COORDINATE WITH ALL UTILITY OWNERS PRIOR TO REMOVAL AND/OR RELOCATION OF EXISTING UTILITIES. ALL EXISTING UTILITY CONNECTIONS TO BE DISCONNECTED AND REMOVED TO SERVICE POINT OR METER UNLESS NOTED TO REMAIN. CONTRACTOR IS RESPONSIBLE IN MAINTAINING AND PROTECTING UTILITIES LOCATED WITHIN THE LIMITS OF CONSTRUCTION AND SHALL BE RESPONSIBLE FOR ALL DAMAGES CAUSED DURING CONSTRUCTION AND SHALL REPAIR SAID DAMAGES AT HIS/HERS EXPENSE.
15. EXISTING SURVEY MONUMENTATION SHALL NOT BE DISTURBED; ANY DISTURBED OR REMOVED MONUMENTATION SHALL BE REPLACED BY A REGISTERED SURVEYOR AT THE EXPENSE OF THE CONTRACTOR.
16. CLEAR AND GRUB ALL DISTURBED AREAS PRIOR TO CONSTRUCTION.

= EXISTING CONCRETE SIDEWALK AND CURB TO BE REMOVED

= EXISTING TREE TO BE REMOVED

= EXISTING PALM TREE TO BE REMOVED

DATE	REVISIONS	BY

FARNER BARLEY AND ASSOCIATES, INC.
▲ ENGINEERS ▲ SURVEYORS ▲ PLANNERS
Certificate of Authorization Number: 4709
4450 N.E. 83rd Road ○ Wildwood, Florida 34785 ○ (352) 748-3126

The Villages

VILLAGES OF LAKE
CITIZENS FIRST BANK DRIVE THRU
@ SPANISH SPRINGS TOWN CENTER

DEMOLITION PLAN

DATE 1/6/15
DRAWN BY BRP
CHKD BY JAH
FILE NAME
JOB NO. 92114.3223

JEFFREY ALLEN HEADLEY
LICENSE No 58058
STATE OF FLORIDA
PROFESSIONAL ENGINEER

SHT. # 4 OF 9

FEB 13 2015

S:\LAKE\SITEPLANS\Spanish Springs Town Center\CITIZENS FIRST BANK DRIVE THRU\CIVIL\CONSTRUCTION\004 CFB DRIVE THRU DEMO.dwg, 2/11/2015 8:12:08 AM, BRP

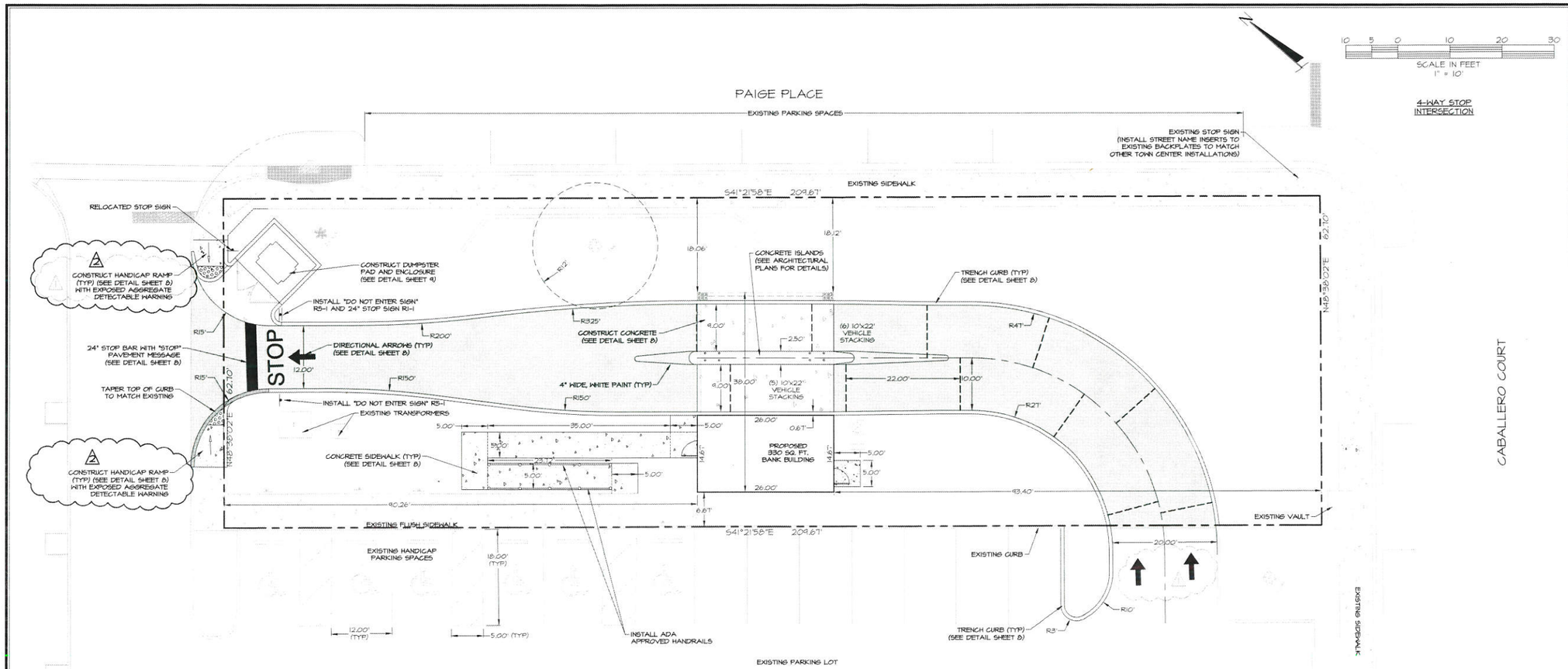

SITE DATA

1. PROJECT AREA = 0.28 AC. (12,364 SQ. FT.)
2. ZONING = CP
3. PROJECT ADDRESS - TO BE ASSIGNED
4. BUILDING TYPE: 1 STORY, CONCRETE BLOCK.
5. ENGINEER/SURVEYOR ~ FARNER BARLEY & ASSOCIATES, INC.
   4450 N.E. 83RD ROAD
   WILDWOOD, FLORIDA 34785
   (352) 748-3126
6. SOIL TYPE - 4 CANDLER FINE SANDS RAPIDLY PERMEABLE SOILS
7. PERMITTING AGENCIES,
   -TOWN OF LADY LAKE -SJRWMD
8. WATER AND SANITARY SEWER PROVIDED BY VILLAGES CENTER COMMUNITY DEVELOPMENT DISTRICT.
9. UNDERGROUND ELECTRICAL TRANSMISSION SYSTEM PROVIDED BY DUKE ENERGY
10. SOLID WASTE BY LOCAL FRANCHISE.
11. TELEPHONE SERVICE BY CENTURYLINK.
12. GAS PROVIDED / SERVICED BY; TECO
13. LOCATED IN SECTIONS 7, TOWNSHIP 18 SOUTH, RANGE 24 EAST, LADY LAKE, LAKE COUNTY, FLORIDA.
14. MONUMENT SIGN SETBACKS PER TOWN OF LADY LAKE LAND DEVELOPMENT REGULATIONS.
15. AREAS FOR TOTAL SITE (BASED ON FOOTPRINT, NOT INTERIOR SQ. FOOTAGE)

PROPOSED BUILDING	= 330 SQ. FT. (0.01 AC.) 2.7%
PROPOSED CONCRETE	= 605 SQ. FT. (0.01 AC.) 4.96%
PROPOSED ASPHALT	= 5,116 SQ. FT. (0.12 AC.) 41.44%
TOTAL NEW IMPERVIOUS AREA	= 6,051 SQ. FT. (0.14 AC.) 49.60%
OPEN AREA	= 6,313 SQ. FT. (0.14 AC.) 50.40%
PROJECT AREA	= 12,364 SQ. FT. (0.28 AC.) 100%

BUILDING SETBACKS

- 0 FT. FROM PAIGE PLACE.
- 0 FT. FROM CABALLERO COURT

NOTICE TO CONTRACTOR:

1. BEFORE DIGGING IT IS THE CONTRACTORS RESPONSIBILITY TO HAVE UNDERGROUND UTILITIES LOCATED FOR PROTECTION, SO AS NOT TO DISTURB ANY UTILITIES REMAINING ON AND OFF SITE.

NOTES:

1. IT IS THE RESPONSIBILITY OF THE CONTRACTOR TO RELOCATE ANY EXISTING UTILITIES IN CONFLICT WITH THIS PROPOSED SITE PLAN, AND TO COORDINATE RELOCATION WITH RESPECTIVE UTILITY PROVIDERS.
2. ALL RADII ARE 5' UNLESS INDICATED OTHERWISE.
3. ALL DIMENSION SHOWN ARE TO BOP UNLESS INDICATED OTHERWISE.
4. ALL TRAFFIC CONTROL SIGNS SHALL BE IN ACCORDANCE WITH THE MANUAL ON UNIFORM TRAFFIC CONTROL DEVICES.
5. ALL TRAFFIC FLOW ARROWS, STOP BARS AND TRAFFIC SEPARATION CENTERLINES SHALL BE LEAD-FREE PAINT.
6. REFUSE DISPOSAL BY ON-SITE DUMPSTER.
7. ALL HANDICAP ACCESSIBLE SIDEWALK ROUTES AND ALL SITE SIDEWALKS ARE NOT TO EXCEED A 2.00% MAXIMUM CROSS SLOPE WITH A MAXIMUM RUN SLOPE OF 5% NOT TO EXCEED 12:1 WITHOUT THE ADDITION OF HANDICAP HANDRAIL SYSTEM ALONG THE WALK PATH IN AREA OF MAX. SLOPE (GREATER THAN 5% BUT LESS THAN 12:1). IF DURING FINAL BUILDING CERTIFICATION ANY OF THESES AREAS ARE FOUND EXCEEDING ACCESSIBILITY LIMITS (MAXIMUM 2.00% CROSS SLOPE) FOR CERTIFICATE OF OCCUPANCY IT SHALL BE BE THE RESPONSIBILITY OF THE SITE CONTRACTOR TO REMOVE AND REPLACE ALL AREAS FOUND TO BE UNACCEPTABLE BY INSPECTOR. THIS WORK SHALL BE COMPLETED WITH NO ADDITIONAL COST TO OWNER AND/OR DESIGNERS.
8. ALL SIDEWALKS TO HAVE A ROCK SALT FINISH TO MATCH EXISTING SIDEWALKS.

= PROPOSED ASPHALT

= PROPOSED CONCRETE

DATE	REVISIONS	BY
2/11/15	REVISED PER TOWN OF LADY LAKE COMMENTS DATED 2/9/15	BRP
2/13/15	REVISED PER TOWN OF LADY LAKE COMMENTS DATED 2/12/15	BRP

FARNER BARLEY AND ASSOCIATES, INC.
▲ ENGINEERS ▲ SURVEYORS ▲ PLANNERS
Certificate of Authorization Number: 4709
4450 N.E. 83rd Road ○ Wildwood, Florida 34785 ○ (352) 748-3126

The Villages

VILLAGES OF LAKE
CITIZENS FIRST BANK DRIVE THRU
@ SPANISH SPRINGS TOWN CENTER

SITE PLAN

DATE 2/13/15
DRAWN BY BRP
CHKD BY JAH
FILE NAME 08.09.2014 SP.dwg
JOB NO. 92141.3223

SHEET 5 OF 9

JEFFREY ALLEN JAHNKE
LICENSE No 58058
STATE OF FLORIDA
PROFESSIONAL ENGINEER

FEB 13 2015

S:\LAKE\SITEPLANS\Spanish Springs Town Center\CITIZENS FIRST BANK DRIVE THRU\CIVIL\CONSTRUCTION\005 CFB DRIVE THRU SITE.dwg, 2/13/2015 6:40:57 AM, BRP

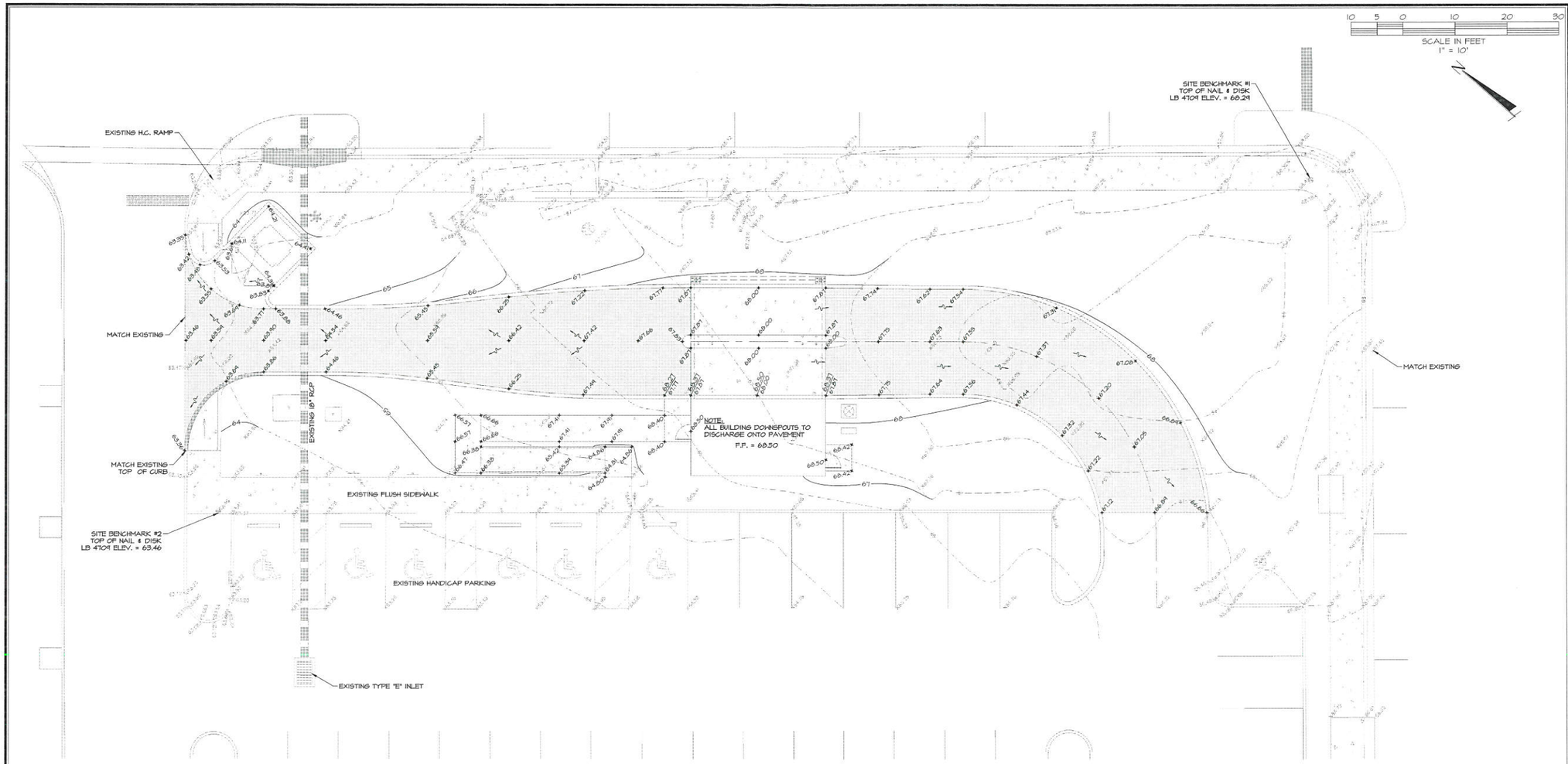

NOTES:

1. ELEVATIONS SHOWN ARE BASED ON THE VILLAGES DATUM. TO OBTAIN N.G.V.D. ADD 3.46 FEET.
2. THE STANDARD DETAILS FOR THIS PROJECT SHALL BE FOUND IN "THE VILLAGES CONSTRUCTION DETAILS, DATED "MARCH 1, 2014" PREPARED BY GRANT & DZURO OR AS AMENDED BY THESE PLANS.
3. GENERALIZED BERM INFORMATION NOT PROVIDED. FINAL GRADING SHALL BE DONE UNDER THE DIRECTION OF LANDSCAPE ARCHITECT. SEE LANDSCAPE PLAN FOR BERM LOCATIONS AND SIZE.
4. ALL HANDICAP ACCESSIBLE PARKING SPACES, HANDICAP ACCESSIBLE SIDEWALK ROUTES AND ALL SITE SIDEWALKS ARE NOT TO EXCEED A 2.00% MAXIMUM CROSS SLOPE. ALL SIDEWALKS ARE NOT TO EXCEED 5.00% LONGITUDINAL SLOPE, EXCEPT AT CURB RAMPS OR UNLESS OTHERWISE SHOWN. ALL HANDICAP PARKING SPACES ARE NOT TO EXCEED 2.00% LONGITUDINAL SLOPE. IF DURING FINAL BUILDING CERTIFICATION ANY OF THESES AREAS ARE FOUND EXCEEDING ACCESSIBILITY LIMITS (MAXIMUM 2.00%) FOR CERTIFICATE OF OCCUPANCY IT SHALL BE THE RESPONSIBILITY OF THE SITE CONTRACTOR TO REMOVE AND REPLACE ALL AREAS FOUND TO BE UNACCEPTABLE BY INSPECTOR. THIS WORK SHALL BE COMPLETED WITH NO ADDITIONAL COST TO OWNER AND/OR DESIGNERS.
5. TOP OF SLAB ELEVATION SHALL BE ADJUSTED BASED ON "AS-BUILT" ELEVATIONS OF EXISTING PAVEMENT. BEFORE CONSTRUCTION OF PROPOSED BUILDING, THE BUILDING CONTRACTOR SHALL COORDINATE WITH SITE ENGINEER ON THE SLAB ELEVATION. SHOULD THE CONSTRUCTION OF THE BUILDING SLAB OCCUR FIRST, THE SITE CONTRACTOR SHALL COORDINATE WITH THE SITE ENGINEER AND BUILDING CONTRACTOR FOR THE "AS-BUILT" TOP OF SLAB ELEVATION. PAVEMENT AND SIDEWALK GRADES MAY NEED TO BE ADJUSTED PRIOR TO SITE CONSTRUCTION.

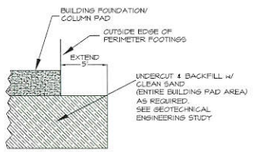

BUILDING PAD SECTION

LEGEND

- EXISTING CONTOUR LINE
- PROPOSED CONTOUR LINE
- PROPOSED PAVEMENT ELEVATION
- PROPOSED TOP OF CURB ELEVATION
- PROPOSED PAVEMENT ELEVATION
- X 75.25 EXISTING ELEVATION
- DIRECTION OF DRAINAGE

DATE	REVISIONS	BY

FARNER BARLEY AND ASSOCIATES, INC.
▲ ENGINEERS ▲ SURVEYORS ▲ PLANNERS
Certificate of Authorization Number: 4709
4450 N.E. 83rd Road ○ Wildwood, Florida 34785 ○ (352) 748-3126

The Villages
VILALGES OF LAKE
CITIZENS FIRST BANK DRIVE THRU
@ SPANISH SPRINGS TOWN CENTER

GRADING & DRAINAGE PLAN

DATE 1/6/15
DRAWN BY BRP
CHKD BY JAH
FILE NAME 006 CFB DRIVE THRU GRD-DRN
JOB NO. 92114.13223

JEFFREY ALLEN HEAD
LICENSE
No 58058
STATE OF FLORIDA
PROFESSIONAL ENGINEER

SHT 6 OF 9

FEB 13 2015

S:\LAKE\SITEPLANS\Spanish Springs Town Center\CITIZENS FIRST BANK DRIVE THRU\CIVIL\CONSTRUCTION\006 CFB DRIVE THRU GRD-DRN.dwg, 2/11/2015 8:12:30 AM, BRP

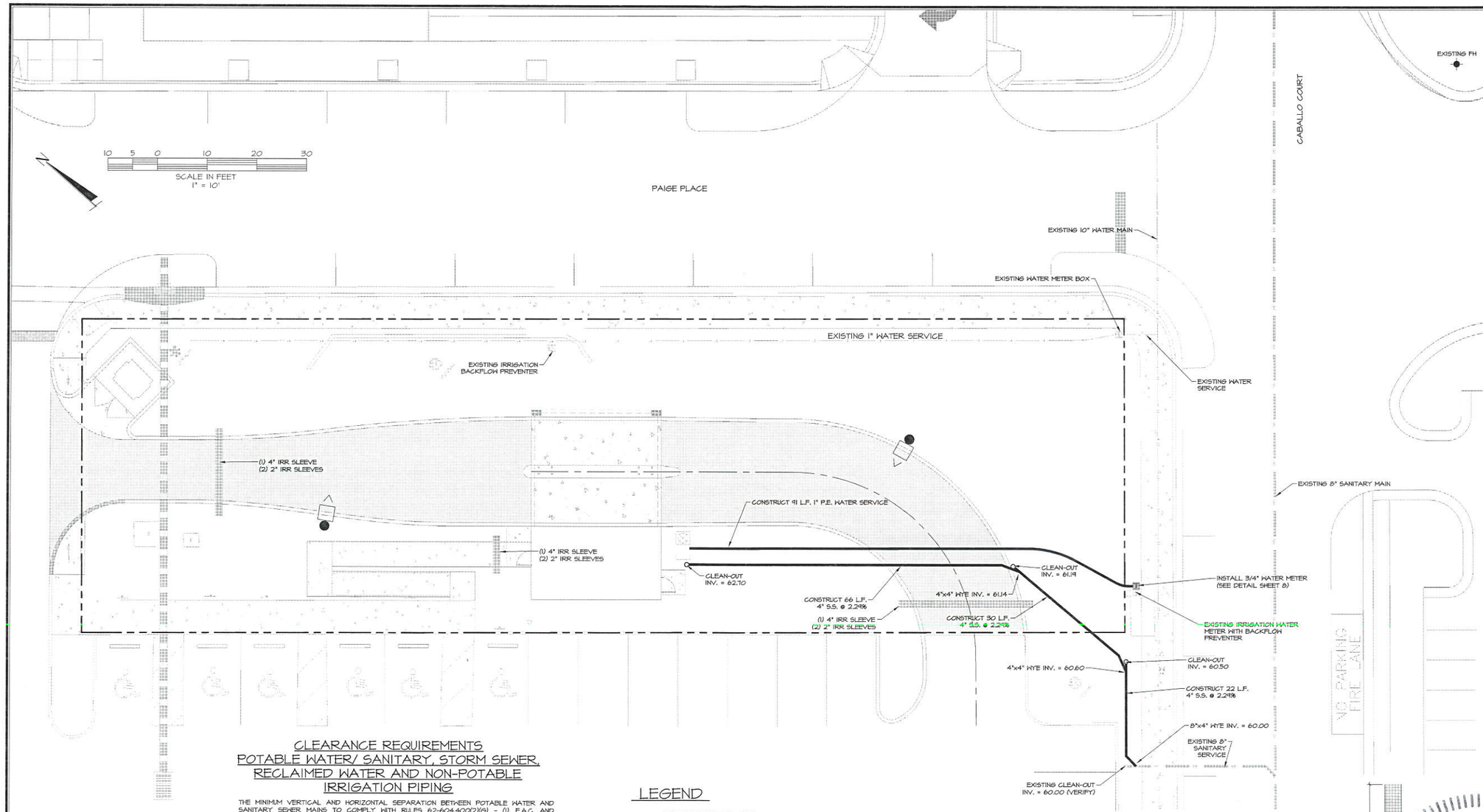

CLEARANCE REQUIREMENTS
POTABLE WATER/ SANITARY, STORM SEWER, RECLAIMED WATER AND NON-POTABLE IRRIGATION PIPING

THE MINIMUM VERTICAL AND HORIZONTAL SEPARATION BETWEEN POTABLE WATER AND SANITARY SEWER MAINS TO COMPLY WITH RULES 62-604.400(2)(G) - (I), F.A.C. AND 62-604.400 (3), F.A.C. ARE AS NOTED BELOW.

1. NEW OR RELOCATED, UNDERGROUND WATER MAINS SHALL BE LAID TO PROVIDE A HORIZONTAL DISTANCE OF AT LEAST SIX FEET, AND PREFERABLY TEN FEET, BETWEEN THE OUTSIDE OF THE WATER MAIN AND THE OUTSIDE OF ANY EXISTING OR PROPOSED GRAVITY- OR PRESSURE-TYPE SANITARY SEWER, WASTEWATER FORCE MAIN, OR PIPELINE CONVEYING RECLAIMED WATER NOT REGULATED UNDER PART III OF CHAPTER 62-610, F.A.C. THE MINIMUM HORIZONTAL SEPARATION DISTANCE BETWEEN WATER MAINS AND GRAVITY-TYPE SANITARY SEWERS SHALL BE REDUCED TO THREE FEET WHERE THE BOTTOM OF THE WATER MAIN IS LAID AT LEAST SIX INCHES ABOVE THE TOP OF THE SEWER. NEW OR RELOCATED, UNDERGROUND WATER MAINS CROSSING ANY EXISTING OR PROPOSED GRAVITY- OR VACUUM-TYPE SANITARY SEWER SHALL BE LAID SO THE OUTSIDE OF THE WATER MAIN IS AT LEAST SIX INCHES, AND PREFERABLY 12 INCHES, ABOVE OR AT LEAST 12 INCHES BELOW THE OUTSIDE OF THE OTHER PIPELINE. HOWEVER, IT IS PREFERABLE TO LAY THE WATER MAIN ABOVE THE OTHER PIPELINE. NEW OR RELOCATED, UNDERGROUND WATER MAINS CROSSING ANY EXISTING OR PROPOSED PRESSURE-TYPE SANITARY SEWER, WASTEWATER OR STORMWATER FORCE MAIN, OR PIPELINE CONVEYING RECLAIMED WATER SHALL BE LAID SO THE OUTSIDE OF THE WATER MAIN IS AT LEAST 12 INCHES ABOVE OR BELOW THE OUTSIDE OF THE OTHER PIPELINE. HOWEVER, IT IS PREFERABLE TO LAY THE WATER MAIN ABOVE THE OTHER PIPELINE.

2. AT THE UTILITY CROSSINGS DESCRIBED ABOVE, ONE FULL LENGTH OF WATER MAIN PIPE SHALL BE CENTERED ABOVE OR BELOW THE OTHER PIPELINE SO THE WATER MAIN JOINTS WILL BE AS FAR AS POSSIBLE FROM THE OTHER PIPELINE. ALTERNATIVELY, AT SUCH CROSSINGS, THE PIPES SHALL BE ARRANGED SO THAT ALL WATER MAIN JOINTS ARE AT LEAST THREE FEET FROM ALL JOINTS IN VACUUM-TYPE SANITARY SEWERS, OR PIPELINES CONVEYING RECLAIMED WATER REGULATED UNDER PART III OF CHAPTER 62-610, F.A.C., AND AT LEAST SIX FEET FROM ALL JOINTS IN GRAVITY-OR PRESSURE-TYPE SANITARY SEWERS, WASTEWATER FORCE MAINS, OR PIPELINES CONVEYING RECLAIMED WATER NOT REGULATED UNDER PART III OF CHAPTER 62-610, F.A. C.

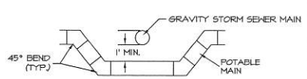

POTABLE & STORM SEWER MAIN CROSSING

NOTE:
CONTRACTOR SHALL USE PIPE DEFLECTION AND/OR FITTINGS TO ENSURE CLEARANCE REQUIREMENTS

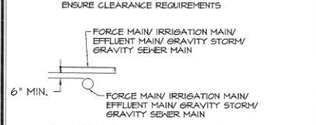

NON-POTABLE PRESSURE MAIN CROSSING DETAIL

LEGEND

- EXISTING WATER MAIN
- PROPOSED WATER MAIN
- EXISTING SANITARY SEWER
- EXISTING MANHOLE
- EXISTING FIRE HYDRANT

NOTE:
IT IS THE RESPONSIBILITY OF THE SITE CONTRACTOR TO CONSTRUCT ALL WATER SERVICES, WATER AND FIRE MAINS, AND SANITARY SEWER TRUNKS AND LATERAL SERVICES AS SHOWN ON THESE PLANS TO WITHIN 5 FT OF THE EXTERIOR WALL OF THE BUILDING STRUCTURES AS SHOWN ON THESE PLANS. IT IS THE RESPONSIBILITY OF THE SITE CONTRACTOR TO CONNECT PROPOSED FIRE MAINS AND WATER MAINS TO BACK FLOW PREVENTER LOCATED INSIDE THE PROPOSED BUILDING. THE SITE CONTRACTOR WILL COORDINATE WITH ARCHITECT AND CIVIL ENGINEER TO VERIFY LOCATION AND SIZE OF BUILDING CONNECTIONS OF PROPOSED WATER, FIRE AND SANITARY SERVICES.

KEY

DUKE ENERGY SINGLE SHOEBOX TRU42SWABFU0024 TRIBUTE BY LUMARK; TYPE III FORMED DISTRIBUTION, 400W, HPS, 30' MOUNTING HEIGHT; ROUND, BRONZE, TAPERED CONCRETE POLE BY AMERON, MODEL MER-9/BZ3.

ALL LIGHT FIXTURES/POLES AVAILABLE THROUGH DUKE ENERGY, AND ARE TO MATCH PREVIOUS VILLAGE INSTALLATIONS

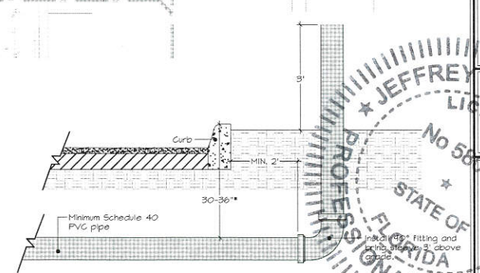

SLEEVE INSTALLATION DETAIL
N.T.S.

DATE	REVISIONS	BY

FARNER BARLEY AND ASSOCIATES, INC.
▲ ENGINEERS ▲ SURVEYORS ▲ PLANNERS
Certificate of Authorization Number: 4709
4450 N.E. 83rd Road ○ Wildwood, Florida 34785 ○ (352) 748-3126

The Villages

VILLAGES OF LAKE
CITIZENS FIRST BANK DRIVE THRU
@ SPANISH SPRINGS TOWN CENTER

UTILITY PLAN

DATE 1/13/15
DRAWN BY ERP
CHECKED BY MH
FIELD BK Footings
JOB NO. 12114.3999

JEFFREY LEE HEAD
No 58158
STATE OF FLORIDA
PROFESSIONAL ENGINEER

SHT. 7 OF 9

S:\LAKESITEPLANS\Spanish Springs Town Center\CITIZENS FIRST BANK DRIVE THRU\CIVIL\CONSTRUCTION\007 CFB DRIVE THRU UTILITY.dwg, 2/11/2015 8:12:42 AM, BRP

FEB 13 2015

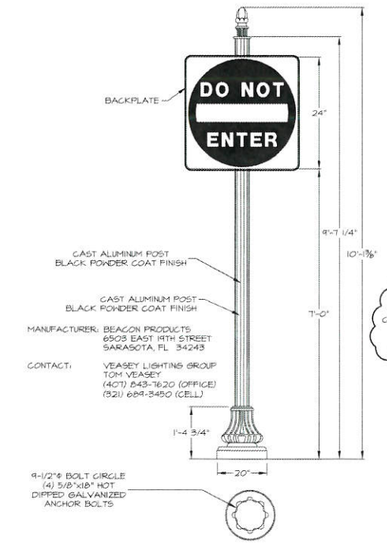

NOTES:
1. SIGN BACKPLATE IS BOLT ON CAST ALUMINUM BACK PLATE- BLACK POWDER COAT FINISH
2. ALL FASTENERS SHALL BE STAINLESS STEEL
3. ALL MOUNTED HEIGHTS ARE MEASURED TO BOTTOM OF SIGN.

DECORATIVE POST AND SIGN DETAIL
NTS

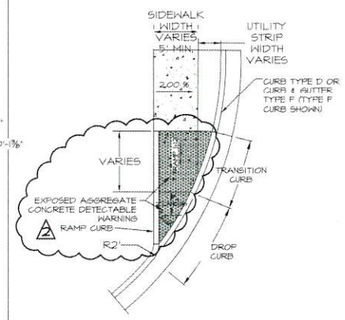

CURB CUT RAMP DETAIL
NTS

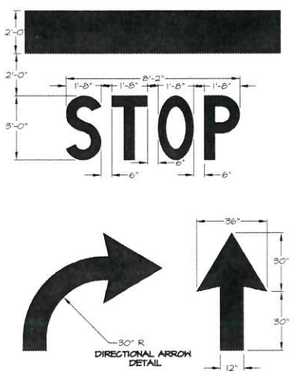

PAVEMENT MESSAGE, STOP BAR AND DIRECTIONAL ARROW DETAILS
NTS

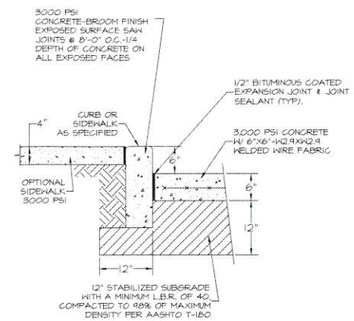

CONCRETE PAVEMENT DETAIL
NTS

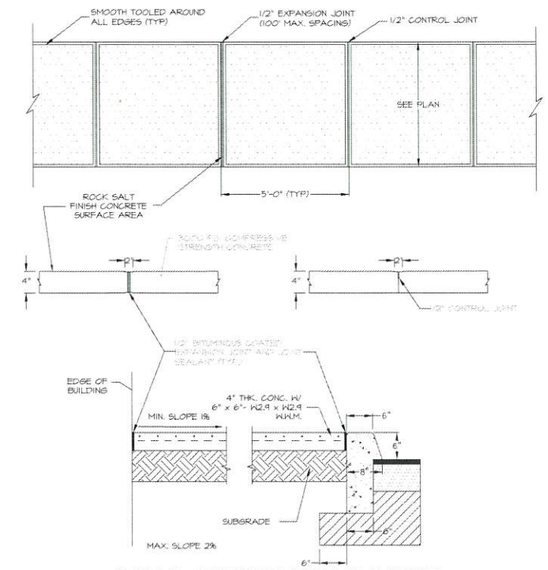

TYPICAL CONCRETE SIDEWALK DETAIL

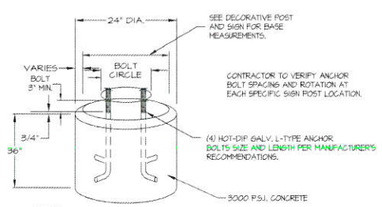

NOTE:
SET TOP OF BASE 2" ABOVE SURROUNDING FINISHED GRADE.

CONTRACTOR TO VERIFY ANCHOR BOLT SPACING AND ROTATION AT EACH SPECIFIC SIGN POST LOCATION.

DECORATIVE SIGN POST BASE DETAIL
NTS

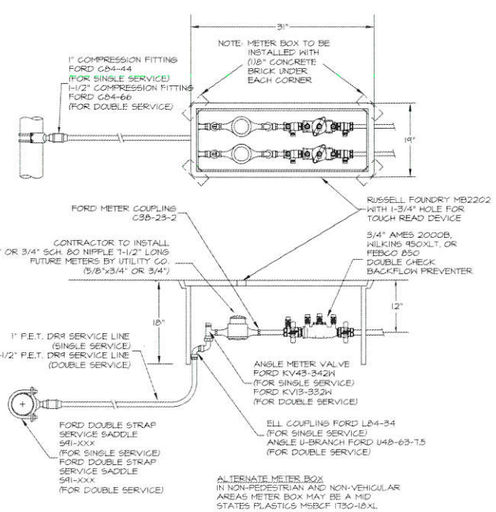

3/4" WATER METER WITH BACKFLOW PRENTER
NTS

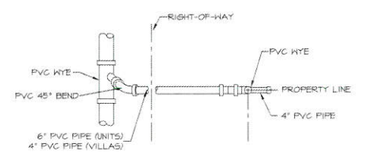

PLAN VIEW

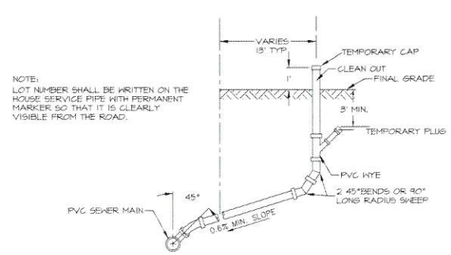

NOTE:
LOT NUMBER SHALL BE WRITTEN ON THE HOUSE SERVICE PIPE WITH PERMANENT MARKER SO THAT IT IS CLEARLY VISIBLE FROM THE ROAD.

SIDE VIEW

SANITARY SEWER SINGLE SERVICE DETAIL
NTS

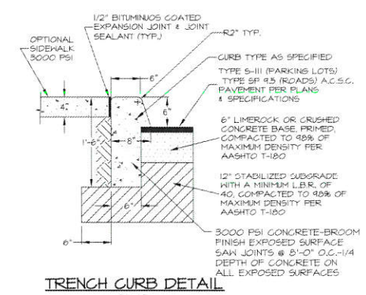

TRENCH CURB DETAIL
NTS

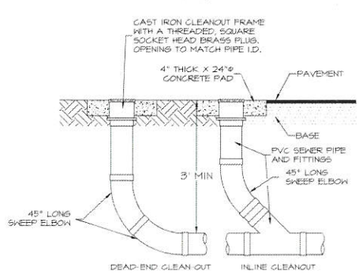

NOTE: IN PAVED AREAS INSTALL CONCRETE PAD AFTER PAVING IS COMPLETE.

CLEAN-OUT DETAIL (6" AND SMALLER MAINS)
NTS

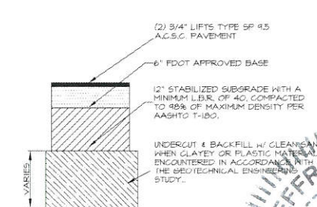

PAVEMENT SECTION
NTS

DATE	REVISIONS	BY
2/13/15	REVISED PER SUMTER COUNTY COMMENTS DATED 2/12/15	BRP

FARNER BARLEY AND ASSOCIATES, INC.
▲ ENGINEERS ▲ SURVEYORS ▲ PLANNERS
Certificate of Authorization Number: 4709
4450 N.E. 83rd Road ○ Wildwood, Florida 34785 ○ (352) 748-3126

The Villages
VILAGES OF LAKE
CITIZENS FIRST BANK DRIVE THRU
@ SPANISH SPRINGS TOWN CENTER

GENERAL DETAILS

DATE 2/13/15
DRAWN BY BRP
CHKD BY JAH
FILE NAME
JOB NO. 92141.3223

SHT. 6 OF 8

JEFFREY ALLEN HEADLEY
LICENSE
No 58058
STATE OF FLORIDA
PROFESSIONAL ENGINEER

FEB 1 3 2015

S:\LAKE\SITEPLANS\Spanish Springs Town Center\CITIZENS FIRST BANK DRIVE THRU\CIVIL\CONSTRUCTION\009 CFB DRIVE THRU DETAILS.dwg, 2/13/2015 6:41:34 AM, BRP

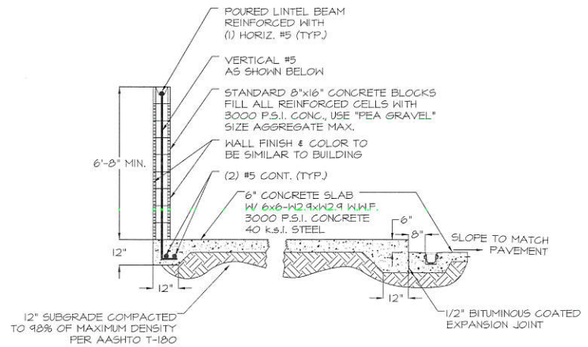

WALL & PAD SECTION

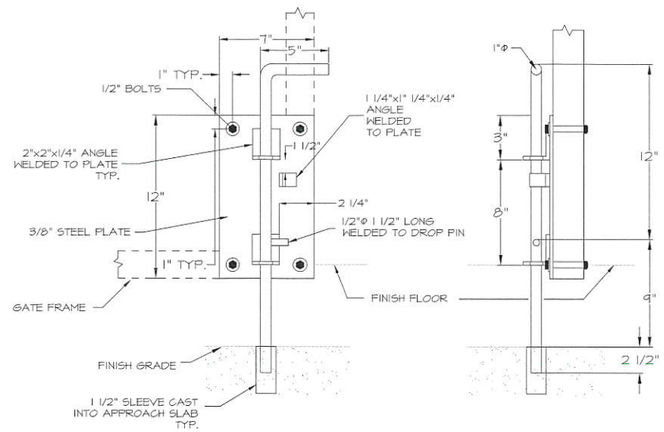

GATE DROP PIN

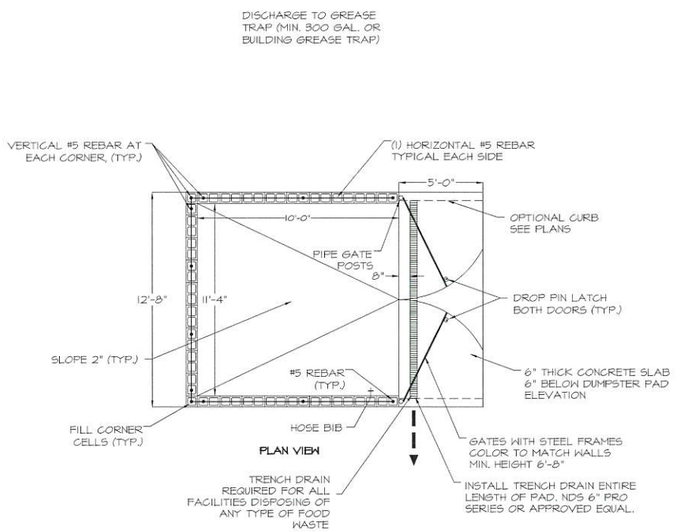

DUMPSTER ENCLOSURE DETAIL

N.T.S.

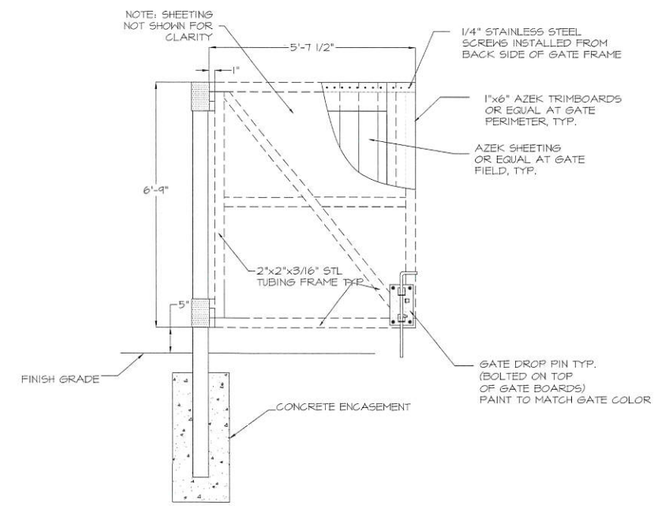

GATE FRAME

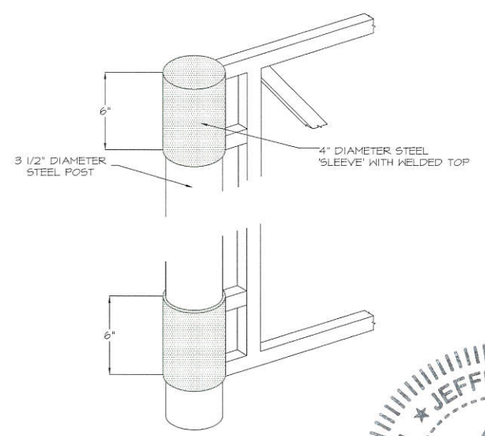

GATE HINGE

DATE	REVISIONS	BY

FARNER BARLEY AND ASSOCIATES, INC.
▲ ENGINEERS ▲ SURVEYORS ▲ PLANNERS
Certificate of Authorization Number: 4709
4450 N.E. 83rd Road ○ Wildwood, Florida 34785 ○ (352) 748-3126

The Villages
VILALGES OF LAKE
CITIZENS FIRST BANK DRIVE THRU
@ SPANISH SPRINGS TOWN CENTER

DUMPSTER PAD AND ENCLOSURE DETAILS

DATE 1/22/15
DRAWN BY BRP
CHKD BY JAH
FILE NAME
JOB NO. 921141.3223

JEFFREY ALLEN HEAD
LICENSE
No 58058
STATE OF FLORIDA
PROFESSIONAL ENGINEER

SHT 9 OF 9

FEB 13 2015

S:\LAKE\SITEPLANS\Spanish Springs Town Center\CITIZENS FIRST BANK DRIVE THRU\CIVIL\CONSTRUCTION\009 CFB DRIVE THRU DETAILS.dwg, 2/11/2015 8:12:48 AM, BRP

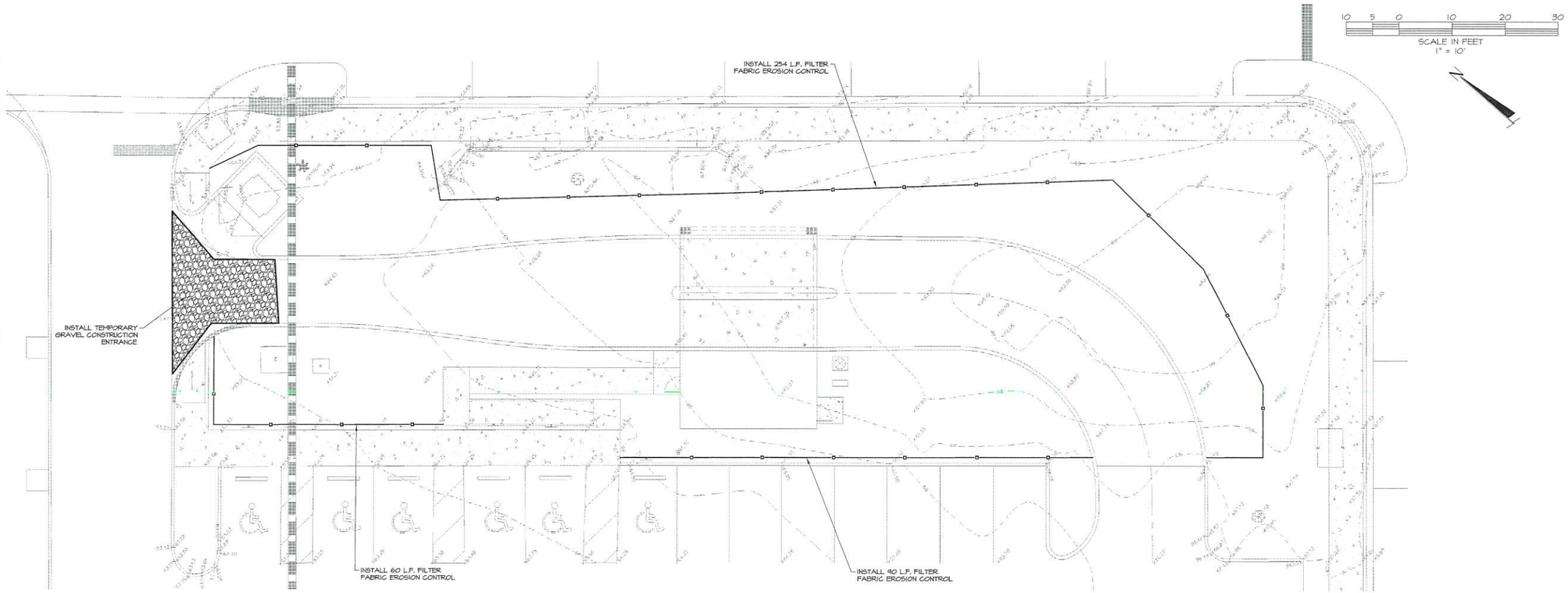

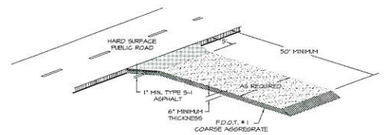

GRAVEL CONSTRUCTION ENTRANCE

N.T.S.

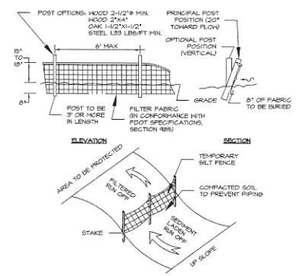

FLORIDA DOT TYPE III SILT FENCE AND EROSION CONTROL

NOTES:

1. THE FOLLOWING LIST REPRESENTS A BASIC EROSION AND SEDIMENT CONTROL PROGRAM WHICH IS TO BE IMPLEMENTED TO HELP PREVENT OFF SITE SEDIMENTATION DURING AND AFTER CONSTRUCTION OF THE PROJECT.
2. TEMPORARY EROSION CONTROL TO BE UTILIZED DURING CONSTRUCTION AT AREAS DESIGNATED BY THE ENGINEER OR AREAS ON SITE WHERE UNSTABILIZED GRADES MAY CAUSE EROSION PROBLEMS. EROSION CONTROL MAY BE REMOVED AFTER UPSLOPE AREA HAS BEEN STABILIZED BY SOD, OR COMPACTED AS DETERMINED BY THE OWNER.
3. PERMANENT EROSION AND SEDIMENT CONTROL MEASURES SHALL BE INSTALLED AT THE EARLIEST PRACTICAL TIME CONSISTENT WITH GOOD CONSTRUCTION PRACTICES. ONE OF THE FIRST CONSTRUCTION ACTIVITIES SHOULD BE THE PLACEMENT OF PERMANENT AND TEMPORARY EROSION AND SEDIMENT CONTROL MEASURES AROUND THE PERIMETER OF THE PROJECT OR THE INITIAL WORK AREA TO PROTECT THE PROJECT, ADJACENT PROPERTIES AND WATER RESOURCES.
4. TEMPORARY EROSION AND SEDIMENT CONTROL MEASURES SHALL BE COORDINATED WITH PERMANENT MEASURES TO ASSURE ECONOMICAL, EFFECTIVE AND CONTINUOUS CONTROL THROUGHOUT THE CONSTRUCTION PHASE. TEMPORARY MEASURES SHALL NOT BE CONSTRUCTED FOR EXPEDIENCY IN LIEU OF PERMANENT MEASURES.
5. EROSION AND SEDIMENT CONTROL MEASURES SHALL BE ADEQUATELY MAINTAINED TO PERFORM THEIR INTENDED FUNCTION DURING CONSTRUCTION OF THE PROJECT.
6. NECESSARY REPAIRS TO BARRIERS OR REPLACEMENT OF BARRIERS SHALL BE ACCOMPLISHED PROMPTLY.
7. SEDIMENT DEPOSITS SHOULD BE REMOVED AFTER EACH RAINFALL. THEY MUST BE REMOVED WHEN THE LEVEL OF DEPOSITION REACHES APPROXIMATELY ONE HALF THE HEIGHT OF THE BARRIER.
8. MATERIAL FROM SEDIMENT TRAPS SHALL NOT BE STOCKPILED OR DISPOSED OF IN A MANNER WHICH MAKES THEM READILY SUSCEPTIBLE TO BEING WASHED INTO ANY WATERCOURSE BY RUNOFF OR HIGH WATER.
9. ANY SEDIMENT DEPOSITS REMAINING IN PLACE AFTER THE BARRIERS ARE NO LONGER REQUIRED SHALL BE DRESSED TO CONFORM TO THE EXISTING GRADE, PREPARED AND SEEDED.
10. SILT FENCE TO BE PAID FOR UNDER THE CONTRACT UNIT PRICE FOR STAKED SILT FENCE (LF).
11. SILT FENCE TO REMAIN IN PLACE UNTIL FINISH GRADING FOR THE LANDSCAPING IS UNDER WAY.
12. PROTECT ALL CURB INLETS & GRATE INLETS AS SHOWN IN DETAILS SD-26 & SD-27 OF THE VILLAGES CONSTRUCTION & DEVELOPMENT MANUAL, LATEST EDITION.

NOTE:
THE EROSION CONTROL MEASURES SHOWN ON THIS PLAN ARE, IN THE OPINION OF THE ENGINEER, THE MINIMUM THAT MAY BE REQUIRED. ACTUAL FIELD CONDITIONS MAY REQUIRE EITHER ADDITIONAL OR REDUCED EROSION CONTROL MEASURES TO BE IMPLEMENTED. THE CONTRACTOR IS DIRECTED TO FOLLOW STANDARD BEST MANAGEMENT PRACTICES IN IMPLEMENTING A SUCCESSFUL EROSION CONTROL PLAN.

JEFFREY A. HEAD
LICENSE No 58058
STATE OF FLORIDA
PROFESSIONAL ENGINEER

JEFFREY A. HEAD, P.E.
REGISTERED PROFESSIONAL ENGINEER No. 58058
STATE OF FLORIDA

MARTIN L. DZURO
VICE PRESIDENT
THE VILLAGES OPERATING COMPANY

DATE	REVISIONS	BY

FARNER BARLEY AND ASSOCIATES, INC.
▲ ENGINEERS ▲ SURVEYORS ▲ PLANNERS
Certificate of Authorization Number: 4709
4450 N.E. 8Ave Road ◊ Wildwood, Florida 34785 ◊ (352) 748-3126

The Villages

VILAGES OF LAKE
CITIZENS FIRST BANK DRIVE THRU
@ SPANISH SPRINGS TOWN CENTER

EROSION CONTROL PLAN

DATE 1/6/15
DRAWN BY BRP
CHK'D BY JAH
FILE NAME 09-29-2014 16:20:09
JOB NO. 52141.3223

SHT. EI OF EI

S:\LAKE\SITEPLAN\SSpanish Springs Town Center\CITIZENS FIRST BANK DRIVE THRU\CIVIL\CONSTRUCTION\008 CFB DRIVE THRU EROSION.dwg, 2/11/2015 8:12:59 AM, BRP

FEB 13 2015

K-7

TOWN COMMISSION AGENDA ITEM

REQUESTED COMMISSION MEETING DATE: March 2, 2015

SUBJECT: **MJSP 10/14-002- Village Veranda at Lady Lake - A facility to be developed in three phases including three (3) outparcels with Office and Clinic with a total of 22,000 square footage of commercial spaces and a proposed Multi-story Building with 90 Assisted Living units and 40 Memory Care Facility units, to be erected along South Hwy 27/441, just north of the Too Your Health Spa (V) project (Alternate Key 1699100).**

DEPARTMENT: **Growth Management**

STAFF RECOMMENDED MOTION:

Staff recommends approval of Major Site Plan MJSP 10/14-002 as presented, granting the request for waiver to Chapter 20, Section 20-3C).6).A)., meeting all other site specifications as required per Town of Lady Lake Land Development Regulations and the provisions of the adopted memorandum of agreement Ordinance 2013-06.

On 10/20/2014, Applicant Gregory A. Beliveau with LPG Urban & Regional Planners on behalf of Village Veranda at Lady Lake, LLC, submitted an application for a Major Site Plan proposing a facility including three (3) outparcels with Office and Clinic space and a proposed Multi-story Building for an Assisted Living and Memory Care Facility, to be erected along South Hwy 27/441, identified by Alternate Key number 1699100. The site plan was reviewed to determine if it is in compliance with the Land Development Regulations (LDRs) including parking, setbacks, landscaping, engineering, environmental protection and commercial design standards.

The subject area reviewed is approximately 8.22 +/- acres and is located just north of the Too Your Health Spa (V) project, approximately 260 lineal feet north of the intersection of Hartsock Sawmill Road and South Highway 27/441. The property is zoned "CP" (Planned Commercial); which permits development and construction of the proposed improvements in accordance with the adopted CP Memorandum of Agreement of Ordinance 2013-06. The requested uses are consistent with the directives of the Comprehensive Plan, adopted Land Development Regulations, and Ordinance 2013-06.

Site plans have been submitted by Kenneth Randal Wicks, Professional Engineer with Wicks Engineering Services, Inc. The Landscaping and irrigation plans have been

prepared and certified by L.R. Huffstetler III, Registered Landscape Architect with LPG Urban & Regional Planners, Inc. For the proposed three-story Frame Vernacular Building, the Architectural Exterior Elevations were drawn by Song & Associates. The applicant has complied with requirements pursuant to the Land Development Regulations (LDRs) for site plans, including Chapter 7-Site Plan Development Regulations, Chapter 10–Landscaping & Tree Protection, Chapter 14-Water, Reuse Water, and Sewer Standard Specifications, and Chapter 20-Commercial Design Standards of the LDRs. Reviews were completed for the Town of Lady Lake by Town staff, Neel-Schaffer Engineering, and Fire Inspector Kerry Barnett for compliance with the Florida Fire Prevention Code. Attached are following reviews contained in the packet:

a. Town Engineer comments for the site plan dated February 18, 2015 (Satisfied).
b. Fire Review comments dated February 17, 2015 (Satisfied).
c. Waste Management comments dated January 13, 2015 (Satisfied).
d. Lady Lake Building Official comments dated February 19, 2015 (Satisfied).
e. Lake-Sumter MPO comments dated February 6, 2015 (Satisfied)
f. Lady Lake Public Works comments dated January 28, 2015 (Satisfied).
g. Florida Department of Transportation comments dated February 5, 2015 (Satisfied).

No state permits have been received to date by Town Staff; however, in accordance with Florida Statute 166.033. Paragraph 4, these permits may not be a requirement for development approval. The applicant, however, shall provide all required state permits prior to commencing construction. A note will be added to the Development Order accordingly.

Commercial Design Standard

Attached are the site plan and façade elevations for the Village Veranda at Lady Lake Facility:

In accordance with the Land Development Regulations, **Chapter 20, Section 20-3C).3).A)**., new buildings should adopt one of the four recommended architectural styles: Frame Vernacular, Craftsman/Bungalow, Mediterranean, or Mission. The Village Veranda at Lady Lake Facility building features the Frame Verna Style Design. The building exhibits:

✓ Steep Pitched Seam Metal Roof
✓ 5-bay pattern along the front of the Elevations
✓ Multi-Pane Sash Windows
✓ Multi-floor Windows align with first floor windows
✓ Wide Overhanging Towers
✓ Door Entrance Offset
✓ Pastel Family colors for Building Exterior Walls

As per **Chapter 20, Section 20-3C).6).A).,** Glass shall be transparent and reflective glass will be defined as having a visible light reflectance rating of fifteen (15) percent or greater and darkly tinted glass windows include glass with a visible light transmittance

rating of thirty-five (35) or less. Applicant is requesting a waiver from **Glass Transparency** requirements.

Applicant's Justification: Due to the fact that this use requires privacy to the residents of the units and if we do not provide the proper reflective glass this is not achieved. We are a use for ACLF and ALF and patient care as well, so privacy is very important in what we have to maintain. In short, the glass will be tinted for privacy, energy efficiency, and to control heat gain.

Tree Requirements:

In accordance with Chapter 10-Landscape and Tree Protection, the site is required to provide 1315.2 tree caliper inches based on its .8.22-acre area (160"x 8.22). Please see the landscaping tree proposal breakdown:

Existing Trees to remain	1526 tree caliper inches
Proposed Canopy & Understory Trees	542 tree caliper inches
Total tree caliper inches	2068 tree caliper inches

The applicant is providing significantly more than the required on-site tree caliper inches.

Notes:

- No historic trees will be removed for this development.

Public Meetings:

The **Technical Review Committee** members individually reviewed the application on Thursday, February 5, 2014, and provided all final comments regarding the Site Plan application on February 19, 2015.

The **Planning and Zoning Board** does not review Site Plan applications.

The application was presented at the **Special Town Commission Conceptual Workshop Meeting** on February 18, 2015, which recommended the project to move forward with a 4-0 vote.

FISCAL IMPACT: $0 **[ ] Capital Budget**
[ ] Operating
[ ] Other

ATTACHMENTS: [ ] Ordinance [ ] Resolution [ ] Budget

[X] Other – Site Plan

[ ] Support Documents/Contracts Available for Review in Manager's Office

(WB) 2-23-15	DEPARTMENT HEAD	Submitted 2/23/15	Date
	FINANCE DEPARTMENT	Approved as to Budget Requirements	Date
	TOWN ATTORNEY	Approved as to Form and Legality	Date
	TOWN MANAGER	Approved Agenda Item for: 3/2/15 2/24/15	Date

COMMISSION ACTION:

[ ] Approved as Recommended [ ] Disapproved

[ ] Tabled Indefinitely

[ ] Continued to Date Certain [ ] Approved with Modification

TOWN OF LADY LAKE
APPLICATION FOR SITE PLAN REVIEW

RECEIVED
OCT 20 2014
GROWTH MANAGEMENT DEPT.
TOWN LADY LAKE

1. Applicant's Name: Greg Beliveau, LPG Urban & Regional Planners, Inc.

   Telephone/Email: 352-385-1940/gregb@lpgurp.com

   Applicant is: Owner ___ Developer ___ Lessee ___ Agent X Optionee ___

2. Owner's Name: Village Veranda at Lady Lake, LLC

   Address: 2605 W. Atlantic Ave., #101-B, Delray Beach, FL 33445

   Telephone/Email: 561-279-0808/danderson@whitsyms.com

3. Engineer's Name: Ted Wicks, Wicks Engineering Services, Inc.

   Address: 225 W. Main Street, Tavares, FL 32778

   Telephone/Email: 352-343-8667/ tedwicks@wicksengineering.com

   Reg. Number: 33274

4. Architect's Name: Perry Douglas, Song & Associates, Inc.

   Address: 400 S. Australian Ave., 6th Floor, W. Pam Bch, FL 33401

   Telephone/Email: 561-655-2423, ext. 106/ pdouglas@songandassociates.com

   Registration Number: ___

5. Landscape Architect: L.R. Huffstetler, III, ASLA

   Address: 1162 Camp Ave., Mt. Dora, FL 32757

   Telephone/Email: 352-385-1940/ bobh@lpgurp.com

   Registration Number: LA0000744

6. Project Name: Village Veranda

   Physical Location/Address: Linden Street

11. The property is located in the vicinity of the following streets:

    East of US Hwy. 27/441

TOWN OF LADY LAKE
APPLICATION FOR SITE PLAN REVIEW

8. Area of property 358,063 Square Feet 8.22 Acres

9. The exact legal description of the property as shown on the Tax Receipt or the Warranty Deed, or attach a separate sheet to the application form:

   See Attached

10. The property is currently zoned: CP

11. Briefly describe the proposed project: Assisting Living Facility

    If for storage, what type of material will be stored? N/A

12. Have any development reviews and/or approvals been granted to this property?
    Yes X No ____ If yes, list the type, date and result:

    SSCPA and Rezoning

13. Has any Variance been granted concerning this property? Yes ____ No X
    If yes, list the Case Number and briefly describe the nature of the Variance.

14. The plans shall be drawn on 24" x 36" sheets as a minimum, at the largest scale feasible. The plans or any portion thereof involving engineering, shall be certified by a professional engineer or landscape architect as required by SJRWMD. The following information must be included on the site plan:

    General Information

    X a. Name of project.

    X b. General statement of intended use of site.

    X c. Legal description of the property and size of parcel in acres or square feet.

    X d. Name and address of owner.

X e. Name, address and phone number of owner's agent.

X f. Name, address, signature and registration of the professionals preparing the plans.

X g. Date, north arrow and scale shall be designated and where appropriate, the same scale shall be used on all sheets.

X h. Vicinity map showing relationship of proposed development to the surrounding streets and thoroughfares, shall be at a scale no smaller than one inch equals five thousand two hundred eighty feet (1" = 5,280' or 1" = Mile).

X i. Linear dimensions of the site.

X j. Existing topography with a maximum of one (1) foot contour intervals for the proposed site.

X k. Finished grading elevations.

X l. Zoning of the site and of all adjacent parcels.

X m. All existing and proposed building restriction lines (i.e., highway setback lines, easements, covenants, rights-of-way and building setback lines).

X n. Percent of open space of site.

X o. Location of proposed signs.

Building and Structure

X a. Existing and proposed structures.

X b. Intended use.

X c. Number of stories.

X d. Height of building(s).

N/A e. Number of dwelling units and density.

X f. Projected number of employees, if applicable.

N/A g. If restaurant, show number of seats and occupancy load.

X h. Square footage for proposed development, i.e., gross square footage, nonstorage area, square footage of each story, gross square footage of sales area, etc.

X i. Photograph or sketch of proposed sign with dimensions and material type.

Street, Sidewalks, Driveways, Parking Areas and Loading Spaces

X a. Engineering plans and specifications for streets, alleys, sidewalks and driveways to include soil borings, if necessary.

X b. All parking spaces delineated.

X c. Number of parking spaces.

X d. Number and location of handicapped spaces.

X e. Number of square feet of paved parking and driveway area.

X f. Surface materials and cross-section of proposed paved areas.

X g. Fire lanes per the Standard Fire Prevention Code adopted in the Building and Fire Codes chapter.

X h. Description/location of proposed driveway(s) and median cut(s).

X i. Internal traffic control circulation plan, including directional arrows and signs to direct traffic flow, as necessary.

X j. Location of traffic-control signs and signalization devices, if required.

X k. Number and location of required loading spaces.

X i. Number and location of required bicycle spaces.

Drainage and Stormwater

X a. Soil classifications, cross-sections and details of proposed retention/detention ponds, swales, berms, etc., as required by SJRWMD.

X b. Size, material and location of stormwater structures and pipes.

X c. Indicate flood elevation for 100-year flood and any other information required in Environmental Regulations chapter.

Proposed Water, Sewer and Solid Waste Facilities

X a. Size, material, specifications and location of water mains, valves, services and fire hydrants.

X b. Size, material, specifications and location of sanitary sewer lines and laterals with submittal of a profile, if necessary.

N/A c. Size and location of septic tank and drainfield, if applicable.

N/A d. Grease separation system, if applicable: Size, location and materials.

X e. Location(s) and access provisions for refuse service, including pad, screening, fencing and landscaping, if applicable.

Landscaping

X a. Landscaping plan and provisions for maintenance including size, type and location of all landscaping, screens, walls, fences and buffers per the requirements in the Landscaping and Tree Protection chapter. If water efficient landscaping is used, the information required in that chapter should be included.

X b. Irrigation system plan.

Environmental Protection

N/A a. Natural features such as waterbodies, wetlands, native vegetative communities, etc., as required in the Environmental Regulations chapter.

N/A b. Conservation easements per the requirements.

X c. Provisions for the adequate control of erosion and sediment, including the location and description of the methods to be utilized during and after all phases of clearing, grading and construction.

ADDITIONAL INFORMATION TO BE PROVIDED

X a. Summary report of all concurrency data needed as noted in Chapter 4 of the Lady Lake Land Development Regulations.

TOWN OF LADY LAKE
APPLICATION FOR SITE PLAN REVIEW
Page 6

X b. Drainage calculations as required in the Stormwater Management chapter.

X c. Fire flow calculations, if applicable.

X d. Lift station calculations, where required.

___ e. Copy of HRS permit, where required.

X f. A construction cost estimate prepared by the engineer of record, which shall delineate any proposed improvements to be maintained by the Town.

X g. Environmental assessment per the requirements, if applicable.

___ h. Any additional data, maps, plans or statements, as may be required, which is commensurate with the intent and purpose of the Code.

Signature of Applicant

PLEASE SUBMIT APPLICATION TO THE GROWTH DEVELOPMENT DEPARTMENT ACCOMPANIED BY EIGHT (8) COPIES OF THE SITE PLAN AND FOUR (4) 11 X 17 (SIGNED AND SEALED IF REQUIRED), APPROPRIATE REVIEW FEES, PROOF OF OWNERSHIP AND ALL APPLICABLE INFORMATION AND DOCUMENTATION AS REQUIRED BY LADY LAKE ORDINANCE 94-08, LAND DEVELOPMENT REGULATIONS, ADOPTED AUGUST 15, 1994.

Office Use:
Date Application Received: 10-20-14 Received by: Witten

Fees Paid:
Site Development Plan - Minor ___
Site Development Plan - Major up to 100,000 sq. ft ___
Site Development Plan - Major 100,001 sq. ft. and up ___

Major Site Plan, $5870.00

Concurrency, Commercial Design Standards

OWNER'S AFFIDAVIT

STATE OF FLORIDA
COUNTY OF LAKE

Before me, the undersigned authority, personally appeared Donovan Anderson, who being by me first duly sworn on oath, deposes and says:

(1) That he/she is the fee-simple owner of the property legally described on page one of this application.

(2) That he/she desires approval for:

Site Plan

(3) That he/she has appointed Greg Beliveau to act as agent in his/her behalf to accomplish the above. The Owner is required to complete the APPLICANT'S AFFIDAVIT of this application if no agent is appointed to act in his/her stead.

D. Anderson, President - Village Veranda at Lady Lake LLC.
Affiant (Owner's Signature)

The foregoing instrument was acknowledged before me this 18th day of September 2014, by Donovan Anderson, who is personally known to me ~~or who has produced~~ _____ as identification and who did (did not) take an oath.

Linda Plotnick
Notary Public

LINDA PLOTNICK
Notary Public - State of Florida
My Comm. Expires Oct 28, 2015
Commission # EE 141505

NOTE

All applications shall be signed by the owner of the property, or some person duly authorized by the owner to sign. This authority authorizing a person other than the owner to sign must be attached.

APPLICANT'S AFFIDAVIT

STATE OF FLORIDA
COUNTY OF LAKE

Before me, the undersigned authority, personally appeared Greg Beliveau, who being by me first duly sworn on oath, deposes and says:

(1) That he/she affirms and certifies that he/she understands and will comply with all ordinances, regulations, and provisions of the Town of Lady Lake, Florida, and that all statements and diagrams submitted herewith are true and accurate to the best of his/her knowledge and belief, and further, that this application and attachments shall become part of the Official Records of the Town of Lady Lake, Florida, and are not returnable.

(2) That he desires approval for:

Site Plan

(3) That the submittal requirements for the application have been completed and attached hereto as part of this application.

Affiant (Applicant's Signature)

The foregoing instrument was acknowledged before me this 15 day of October, 2014, by Greg A. Beliveau, who is personally known to me or who has produced _____ as identification and who did (did not) take an oath.

Sherie D. Lindh
Notary Public

SHERIE D LINDH
MY COMMISSION # EE868069
EXPIRES January 23 2017
(407) 398-0153 FloridaNotaryService.com

Property Record Card

General Information

Alternate Key:	1699100	**Parcel:**	28-18-24-000100000301
Owner Name:	VILLAGE VERANDA AT LADY LAKE LLC	**Millage:**	00LL (Lady Lake) : 17.6629
Owner Address:	C/O DAVID A BEALE ESQ 55 SE 2ND AVE STE 301 DELRAY BEACH, FL 33444	**Property Location:**	LADY LAKE FL 32159
Legal Description:	FROM NE COR OF SW 1/4 OF NE 1/4 RUN N 89-46-08 W ALONG N | BOUNDARY OF SW 1/4 OF NE 1/4 A DIST OF 741.54 FT TO A POINT | ON SAID E'LY R/W LINE OF HWY 27 & 441, S 23-16-50 E ALONG | SAID R/W LINE A DIST OF 637.86 FT FOR POB, RUN S 89-48-40 E | 819.07 FT TO E BOUNDARY LINE OF W 1/4 OF SE 1/4 OF NE 1/4, S| 0-08-30 W ALONG SAID E LINE OF W 1/4 OF SE 1/4 OF NE 1/4 A | DIST OF 504.50 FT, N 89-48-40 W 600.45 FT TO A POINT ON SAID| E'LY R/W LINE OF HWY 27 & 441, N 23-16-50 W ALONG SAID E'LY | R/W LINE 550 FT TO POB | ORB 4350 PG 661 |		

Land Data

Line	Land Use	Frontage	Depth	Notes	No. Units	Type	Class Value	Just Value
1	VACANT COMMERCIAL (1000)	0	0		8.22	AC	$0.00	$230,160.00

Miscellaneous Improvements

There is no improvement information to display.

Sales History

O.R. Book / Page	Sale Date	Instrument	Q/U	Vac./Imp.	Sale Price
1181 / 1985	8/1/1992	PR	M	V	$1.00
1810 / 1538	4/5/2000	QC	M	V	$1.00
3237 / 337	7/27/2006	WD	M	V	$1.00
4350 / 661	7/8/2013	WD	U	V	$698,700.00

Value

Total Just Value:		$230,160.00
Assessed Value:	=	$230,160.00
Total Exempt Value:	-	$0.00
Total Taxable Value:	=	$230,160.00
Millage Rate: ?	x	0.0176629
Base Ad-Valorem Tax:	=	$4,065.29

Non-Exempt School Levies:	+	$0.00
Estimated Ad-Valorem Tax:	=	$4,065.29

* The just values are NOT certified values and therefore are subject to change before being finalized for ad valorem assessment purposes. The amounts shown may not include all exemptions. The estimated tax totals do not reflect Non-Ad Valorem assessments. (Fire Fees, Solid Waste, etc.) Please consult the Tax Collector for actual taxation amounts.

Truth In Millage (TRIM) Notice

- Notice of Proposed Property Taxes & Proposed or Adopted Non-Ad Valorem Assessments

Copyright © 2014 Lake County Property Appraiser. All rights reserved.

Wendy Then

From: Greg Beliveau <gregb@lpgurp.com>
Sent: Monday, February 09, 2015 12:54 PM
To: Wendy Then
Cc: Jill Lanigan (jlanigan@songandassociates.com)
Subject: FW: Glass Transparency requirement

Wendy additional clarification for waiver.

Greg A. Beliveau, AICP

LPG Urban & Regional Planners, Inc.
1162 Camp Avenue, Mount Dora, Florida 32757
Office: (352) 385-1940 / Fax: (352) 383-4824

email - GregB@LPGURP.com
http://floridalandplanner.com/

From: Jill Lanigan [mailto:jlanigan@songandassociates.com]
Sent: Monday, February 09, 2015 12:52 PM
To: Greg Beliveau
Subject: Re: Glass Transparency requirement

Greg, Glass will be transparent but tinted for privacy, energy efficiency and to control heat gain. I will get some back up info for this but FYI... The new edition of the Florida building code set to take effect in June is very restrictive about the amount of glass and level of UV tint required.

Sent from my iPhone

On Feb 9, 2015, at 12:42 PM, Greg Beliveau <gregb@lpgurp.com> wrote:

> Yes we are seeking a waiver due to the fact that this use requires privacy to the residents of the units and if we do not provide the proper reflective glass this is not achieved. We are a use for ACLF and ALF and patient care as well, so privacy is very important in what we have to maintain.

Greg A. Beliveau, AICP

<image003.jpg>

email - GregB@LPGURP.com
http://floridalandplanner.com/

From: Wendy Then [mailto:wthen@ladylake.org]
Sent: Monday, February 09, 2015 12:37 PM
To: Greg Beliveau
Subject: Glass Transparency requirement

Good Afternoon Greg,

As per Town of Lady Lake Land Development Regulation, Chapter 20, Section 20-3C).6).A). requires that:

A) Glass shall be transparent, without color, except for appropriate stained or art glass. The use of darkly tinted or reflective glass on windows or doors is prohibited. Reflective glass will be defined as having a visible light reflectance rating of fifteen (15) percent or greater and darkly tinted glass windows include glass with a visible light transmittance rating of thirty-five (35) or less. All plans submitted to the Town shall include the glass manufacturer's visible light reflectance and visible light transmittance ratings for evaluation. Glass block is not considered transparent and is not permitted in storefront windows.

Please confirm you are requesting waiver and provide a brief justification. Thanks.

Note: Our office hours are 7:30 a.m. to 6:00 p.m.

Wendy Then, CFM
Town Planner
Town of Lady Lake
409 Fennell Blvd.
Lady Lake, FL 32159
352-751-1582
352-751-1514- Fax
Wthen@ladylake.org

Fla. Stat. 668.6076 "Under Florida law, e-mail addresses are public records. If you do not want your e-mail address released in response to a public-records request, do not send electronic mail to this entity. Instead, contact this office by phone or in writing."

Please think before you print.

No virus found in this message.
Checked by AVG - www.avg.com
Version: 2014.0.4800 / Virus Database: 4257/9083 - Release Date: 02/09/15

No virus found in this message.
Checked by AVG - www.avg.com
Version: 2014.0.4800 / Virus Database: 4257/9083 - Release Date: 02/09/15

TECHNICAL REVIEW COMMITTEE COMMENTS
FINAL COMPLETE REVIEW 2/19/2015

Project: Village Veranda- Major Site Plan- MJSP 10/14-002

Proposal: Final Round of Complete Comments for Site

Description:

On 10/20/2014, Town Staff received an application for a New Major Site Plan proposing a facility including three (3) outparcels with Office and Clinic space and a proposed Multi-story Building for an Assisted Living and Memory Care Facility, to be erected along South Hwy 27/441, identified by Alternate Key number 1699100. The site plan was reviewed to determine if it is in compliance with the Land Development Regulations (LDRs) including parking, setbacks, landscaping, engineering, environmental protection and commercial design standards.

The subject area reviewed is approximately 8.22 +/- acres and is located just north of the Too Your Health Spa (V) project, approximately 260 lineal feet north of the intersection of Hartsock Sawmill Road and South Highway 27/441. The property is zoned "CP" (Planned Commercial); which permits development and construction of the proposed improvements in accordance with adopted CP Memorandum of Agreement Ordinance 2013-06. The requested uses are consistent with the directives of the Comprehensive Plan, adopted Land Development Regulations, and ordinance 2013-06.

GENERAL INFORMATION

The engineering plans submitted, consisting of sixteen (16) sheets, are drawn on 24"x36" sheets and certified by Kenneth R. Wicks, **Professional Engineer with Wicks Engineering Services, Inc.,** dated January 12, 2015. The Landscaping Plans submitted, consisting of three (3) sheets, are drawn on 24"x36" sheets and certified by L.R. Huffstetler III, **Landscape Architect with LPG Urban & Regional Planners, Inc.,** dated December 4, 2014.

Below are staff comments from the Town of Lady Lake regarding your development project. A hard copy via hand delivery and an electronic copy via e-mail are provided to the applicant. Comments are organized by department and must be sufficiently addressed before the proposal may proceed

Following submittal of any required revisions and responses, correspondence will be forwarded indicating the proposal's status, either: (1) requiring additional revision or documentations; or (2) ready for approval. Site plans are subject to public hearing, as well as plats, annexation requests, zoning requests, and comprehensive plan requests. When applicable, you will receive written notification that the item is scheduled for review by the Planning and Zoning Board or Town Commission. For additional information, contact Thad Carroll at (352) 751-1521.

GROWTH MANAGEMENT

Questions may be directed to Wendy Then, at wthen@ladylake.org

1. All comments under the GM Review satisfied on 2-9-2015.

POLICE

Questions may be directed to Chief Chris McKinstry at cmckinstry@ladylake.org

1. No comments at this time from the Police Dept. regarding this project.

FIRE

Questions may be directed to Kerry Barnett, Fire Inspector at 813-778-4981 or k-15122@peoplepc.com

1. Final satisfied comments dated 02-17-2015.

BUILDING

Questions may be directed to Dallas Foss, Building Official at dfoss@usanova.com.

1. Final satisfied comments dated 02-19-2015.

PUBLIC WORKS

Questions may be directed to Butch Goodman, Utilities Supervisor at bgoodman@ladylakepw.org

1. Lady Lake Public Works Final satisfied comments dated 01-28-2015.

ENGINEERING CONSULTANT

Questions may be directed to Chris Schultz, P.E., at chris.schultz@neel-schaffer.com

1. Final satisfied comments dated 02-18-2015.

LAKE-SUMTER MPO

Questions may be directed to Pam Richmond, at PRichmond@LakeSumterMPO.com or at 352-315-0170

1. Project satisfied by the Lake-Sumter MPO Office as per communication dated 2-6-2015.

NEEL-SCHAFFER
Solutions you can build upon

engineers
planners
surveyors
environmental scientists
landscape architects

February 18, 2015

Mrs. Wendy Then
Town of Lady Lake
409 Fennell Blvd.
Lady Lake, FL 32159

REFERENCE: NEW SITE PLAN – VILLAGE VERANDA AT LADY LAKE REVIEW NO. 5

Dear Mrs. Then;

Pursuant to your request, Neel-Schaffer, Inc. (NSI) has reviewed the revised plans for the above referenced project. Our efforts in reviewing the development documents focused on Civil Site, Traffic/Transportation, Stormwater Drainage, Sanitary Sewer, Water Supply, Landscaping and Erosion Control based on the standards provided in the Land Development Code Regulations (LDCR) of the Town of Lady Lake.

Based on our review of the revised pump station calculations from Wicks Engineering, NSI has found the development plans to be satisfactory and in compliance with the Lady Lake LDCR. Final approval is however contingent upon approval by FDOT for traffic operations and improvements within FDOT right-of-way. Should you need additional information, please do not hesitate to contact me at 407-647-6623.

Sincerely,

Steven R. Cockerham, P.E.
Senior Project Manager

2301 Lucien Way, Suite 300 • Maitland, FL 32751 • 407-647-6623 fax: 407-539-0575

Kerry Barnett Fire Safety Consulting

43951 CR 54E, Kathleen, FL 33849

Fire Safety Inspector
Kerry Barnett

Cell (813) 778-4981
E-mail: k-l5122@peoplepc.com

Plan Review #: 14-083D
Project: Site Plan (Village Veranda at Lady Lake)
Location: Lady Lake
Address of Job: Hwy 27/441
Pages: 2 Plus Comment Sheet and Flow Test

Review For: Wicks Engineering Services
Contact: Kenneth Wick
Telephone: 352-343-8667

February 17, 2015

I have received and reviewed the submitted revised plans for an area consisting of assisted living facility, memory care, and business space considered a mixed use complex. Review was completed for compliance with the Florida Fire Prevention Code, Lady Lake Land Development Code and any other applicable codes, standards, rules, and statutes. Comments pertaining to this review are noted below, with the newest in bold. Plans are approved at this time to move forward. If anyone has any questions, please contact me at your convenience.

1. At this time this authority is unable to determine required fire flow. Building construction type (based on Table 18.4.5.1.2 of NFPA 1) shall be submitted for each building. Fire flow shall be figured for each building. Based on the flow, the number of hydrants can be determined. Also, give the total square footage of each attached building (Phase II – 3 story and 1 story) to the primary assisted living facility. The scale of 1" equals 40 ft does not appear to match the square footage labeled on these buildings. Fire flow for that building has to include the total square footage for the Phase II buildings. Total square footage of each building has been noted. Building construction type still needs to be submitted to determine fire flow. As much as 1800 gpm's may be required for 4 hours (as a sprinklered building). No fire flow has yet been completed, nor has the building construction type been noted in order to figure the flow amount required. Flow test is being completed but was not submitted as part of this review. Based on the Type 2 construction type 3750 gallon fire flow at 20 psi residual is required for 3 hours. This is based on the largest square foot building. However, all building being constructed with a fire sprinkler system, therefore a 75% reduction is allowed, thus giving a fire flow 938 gallons. Code does not allow any less than 1000 gallons. Therefore 1000 gpm at 20 psi residual is the flow required. That flow should not be an issued to obtain. Provide copy to the Town of flow. This comment is assumed satisfied unless the flow comes in under 1000. **Flow test conducted. Flow at 20 psi exceeds the minimum requirement of 1000 gpm's. Comment satisfied.**
2. Hydrant spacing shall be at intervals of 500 feet per Lady Lake Land Development Code, Chapter 14. Hydrants shall continue that spacing around the building access roads. Easiest to place hydrants at entrance and end of access road on north side then place hydrants in between at the required spacing. System should be looped to provide maximum efficiency. Based on spacing, a minimum of 5 hydrants will be required. System is not looped around main building causing a long dead end fire protection main. It is only an additional 200 ft. The hydrant at the end of the dead end may not produce the required water flow needed without the system being looped. It is noted that adequate number of hydrants have been added. The hydrant located at the dead end shall be checked due to proximity to parking space. 7.5 ft is required to sides and front of hydrant. System is now looped. Distance to hydrant was noted. Comment satisfied
3. Conduct a flow test. Ensure flow test is scheduled with Lady Lake Utilities. Lady Lake LDC allows 1000 gpm's maximum credit for a hydrant. Provide documentation of flow test to this authority. No flow test submitted. No flow test submitted with latest submittal. It has been scheduled to be completed this week. Water flow required based on construction and square footage of largest building with sprinkler reduction is 1000 gpm. Flow should not be an issue. Provide copy to town of fire flow. Comment is assumed satisfied.

4. Fire lane markings and signage shall be provided at main accesses of the buildings, hydrant locations, and FDC locations. See NFPA 1 Handbook, Chapter 18 for examples. Show this on the plans. Fire lane markings have been provided, however no marking and signage has been shown at hydrant locations. FDC location is TBD on the buildings and additional markings will be required at those locations also. Fire lane markings for the hydrant locations have been noted on the plan. Per Chapter 18 signage and/or markings shall be at 60' intervals which

allows the apparatus in and out of the hydrant location. Spaces currently are 20'. Markings need to extend at least 20' to each side of hydrant for a total of 40'. In the areas where it is on a curved landscaping island, the entire curve part shall be marked. No need to resubmit, a letter may acknowledge that those locations will be extended to the 40'.**Fire lane markings will be extended. Comment satisfied.**

5. Ensure the turnaround located on the north side of the main assisted living facility meets the requirements of NFPA 1 Chapter 18. The handbook will also provide examples. Apparatus turn around appears adequate. Comment satisfied.
6. Water main shall have two (2) tracer wires attached, not one. Plans still indicate one. After consideration, this will be allowed since metallic tape is also being used. Comment satisfied.
7. Ensure joints of water main are protected by wrapping or applying a protective sealer. Did not see in plans (Page 5 as indicated) as this is typically informational. Comment is assumed satisfied but will be checked during inspection process.
8. FDC's for each building are shown on the backflow. The preferred method is either on the building or a stand alone. When FDC line is pressurized it applies to much pressure against the backflow preventor. Notation has been made that FDC's will be located on the building. Comment satisfied.
9. Each backflow preventor shall have tamper switches installed and tied to the fire alarm system that will be required based on the fire sprinkler systems being installed. Noted on plans. Comment satisfied.
10. Ensure blue hydrant markers are installed per Lady Lake LDC. Noted on plans Comment satisfied.
11. FDC and Backflow preventor shall be painted red indicating fire protection. Acknowledged by engineer, comment satisfied.

Inspections Required:

1. Site Final

Note: Underground will be inspected under the separate permit.

Kerry Barnett

KERRY BARNETT, Fire Safety Inspector & Plans Examiner

***Please be advised this review of plans submitted is a cursory review to assist the contractor in compliance with applicable fire safety codes. This review is not intended to be a final approval of the submitted plans. It is the contractor's sole responsibility to ensure that the plans are in complete compliance with all applicable NFPA codes State Statutes and local ordinances. In the event that further examination or site inspection reveals areas of non-compliance, it shall be the contractor's sole responsibility, at their sole expense to bring those areas in compliance. Kerry Barnett Fire Safety Consulting assumes no responsibility for the contractor's failure to be in compliance with all applicable NFPA codes, State Statutes and local ordinances.

Wendy Then

From: Beck, Christopher <CBeck2@wm.com>
Sent: Tuesday, January 13, 2015 10:33 AM
To: Wendy Then
Subject: RE: Dumpster Detail for Village Veranda

Wendy,

The revised detail drawings for dumpster enclosures are what WM needs.

Thank you for your help.

Chris Beck
Wildwood Hauling
352-330-4546
352-267-9356

From: Wendy Then [mailto:wthen@ladylake.org]
Sent: Tuesday, January 13, 2015 10:29 AM
To: Beck, Christopher
Subject: RE: Dumpster Detail for Village Veranda

Good Morning Chris,

Please see attached the revised plans for Village Veranda and the proposed dumpster. Thanks.

From: Beck, Christopher [mailto:CBeck2@wm.com]
Sent: Wednesday, January 07, 2015 1:01 PM
To: Wendy Then
Subject: RE: Dumpster Detail for Village Veranda

Hi Wendy,

The sizes of the enclosures for the dumpsters are too small, for a single dumpster the size needs to be 12' wide by 12' deep and for a double dumpster it needs to be 24' wide by 12' deep with gates hung on the outside of enclosure.

Thanks,

Chris Beck
Wildwood Hauling
352-330-4546
352-267-9356

From: Wendy Then [mailto:wthen@ladylake.org]
Sent: Wednesday, January 07, 2015 11:59 AM
To: Beck, Christopher
Subject: Dumpster Detail for Village Veranda

Good Afternoon Mr. Beck,

Please see attached the provided details for the proposed dumpsters for the Village Veranda project.

Let me know if you have any issues accessing the file. Thanks.

Note: Our office hours are 7:30 a.m. to 6:00 p.m.

Wendy Then, CFM
Town Planner
Town of Lady Lake
409 Fennell Blvd.
Lady Lake, FL 32159
352-751-1582
352-751-1514- Fax
Wthen@ladylake.org

Fla. Stat. 668.6076 "Under Florida law, e-mail addresses are public records. If you do not want your e-mail address released in response to a public-records request, do not send electronic mail to this entity. Instead, contact this office by phone or in writing."

Please think before you print.

Recycling is a good thing. Please recycle any printed emails.

Wendy Then

From: qaeman <qaeman@aol.com>
Sent: Thursday, February 19, 2015 1:42 PM
To: Wendy Then
Subject: Village Veranda

The city engineer hss approved the lift station which clea r a my earlier comment. No further comments are being submitted for thus project at this time.

Dallas Foss
Town of Lady Lake
Building Official

Sent from my Verizon Wireless 4G LTE smartphone

Wendy Then

From: Richmond, Pamela <prichmond@lakesumtermpo.com>
Sent: Friday, February 06, 2015 5:26 PM
To: Wendy Then
Cc: Marcondes, Olga
Subject: Village Veranda of Lady Lake LLC Traffic Study Review

Wendy,

I have reviewed the traffic study submitted to support approval of the Village Veranda of Lady Lake located on the northeast quadrant of the US 27 and Hartsock Sawmill Road intersection in the Town of Lady Lake. The project consists of three components - a 130-bed continuing care retirement facility, a 6,000 square foot adult day care, and a 4,000 square foot medical clinic which will serve/support the residents of the continuing care retirement facility. The project will most likely be developed in two or three phases. The traffic study considered the impacts of the entire project.

The methodology originally submitted was amended after a conversation with MPO staff regarding the phasing and trip generation. A revised methodology is not attached to the traffic study, however, the traffic study reflects the agreed upon changes to the original methodology letter.

I have verified the trip generation calculations and project traffic distribution and find the information matches the approved methodology and is accurate. I am somewhat in disagreement with an internal capture rate of 85% used in the study simply because it is an unusually high number. However, given the land uses and the assumption that the medical office and medical clinic on the site are primarily for the clients of the adult day care facility, the internal capture rate seems reasonable.

Just for an additional layer of assurance, I looked at a scenario with 0% internal capture using the trip generation and distribution provided in the traffic study and verified that sufficient capacity is available on the study roadway segments to accommodate the project under what can be considered the worst case scenario.

Site access is acceptable as documented in the study. The traffic study analyzed the site assuming access to the site will be from US 27 via right-in/right out only. Stub-outs from this site to the sites adjacent to the north and south will be provided for future development by others per the Town of Lady Lake requirements.

If you have questions about my review, please contact me via phone or email at your convenience.

Pamela Richmond, AICP
Lake~Sumter MPO

Wendy Then

From: Butch Goodman <bgoodman@LadyLakePW.org>
Sent: Wednesday, January 28, 2015 2:11 PM
To: Wendy Then
Cc: CT Eagle; Robert Barnes
Subject: FW: Village Veranda Utility Quote
Attachments: 20150113_115237.pdf

Utility Quote and Utility Comments Remain the Same at this time.

Thank you

Thomas " Butch" Goodman
Town of Lady Lake
Utilities Supervisor
136 Skyline Dr.
Lady Lake, Fl 32159
Phone: 352-751-1513
Fax: 352-751-1594
bgoodman@ladylakepw.org

ATTENTION: The new operating hours for the Public Works Department as of October 7th, 2013 will be Monday-Thursday, 7:00AM - 6:00PM. Offices will be closed on Friday's.
Please note: Under Florida law (Fla.Stat. 668.6076 - effect. 07-01-06), e-mail addresses are public records. If you do not want your e-mail address released in response to a public-records request, do not send electronic mail to this entity. Instead, contact this office by phone or in writing.

-----Original Message-----
From: Butch Goodman
Sent: Tuesday, January 13, 2015 12:20 PM
To: 'Wendy Then'
Cc: C.T. Eagle; Peggy Smith; Brenda Brock
Subject: Village Veranda Utility Quote

Village Veranda 17 Water and 17 Sewer E.R.Us Reuse is not available at this time, The Water and the Sewer Lines will Remain Private the Developer/Contractor will Purchase and install the Water Meters Neptune Radio Read R 900 i and the Required Back-flows for the project.

Please forward to anyone else that needs to get this information?

Thank you

Thomas " Butch" Goodman
Town of Lady Lake
Utilities Supervisor
136 Skyline Dr.
Lady Lake, Fl 32159
Phone: 352-751-1513

Fax: 352-751-1594
bgoodman@ladylakepw.org

ATTENTION: The new operating hours for the Public Works Department as of October 7th, 2013 will be Monday-Thursday, 7:00AM - 6:00PM. Offices will be closed on Friday's.
Please note: Under Florida law (Fla.Stat. 668.6076 - effect. 07-01-06), e-mail addresses are public records. If you do not want your e-mail address released in response to a public-records request, do not send electronic mail to this entity. Instead, contact this office by phone or in writing.

-----Original Message-----
From: Public Works [mailto:mfp6440@gmail.com]
Sent: Tuesday, January 13, 2015 11:53 AM
To: Butch Goodman
Subject: Scanned image from Public Works

Reply to: Public Works <psmith@ladylakepw.org> Device Name: Town Of Lady Lake Public Works Device Model: MX-2640N
Location: Lady Lake, FL

File Format: PDF (Medium)
Resolution: 200dpi x 200dpi

Attached file is scanned image in PDF format.
Use Acrobat(R)Reader(R) or Adobe(R)Reader(R) of Adobe Systems Incorporated to view the document.
Adobe(R)Reader(R) can be downloaded from the following URL:
Adobe, the Adobe logo, Acrobat, the Adobe PDF logo, and Reader are registered trademarks or trademarks of Adobe Systems Incorporated in the United States and other countries.

http://www.adobe.com/

Fla. Stat. 668.6076 "Under Florida law, e-mail addresses are public records. If you do not want your e-mail address released in response to a public-records request, do not send electronic mail to this entity. Instead, contact this office by phone or in writing."

Utility reserves the right to do site inspections and audits of said Water Facilities, Sewer Facilities, and Reuse Facilities at any given time without due notice to the Developer to determine if water, sewer, and reuse ERU allocations are correct. Based on the results of these audits and site inspections, Utility reserves the right to adjust amount of ERU allocations and assess applicable fees accordingly.

UTILITY QUOTE Residential ____ Commercial _X_ Irrigation ____ Reuse ____

Town of Lady Lake, 409 Fennell Boulevard, Lady Lake, Florida 32159 USA
Utility Customer Service (352) 751-1525 Public Works Administration (352) 751-1526

Project Name: Village Veranda Legal Street Address: Linden Ave. Alt Key # 1699100
Applicants Name: Greg Beliveau Phone Number352-385-1940
Notes: Bldg # 1= 9 ERU's, Bldg #2= 2 ERU's, Bldg # 3= 2 ERU's, Bldg #4= 4 ERU's

*Residential and Commercial Properties are required to meet standard specifications set by the Town. Commercial Properties are required to purchase and install a RPZ or a dual check backflow device depending on field inspection. Commercial Properties are required to complete water & sewer taps and install meters. Commercial Properties are required to purchase and install a Neptune Radio Read Meter with a meter box and curb stops. 4 Meter's.

TOTAL NUMBER OF ERU's 17 Total ERU's –Bldg's 1,2,3,4

				REV. CODE
IS MUNICIPAL WATER AVAILABLE?		X Yes	____ No	
IS MUNICIPAL SEWER AVAILABLE?		X Yes	____ No	
IS MUNICIPAL REUSE AVAILABLE ?		____ Yes	X No	
WATER IMPACT FEES	17 ERU's	1,499.00 each		
		Commercial	$ 25,483.00	WI
		Residential	$ ____	WR
WATER TAP IN FEE	____ TAP w/5/8" meter	505.00 each	$ ____	WT
WATER DEPOSIT:				
Commercial Owner	17 ERU's	100.00 each	$ 1,700.00	PD
Contractor	____ ERU's	150.00 each	$ ____	PD
Residential Owner	____ ERU's	75.00 each	$ ____	PD
METER INSTALLATION	____ TBD	325.00 each	$ ____	WM
WATER TURN ON FEE	4 FEE	25.00 each	$ 100.00	WC
WATER INSPECTION FEE	4 FEE	50.00 each	$ 200.00	WF
JACK AND BORE:				
Cost Plus Overhead	____	350.00 *estimate*	$ ____	JB
SEWER IMPACT FEES	17 ERU's	3,172.00 each		
		Commercial	$ 53,924.00	SI
		Residential	$ ____	SR
SEWER TAP IN FEE: Cost Plus Overhead		500.00 minimum	$ ____	ST
SEWER DEPOSIT:				
Commercial Owner	17 ERU's	100.00 each	$ 1,700.00	PD
Contractor	____ ERU'S	150.00 each	$ ____	PD
Residential Owner	____ ERU's	75.00 each	$ ____	PD
SEWER INSPECTION	1 FEE	50.00 each	$ 50.00	4G
REUSE IMPACT FEES	N/A ERU's	292.00 each		
		Commercial	$ N/A	R7
		Residential	$ ____	R8
REUSE DEPOSIT:				
Commercial Owner	____ ERU's	100.00 each	$ ____	PD
Contractor	____ ERU's	150.00 each	$ ____	PD
Residential Owner	____ ERU's	75.00 each	$ ____	PD
METER INSTALLATION	____ TBD	325.00 each	$ ____	WM
REUSE CONNECTION FEE	____ FEE	25.00 each	$ ____	R9
REUSE INSPECTION FEE	____ FEE	50.00 each	$ ____	4R
JACK AND BORE:				
Cost Plus Overhead	____	350.00 *estimate*	$ ____	JB
		TOTAL BALANCE DUE	$ 83,157.00	

Quote expires 180 days Date: 1/13/15
Quote by: 1-13-15 Verified by:

S:\QUOTES\QUOTES 2011-12 FY\UTILITY QUOTE FORM After June 24 2009 revised 11-2011.doc

Village Veranda

Linden Ave.

Meeting with Ted Wicks on January 9, 2015 at 10:00 am.

<u>ERU's Per the LDR's</u>

<u>ERU's</u>

5	Phase 1/ Building 1			3 = 60 Beds	90 Beds ÷ 20 = 4.5=5
				2 =30 Memory Care	
2	Phase 2/ Building 1			2 = 40 Beds ÷ 20 = 2	
2				20 Employees = 2 ERU's	
	Phase 3	Sq. Ft.		Sq. Ft.	
2	Bldg #2	6000	÷	3000 = 2 ERU's	
2	Bldg #3	4000	÷	3000 = 1.3 = 2 ERU's	
4	Bldg #4	12,000	÷	3000 = 4 ERU's	

17 Total ERU's Per LDR's 17 X 250 GPD = 4,250 G.P.D

Wendy Then

From: Land, Logan <Logan.Land@dot.state.fl.us>
Sent: Thursday, February 05, 2015 9:11 AM
To: Wendy Then
Cc: Dawson, Carlos
Subject: RE: Village Veranda Project

Hi Wendy,

Typically, traffic ops reviews projects that are routed to them after they are submitted through the local operations units. They are understaffed for the workload generated by projects from the nine counties that comprise district 5. I would advise the applicants to be prepared to construct the NB turn lane; however, the recommendation may be for less such as a 150' right turn taper or possibly not needed.

Hopefully this helps....
Thanks.

Logan Land
Permits Manager
Leesburg Operations
1405 Thomas Ave. Leesburg, Fl. 34748
(352) 326-7718 FAX (352) 326-7787
e-mail - logan.land@dot.state.fl.us

From: Wendy Then [mailto:wthen@ladylake.org]
Sent: Thursday, February 05, 2015 8:43 AM
To: Land, Logan
Cc: Dawson, Carlos
Subject: RE: Village Veranda Project

Good Morning,

Could you advise when the district traffic operations will make that final recommendation? If that change needs to be included in the plans, we would like to advise the applicant with enough time to make the adjustments and add the changes to try to keep the application schedule on track for the public meetings.

Thanks.

From: Land, Logan [mailto:Logan.Land@dot.state.fl.us]
Sent: Wednesday, January 28, 2015 2:45 PM
To: Wendy Then
Cc: Dawson, Carlos
Subject: RE: Village Veranda Project

Hi Wendy,

This will address the driveway aspects of the project. Our district traffic operations staff will have the final recommendation with regards to the NB right turn lane requirement. The applicant will need to apply for both a driveway and drainage connection permit before any proposed work can be conducted within FDOT right-of-way.

If you should have any questions please let me know.
Thanks.

Logan Land
Permits Manager
Leesburg Operations
1405 Thomas Ave. Leesburg, Fl. 34748
(352) 326-7718 FAX (352) 326-7787
e-mail - logan.land@dot.state.fl.us

From: Wendy Then [mailto:wthen@ladylake.org]
Sent: Wednesday, January 28, 2015 8:24 AM
To: Land, Logan
Subject: FW: Village Veranda Project

Good Morning Logan,

Please let me know if the submitted information satisfies your request for the Village Veranda project.

Thanks.

Note: Our office hours are 7:30 a.m. to 6:00 p.m.

Wendy Then, CFM
Town Planner
Town of Lady Lake
409 Fennell Blvd.
Lady Lake, FL 32159
352-751-1582
352-751-1514- Fax
Wthen@ladylake.org

Fla. Stat. 668.6076 "Under Florida law, e-mail addresses are public records. If you do not want your e-mail address released in response to a public-records request, do not send electronic mail to this entity. Instead, contact this office by phone or in writing."

Please think before you print.

From: Ted Wicks [mailto:tedwicks@wicksengineering.com]
Sent: Friday, January 09, 2015 8:53 AM
To: 'Land, Logan'; 'Greg Beliveau'
Cc: Wendy Then; 'Wicks Engineering, Inc. - Kay Henderson'
Subject: Village Veranda Project

Good Morning Logan,
I follow up to your comments to the Town on the Village Veranda Project, I have enclosed a copy of the TIA for the project. Please review the report and contact me if you have any questions or comments. Also, we have completed the drainage analysis for the project and a small portion of the project will discharge stormwater to the Departments system. Calculations and supporting informtion will be submitted for permitting with the Department. Thanks for your help.
Ted

If you should have any questions please let me know.
Thanks.

Logan Land
Permits Manager
Leesburg Operations
1405 Thomas Ave. Leesburg, Fl. 34748
(352) 326-7718 FAX (352) 326-7787
e-mail - logan.land@dot.state.fl.us

From: Wendy Then [mailto:wthen@ladylake.org]
Sent: Wednesday, January 28, 2015 8:24 AM
To: Land, Logan
Subject: FW: Village Veranda Project

Good Morning Logan,

Please let me know if the submitted information satisfies your request for the Village Veranda project.

Thanks.

Note: Our office hours are 7:30 a.m. to 6:00 p.m.

Wendy Then, CFM
Town Planner
Town of Lady Lake
409 Fennell Blvd.
Lady Lake, FL 32159
352-751-1582
352-751-1514- Fax
Wthen@ladylake.org

Fla. Stat. 668.6076 "Under Florida law, e-mail addresses are public records. If you do not want your e-mail address released in response to a public-records request, do not send electronic mail to this entity. Instead, contact this office by phone or in writing."

Please think before you print.

From: Ted Wicks [mailto:tedwicks@wicksengineering.com]
Sent: Friday, January 09, 2015 8:53 AM
To: 'Land, Logan'; 'Greg Beliveau'
Cc: Wendy Then; 'Wicks Engineering, Inc. - Kay Henderson'
Subject: Village Veranda Project

Good Morning Logan,
I follow up to your comments to the Town on the Village Veranda Project, I have enclosed a copy of the TIA for the project. Please review the report and contact me if you have any questions or comments. Also, we have completed the drainage analysis for the project and a small portion of the project will discharge stormwater to the Departments system. Calculations and supporting informtion will be submitted for permitting with the Department. Thanks for your help.
Ted

SPECIAL TOWN COMMISSION - CONCEPTUAL WORKSHOP AGENDA ITEM

REQUESTED SPECIAL COMMISSION MEETING DATE: February 18, 2015

SUBJECT: **Conceptual Presentation of Village Veranda at Lady Lake - A facility to be developed in three phases including three (3) outparcels with Office and Clinic with a total of 22,000 square footage of commercial spaces and a proposed Multi-story Building with 90 Assisted Living units and 40 Memory Care Facility units, to be erected along South Hwy 27/441, just north of the Too Your Health Spa (V) project (Alternate Key 1699100).**

DEPARTMENT: **Growth Management**

STAFF RECOMMENDED MOTION:

Staff recommends advancing the site plan as presented, granting the request for waiver to Chapter 20, Section 20-3C).6).A)., meeting all other site specifications as required per Town of Lady Lake Land Development Regulations and the provisions of the adopted memorandum of agreement Ordinance 2013-06.

On 10/20/2014, Applicant Gregory A. Beliveau with LPG Urban & Regional Planners on behalf of Village Veranda at Lady Lake, LLC, submitted an application for a Major Site Plan proposing a facility including three (3) outparcels with Office and Clinic space and a proposed Multi-story Building for an Assisted Living and Memory Care Facility, to be erected along South Hwy 27/441, identified by Alternate Key number 1699100. The site plan was reviewed to determine if it is in compliance with the Land Development Regulations (LDRs) including parking, setbacks, landscaping, engineering, environmental protection and commercial design standards.

The subject area reviewed is approximately 8.22 +/- acres and is located just north of the Too Your Health Spa (V) project, approximately 260 lineal feet north of the intersection of Hartsock Sawmill Road and South Highway 27/441. The property is zoned "CP" (Planned Commercial); which permits development and construction of the proposed improvements in accordance with the adopted CP Memorandum of Agreement of Ordinance 2013-06. The requested uses are consistent with the directives of the Comprehensive Plan, adopted Land Development Regulations, and Ordinance 2013-06.

Commercial Design Standard

Attached are the site plan and façade elevations for the Village Veranda at Lady Lake Facility:

In accordance with the Land Development Regulations, **Chapter 20, Section 20-3C).3).A)**. new buildings should adopt one of the four recommended architectural styles: Frame Vernacular, Craftsman/Bungalow, Mediterranean, or Mission. The Village Veranda at Lady Lake Facility building features the Frame Verna Style Design. The building exhibits:

- ✓ Steep Pitched Seam Metal Roof
- ✓ 5-bay pattern along the front of the Elevations
- ✓ Multi-Pane Sash Windows
- ✓ Multi-floor Windows align with first floor windows
- ✓ Wide Overhanging Towers
- ✓ Door Entrance Offset
- ✓ Pastel Family colors for Building Exterior Walls

As per **Chapter 20, Section 20-3C).6).A).**, Glass shall be transparent and reflective glass will be defined as having a visible light reflectance rating of fifteen (15) percent or greater and darkly tinted glass windows include glass with a visible light transmittance rating of thirty-five (35) or less. Applicant is requesting a waiver from **Glass Transparency** requirements.

Applicant's Justification: Due to the fact that this use requires privacy to the residents of the units and if we do not provide the proper reflective glass this is not achieved. We are a use for ACLF and ALF and patient care as well, so privacy is very important in what we have to maintain. In short, the glass will be tinted for privacy, energy efficiency, and to control heat gain.

Tree Requirements:

In accordance with Chapter 10-Landscape and Tree Protection, the site is required to provide 1315.2 tree caliper inches based on its .8.22-acre area (160"x 8.22). Please see the landscaping tree proposal breakdown:

Existing Trees to remain	1526 tree caliper inches
Proposed Canopy & Understory Trees	542 tree caliper inches
Total tree caliper inches	2068 tree caliper inches

The applicant is providing significantly more than the required on-site tree caliper inches.

Notes:

- No historic trees will be removed for this development.

Public Meetings:

The **Technical Review Committee** members individually reviewed the application on Thursday, February 5, 2014, and provided outstanding comments regarding the Site Plan application.

The **Town Commission** is tentatively scheduled to consider the Site Plan application on Monday, March 2, 2015 at 6:00 p.m.

FISCAL IMPACT: $0 [ ] Capital Budget
[ ] Operating
[ ] Other

ATTACHMENTS: [ ] Ordinance [ ] Resolution [ ] Budget

[X] Other – Site Plan

[ ] Support Documents/Contracts Available for Review in Manager's Office

---

(126) 2/9/15

DEPARTMENT HEAD		Submitted 2/9/15	Date
FINANCE DEPARTMENT		Approved as to Budget Requirements	Date
TOWN ATTORNEY		Approved as to Form and Legality	Date
TOWN MANAGER		Approved Agenda Item for: 2/18/15	Date 2/9/15

COMMISSION ACTION: CONSENSUS TO ADVANCE AS PRESENTED.

[ ] Approved as Recommended [ ] Disapproved

[ ] Tabled Indefinitely

[ ] Continued to Date Certain [ ] Approved with Modification

CC: THAD - G.M.

~~Mr. Carroll explained that the applicant will address these issues if the application is formally submitted, but that this is just a conceptual presentation for the proposed type of use.~~

~~Commissioner Holden asked how close the lots are to be from the property line and if the developer has proposed a buffer between the properties.~~

~~Mr. Beliveau replied they will have a buffer there, but the width of it has not been determined yet, but will comply with the Town's LDRs if they move forward with this project.~~

~~Daniel Patten of 3040 Hartsock Sawmill Rd. stated that he and his neighbor maintain a portion of Hartsock Sawmill Road because it was just a dirt road, and they put down millings. He stated he was told by code enforcement that he was not allowed to bring his tractor-trailer truck home because the road does not allow vehicles over 12,000 lbs. for parking. He asked how they would allow RVs in there to park.~~

~~Mr. Carroll confirmed that Mr. Patten's property is in the county, not within Town limits. As such, he stated the code enforcement issue is with the county, and if any improvements are required to be made to the road to allow RVs to use the road, the applicant would have to address them as part of their application if they move forward with the project.~~

~~Mr. Beliveau stated that they will have a meeting with the residents prior to submitting the application to the Town.~~

~~Commissioner Richards stated the issue at hand is the idea for an RV park in this area, and he is receptive to it. He stated that if there is no public easement, the applicant will need to do his homework regarding easements and public access, as the county may make them rebuild all of Hartsock Sawmill Road.~~

~~***It was the consensus of the Commission that they were in favor of the Conceptual Presentation for the Sawmill Holdings, LLC Site – Proposing an RV Park Consisting of 185 Units – Located off of Hartsock Sawmill Road; Approximately 1,490 Lineal Feet East of the Intersection of S. Hwy 27/441 as presented.***~~

7. Conceptual Presentation of Village Veranda at Lady Lake – Proposing a Facility to be Developed in Three Phases Including Three (3) Outparcels with Office and Clinic for a Total of 22,000 Sq. Ft. of Commercial Spaces, and a Proposed Multi-Story Building with 90 Assisted Living Units and 40 Memory Care Facility Units – Located on S. Hwy 27/441, Just North of the Too Your Health Spa (V) Project (Thad Carroll)

Growth Management Director Thad Carroll gave the background summary from the agenda item cover sheet which is on file in the Town Clerk's office. He stated that on October 20, 2014, applicant Gregory A. Beliveau with LPG Urban & Regional Planners, on behalf of Village Veranda at Lady Lake, LLC, submitted an application for a Major Site Plan proposing a facility including three outparcels with office and clinic space, and a proposed multi-story building for an assisted living and memory care facility to be erected along S. Highway 27/441 (Alternate Key #1699100). The site plan was reviewed to determine if it is in compliance with the Land Development Regulations (LDRs) including parking, setbacks, landscaping, engineering, environmental protection and commercial design standards.

DRAFT

Mr. Carroll reported the subject area is approximately 8.22 +/- acres and is located just north of the Too Your Health Spa (V) project, approximately 260 lineal feet north of the intersection of Hartsock Sawmill Road and S. Highway 27/441. The property is zoned "CP" (Planned Commercial), which permits development and construction of the proposed improvements in accordance with the adopted CP Memorandum of Agreement of Ordinance No. 2013-06. The requested uses are consistent with the directives of the Comprehensive Plan, adopted Land Development Regulations, and Ordinance No. 2013-06.

Commercial Design Standards: The site plan and façade elevations for the Village Veranda at Lady Lake facility were included in the packet. In accordance with the Land Development Regulations, Chapter 20, Section 20-3C).3).A)., new buildings should adopt one of the four recommended architectural styles: Frame Vernacular, Craftsman/Bungalow, Mediterranean, or Mission. The Village Veranda at Lady Lake Facility building features the Frame Vernacular Style Design. The building exhibits:

- ✓ Steep pitched seam metal roof
- ✓ Five bay pattern along the front of the elevations
- ✓ Multi-pane sash windows
- ✓ Multi-floor windows align with first floor windows
- ✓ Wide overhanging towers
- ✓ Door entrance offset
- ✓ Pastel family colors for building exterior walls

As per Chapter 20, Section 20-3C).6).A)., glass shall be transparent; reflective glass will be defined as having a visible light reflectance rating of 15% or greater and darkly tinted glass windows include glass with a visible light transmittance rating of 35 or less.

Mr. Carroll reported that the applicant is requesting one waiver from glass transparency requirements. He stated the applicant's justification states that this use requires privacy to the residents of the units and if the proper reflective glass is not provided, this is not achieved. It also states that they have a use for ACLF and ALF and patient care as well, so privacy is very important in what they have to maintain. In short, the glass will be tinted for privacy, energy efficiency, and to control heat gain.

The elevation drawings and landscaping plan were shown, as well as photos depicting the type of plant materials proposed for the project.

Tree Requirements: In accordance with Chapter 10-Landscape and Tree Protection, the site is required to provide 1315.2 tree caliper inches based on its .8.22-acre area (160"x 8.22). The landscaping tree proposal breakdown is as follows:

Existing trees to remain	1526 tree caliper inches
Proposed canopy & understory trees	542 tree caliper inches
Total tree caliper inches	2068 tree caliper inches

Mr. Carroll noted that the applicant is providing significantly more than the required on-site tree caliper inches. It was noted that no historic trees will be removed for this development.

Mr. Carroll stated the application was received on October 20, 2014. The Technical Review Committee members individually reviewed the application on Thursday, February 5, 2014, and

DRAFT

provided outstanding comments regarding the Site Plan application. The Town Commission is tentatively scheduled to consider the Site Plan application on Monday, March 2, 2015 at 6:00 p.m.

Mr. Carroll turned the presentation over to Mr. Beliveau.

Mr. Beliveau reviewed highlights of the project, reiterating that the only variance requested is for the privacy glass for the residents. He stated that this project has a connection to the spa next door per the memorandum of agreement, and they will be connecting to the spa's lift station for ease of access for sewer, but will be connecting to water from Highway 27/441. He stated they went with the vernacular architectural design after a request by staff to do something different. Mr. Beliveau stated that market studies show that the need for assisted living facilities in this area is awesome.

Mayor Kussard noted that there were commercial spaces available in addition to the assisted living and memory facilities. She asked Mr. Beliveau whether it would be for doctor's offices or retail.

Mr. Beliveau replied that the commercial buildings would strictly be medical (and adult day care) to augment the facility, and that there would be no retail.

Mr. Beliveau presented some three dimensional renderings of the project site and building elevations, which showed more detail and perspective.

Mayor Kussard confirmed with Mr. Beliveau that the memory care facility would be locked.

Commissioner Holden stated he liked this development and agreed there was a need for it, but voiced his concern regarding there not being an access road. He stated this is a perfect reason why the Town needs an ordinance regarding access roads as there should have been one from Hartsock Sawmill Road for both the spa and property to be developed to the north of it. He stated this is a problem as there will be a lot of traffic coming off of a six lane divided highway.

Mr. Carroll responded that per the development agreement by the owner of the Too Your Health Spa, he has provided a 24 ft. access prior to the construction of phase three and an access easement is available for passage to keep people off the highway.

It was the consensus of the Commission that they were in favor of the Conceptual Presentation of Village Veranda at Lady Lake – Proposing a Facility to be Developed in Three Phases Including Three (3) Outparcels with Office and Clinic for a Total of 22,000 Sq. Ft. of Commercial Spaces, and a Proposed Multi-Story Building with 90 Assisted Living Units and 40 Memory Care Facility Units – Located on S. Hwy 27/441, Just North of the Too Your Health Spa (V) Project as presented.

8. ADJOURN: There being no further discussion; the meeting was adjourned at 5:28 p.m.

Kristen Kollgaard, Town Clerk

Ruth Kussard, Mayor

Minutes transcribed by Nancy Slaton, Deputy Town Clerk

DRAFT

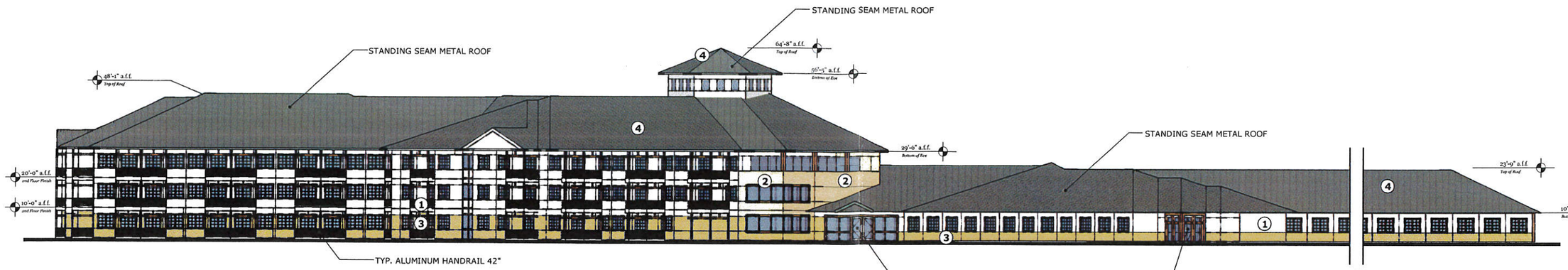

A/1 South Elevation
scale : 1/16" = 1'-0"

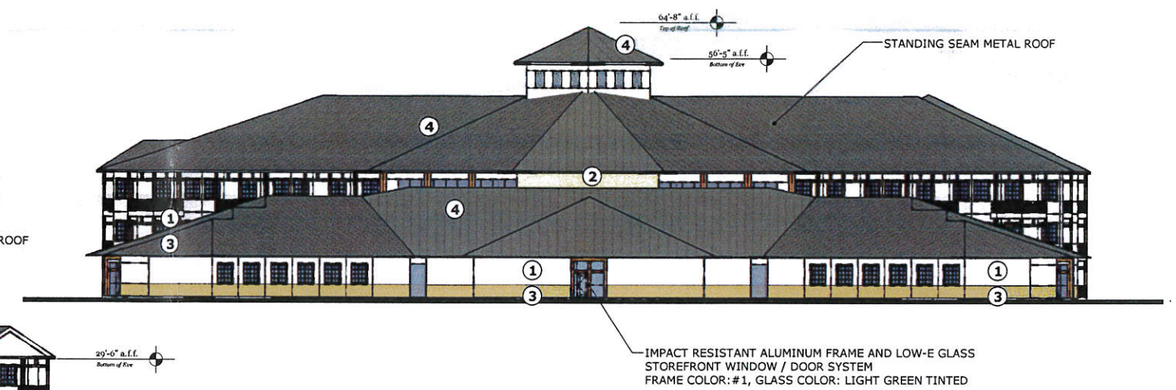

A/2 East Elevation
scale : 1/16" = 1'-0"

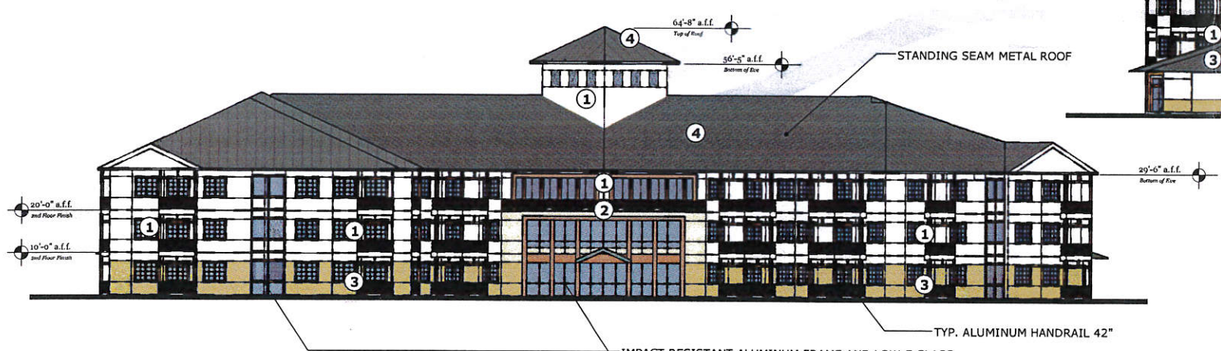

A/3 West Elevation
scale : 1/16" = 1'-0"

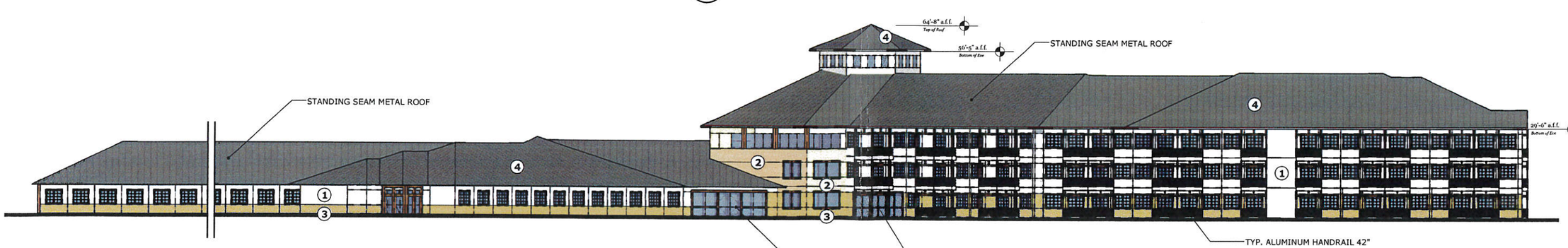

A/4 North Elevation
scale : 1/16" = 1'-0"

1	2	3	4
2140-70 MOUNTAIN PEAK WHITE BENJAMIN MOORE	OC-74 ONYX WHITE BENJAMIN MOORE	HC-23 YORKSHIRE TAN BENJAMIN MOORE	METAL ROOF

宋
Song + Associates
Architecture • Planning • Interior Design
400 Australian Ave S. 6th Floor
West Palm Beach, Florida 33401
Telephone: 561/655-2423
Fax: 561/655-1482
AA - 0003165 IB - 0001095

Seal :

Name :
License # :
Consultants :

Key Plan:

Revisions :

Date :
S+A Project No :
Owner Project No :
Drawn By : --
Checked By : --
Phase :

Sheet Title :

ELEVATIONS

Sheet # :

A -501

Village Veranda

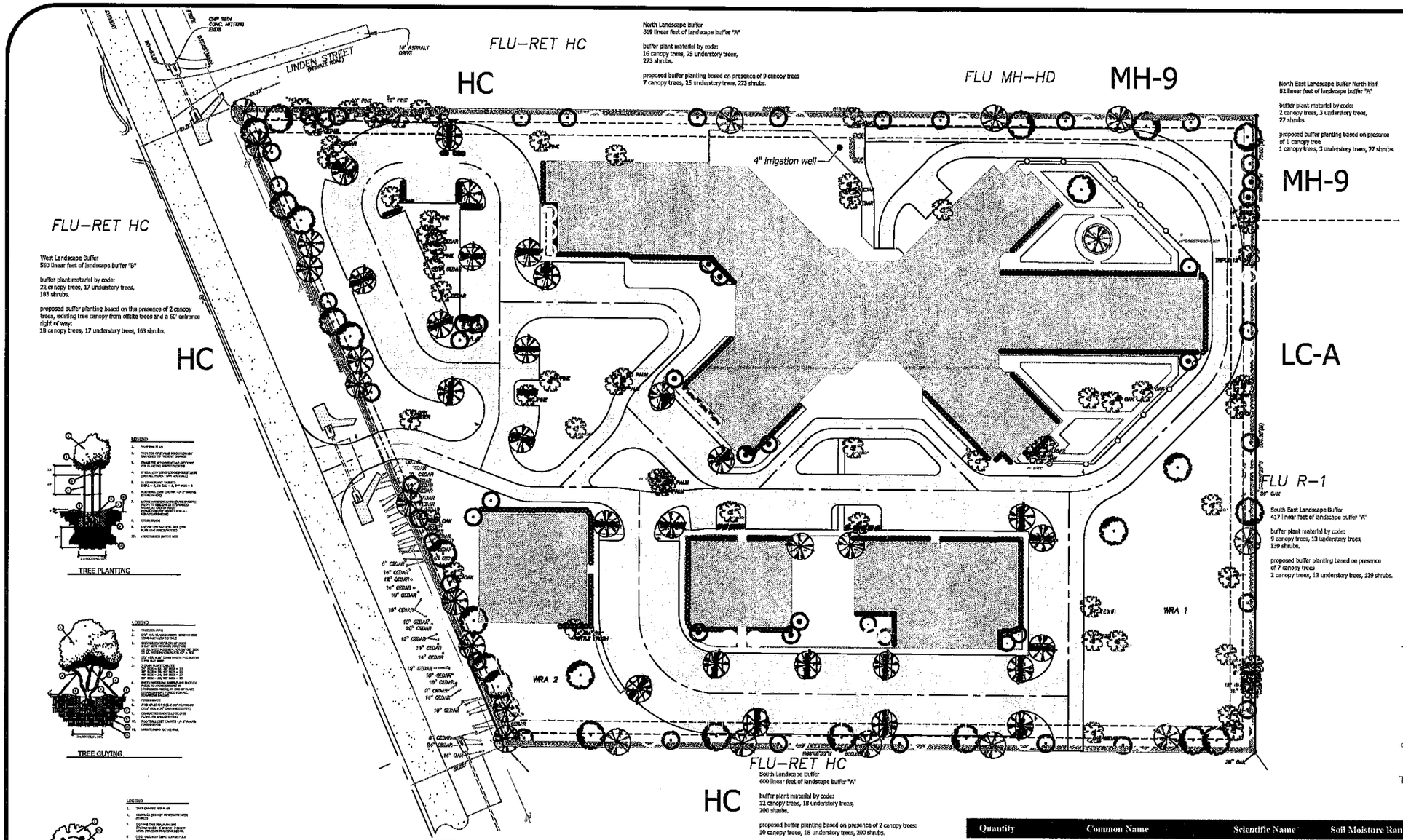

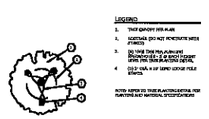

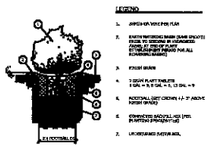

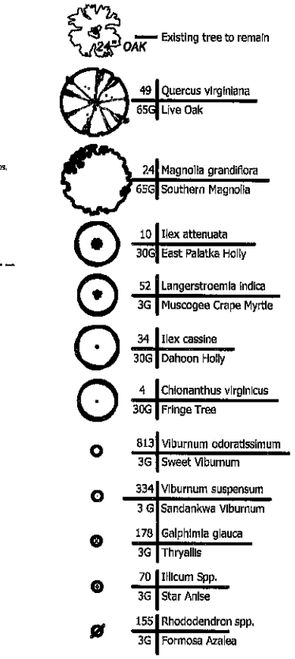

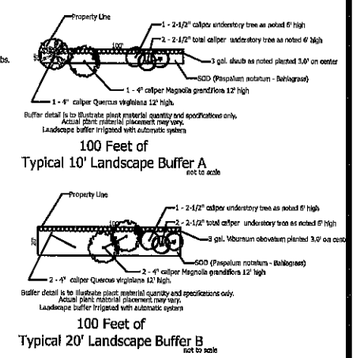

INSTALLATION AND MAINTENANCE NOTES

1. The work consists of the complete plant material installation as shown on the drawings and as herein specified This work shall include, but is not limited to, the supplying of all plant material specified, the furnishing of all labor, equipment, appliances and materials called for, and in performing all operations in connection with the landscape specifications as shown on this plan. Further, the work shall include the maintaining of all plants and planting areas until phase acceptance by the owner, and fulfilling of all guarantee provisions as herein specified.
2. Adjustments to planter beds as shown on plans may be necessary due to walk locations, berming, relationship to roadways, etc. Plant material may need to be added or subtracted in the field. The contractor shall be responsible for the final plant count upon completion of the job. The final plant count will be submitted to the owner prior to final payment.
3. The contractor shall fully acquaint themselves with the related site grading, water supply, electrical supply, and other utilities to preclude any misunderstanding and facilitate a trouble free installation.
4. No substitution shall be made without written permission of the owner.
5. In the event of a variation between the plant list and the number of plants shown on the plans, contact the Project Landscape Architect immediately.
6. Plant materials will be inspected at the job site by the owner. When inspected work does not comply with the specified requirements, the contractor shall replace rejected work and continue specified maintenance until the work is reinspected and found acceptable and remove rejected plants and materials from the job site within 48 hours.
7. All materials shall be installed in a neat and workmanlike manner. The owner or his landscape architect reserves the right to direct the removal and replacement of any items which, in his opinion, do not present an orderly and reasonably neat or workmanlike appearance, provided such items can be installed in an orderly way by the usual method of such work.
8. All plant material shall be Florida No. 1 grade or better as defined in "Grades and Standards for Nursery Plants", Parts 1 and 2, as published by the Florida Department of Agriculture and Consumer Services, and shall conform to ANN standards for nursery stock (ansi Z60, 1-1980).
9. All planting beds shall be mulched with 3" of pine bark nuggets, 100% organic, of the highest grade.
10. All trees 8' or larger shall be staked or guyed. Staking materials and methods shall be submitted to the Owner for approval prior to installation.
11. Planting soil shall consist of the existing soil two (2) lbs. of fertilizer per cubic yard, well mixed.
12. Fertilizer shall be quick release, water soluble and shall conform to the applicable state of Florida fertilizer laws. The contractor shall submit to the owner or landscape architect a fertilization certification.
13. All plants shall be watered thoroughly when planted.
14. Sod shall be well matted with grass roots. The sod shall be taken up in rectangles preferably 12" by 24", of 2" in thickness, and shall be reasonably free of weeds and other grasses and shall have a soil mat of sufficient thickness adhering firmly to the roots to withstand all necessary handling. The sod shall be shade kept moist until it is planted. Damaged sod will be rejected. Replanting shall be done within 48 hours after time of harvesting or kept damp until planted.
15. Sodding schedule:
    A. All lawn areas shall be planted with with a species specified by the Owner (limits determined by C
    B. Soft spots and inequalities in grade shall be corrected before starting work.
    C. Lay sod without voids. Thoroughly water after planting. The surface shall be true to finish grade lines and even and firm at all points.
    D. Place sod with staggered joints closely butted, tamped or rolled to an even surface Erosion control measures are mandatory in swales, rights of ways, or any other areas subject to erosion.
    E. Fertilize with 16-4-8 fertilizer at the rate of 6 lbs./1000 sq. ft.
16. All shrub areas and areas to be sodded will be automatically irrigated. Verify areas to be irrigated with o prior to commencing work.
17. Contractor shall clean up and remove from the premises all surplus materials and rubbish.
18. All shrubs and sod shall be guaranteed for one hundred eighty (180) days after final acceptance of the f by owner. All trees shall be guaranteed for one (1) year after final acceptance of the final phase.
19. Protective barricades shall be placed around all protected trees to be saved and shall remain in place un construction is complete. Barricades shall be a minimum of 10' from the edge of the tree. Barricade shal constructed of wood and be a minimum of 3' in height.
20. Final inspection will not take place until all materials have been planted/installed properly.
21. Contractor will be notified by letter of the final acceptance of each phase within ten (10) days after final phase inspection or ten (10) days after reinspection should that be necessary.
22. Upon final notice of final acceptance of each phase, the owner will assume maintenance.
23. If trees are wrapped in burlap and wire, remove wire and burlap from the surface of the root ball.

Quantity	Common Name	Scientific Name	Soil Moisture Range	Native	Spacing	Notes
	STREET TREES					
0	None Required					
	TREES					
49	Southern live oak, cathedral oak	*Querous virginiana*	Dry - moist	Yes	as shown	4" cal. 12'
52	Crape myrtle	*Lagerstroemia indica*	Dry - moist	No	as shown	2.5" cal. 6'
24	Southern magnolia	*Magnolia grandiflora*	Moist - dry	Yes	as shown	4" cal. 12'
10	East Palatka holly	*Ilex x attenuata 'East Palatka'*	Moist - wet	Yes	as shown	2.5" cal. 6'
4	American fringetree, old man's beard	*Chionanthus virginicus*	Dry - moist	Yes	as shown	2.5" cal. 6'
34	Dahoon holly	*Ilex cassine*	Moist - wet	Yes	as shown	2.5" cal. 6'
	SHRUBS					
813	Sweet viburnum	*Viburnum odoratissimum*	Moist - wet	No	3' oc	3G
155	Formosa azalea	*Rhododendron spp.*	Dry - moist - wet	Yes	3' oc	3G
334	Sandankwa viburnum	*Viburnum suspensum*	Moist - wet	No	3' oc	3G
178	Thryallis, rain-of-gold, shower of gold	*Galphimia glauca*	Dry - moist	No	3'oc	3G
70	Florida anise, red magnolia	*Illicium floridanum*	Moist - wet	Yes	3' oc	3G
	GROUND COVER					
	Bahia Sod					

L.R. Huffstetler III, Landscape Architect
36958 Lake Yale Drive
Grand Island, Fl 32735
(352) 446-5216
L.R. Huffstetler III - Lic. # 0000744

February 12th, 2015
GRAPHIC SCALE
(IN FEET)
1 inch = 30 ft.

Urban & Regional Planners, Inc.
1162 CAMP AVENUE - MT. DORA, FL 32757
(352)385-1590 / FAX (352)383-4824
Proj.: Village Veranda File: 15M-1 02-12-2015.dwg

1 of 3

Village Veranda
Landscape plan
Irrigation Plan
Lady Lake, Florida

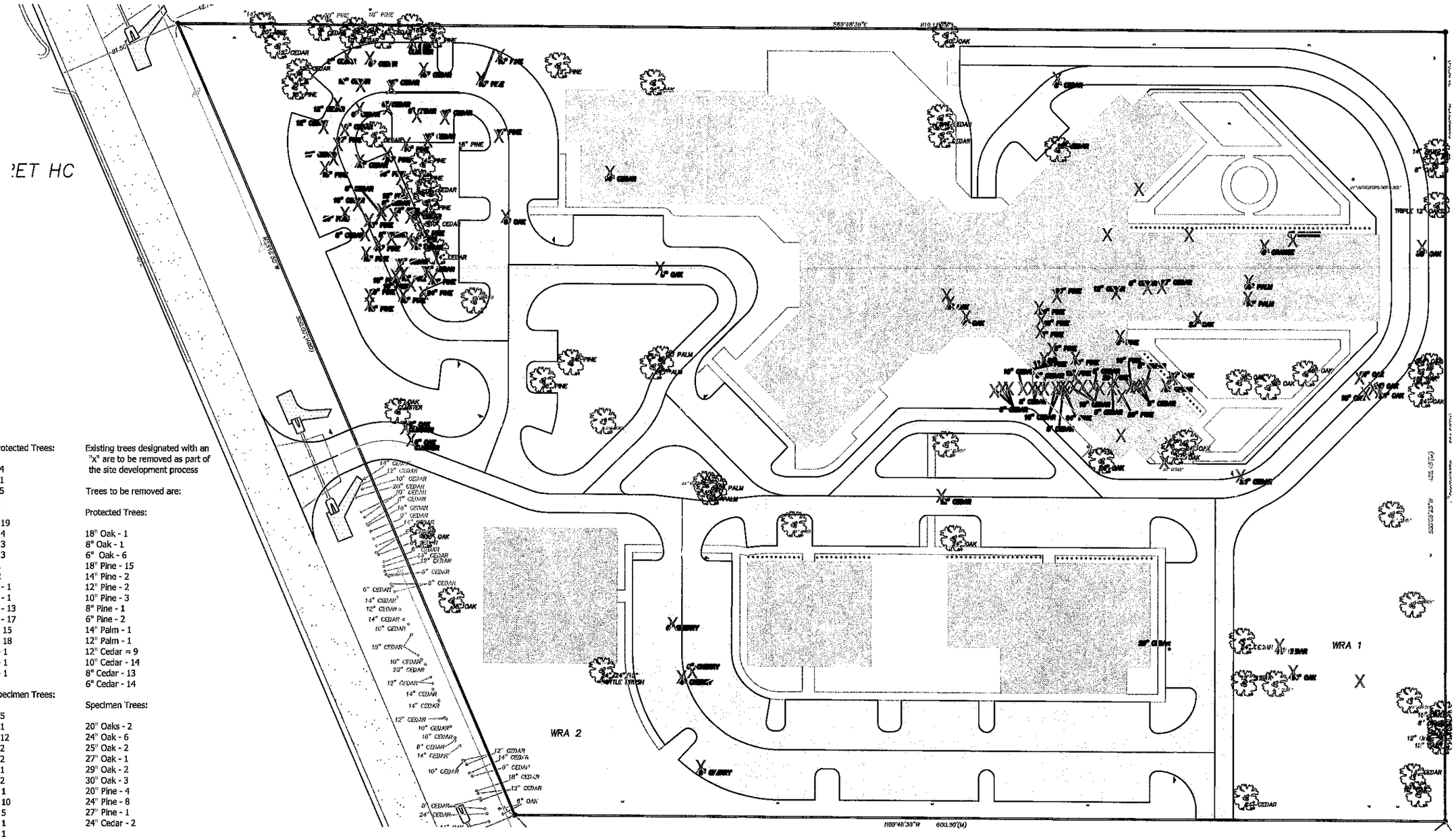

Existing Protected Trees:

18" Oak - 4
14" Oak - 1
12" Oak - 5
8" Oak - 2
6" Oak - 9
18" Pine - 19
14" Pine - 4
12" Pine - 3
10" Pine - 3
8" Pine - 1
6" Pine - 2
18" Cedar - 1
14" Cedar - 1
12" Cedar - 13
10" Cedar - 17
8" Cedar - 15
6" Cedar - 18
18" Palm - 1
14" Palm - 1
12" Palm - 1

Existing Specimen Trees:

30" Oak - 5
31" Oak - 1
24" Oak - 12
25" Oak - 2
29" Oak - 2
27" Oak - 1
20" Oak - 2
30" Pine - 1
24" Pine - 10
20" Pine - 5
23" Pine - 1
27" Pine - 1
24" Cedar - 4
24" Bottle Brush - 1
24" Palm - 1

Existing Historic Trees:

55" Oak - 1
50" Oak - 1
48" Oak - 2
41" Oak - 1
40" Oak - 2
36" Oak - 4

Existing trees designated with an "x" are to be removed as part of the site development process

Trees to be removed are:

Protected Trees:

18" Oak - 1
8" Oak - 1
6" Oak - 6
18" Pine - 15
14" Pine - 2
12" Pine - 2
10" Pine - 3
8" Pine - 1
6" Pine - 2
14" Palm - 1
12" Palm - 1
12" Cedar = 9
10" Cedar - 14
8" Cedar - 13
6" Cedar - 14

Specimen Trees:

20" Oaks - 2
24" Oak - 6
25" Oak - 2
27" Oak - 1
29" Oak - 2
30" Oak - 3
20" Pine - 4
24" Pine - 8
27" Pine - 1
24" Cedar - 2

Tree Calculation:

186 existing trees total = 2,998 inches of caliper /8.2 acres = 366 inches of caliper per acre.
114 trees to be removed = 1,472 inches of caliper (49%)
73 canopy trees and 100 understory trees to be installed on site in buffers and required plantings = 542 inches
1,526 inches existing trees to remain + 542 inches to be installed = 2,068 inches = 252 inches per acre

173 new trees + 69 remaining trees = 242 trees / 8.2 acres = 30 trees per acre.

The caliper of trees in script have been field verified.

Urban & Regional Planners, Inc.
1162 CAMP AVENUE - MT. DORA, FL 32757
(352)385-1940 / FAX (352)383-4924
Proj.: Village Veranda File: 1594-1 02-11-2015.dwg

2 of 3

Village Veranda
Tree Removal

Lady Lake, Florida

February 11th, 2015

GRAPHIC SCALE

L.R. Huffstetler III, Landscape Architect
16955 Lake Yale Drive
Grand Island, Fl 32735
(352) 516-8254
L.R. Huffstetler III - Lic. # 0000744

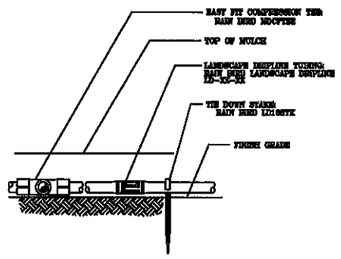

① LANDSCAPE DRIP LINE ON GRADE
N.T.S.

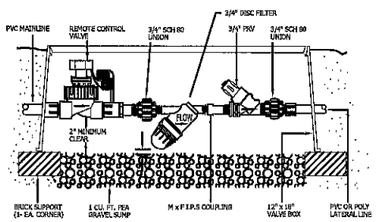

② REMOTE CONTROL VALVE W/ 3/4" PRV & 3/4" DISC FILTER
NOT TO SCALE

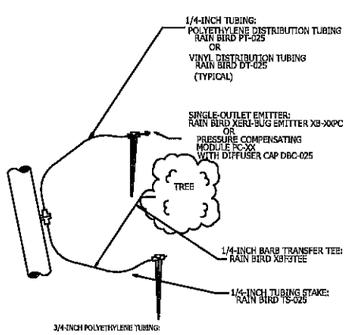

NOTE:
USE XERIMAN TOOL XM-TOOL TO INSERT CONNECTOR DIRECTLY INTO 1/2-INCH POLYETHYLENE TUBING.

③ EMITTERS AROUND TREE ON 1/4 INCH TUBING
N.T.S.

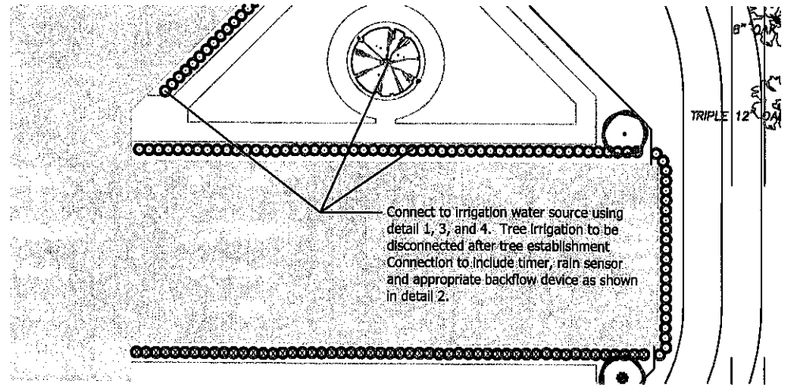

Typical Interior Bed and Tree Planting Irrigation
not to scale

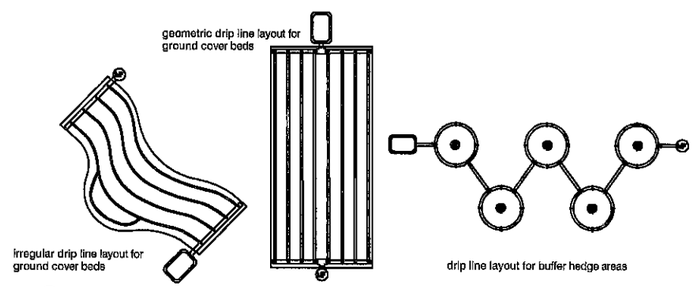

④ TYPICAL PIPE AND DRIP LINE LAYOUT PATTERNS
NOT TO SCALE

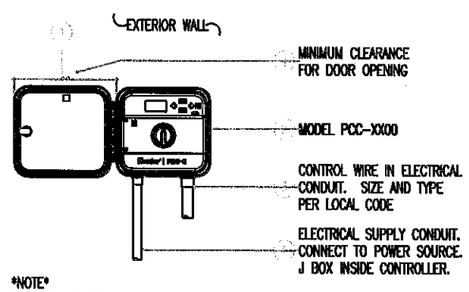

NOTE
SPECIFY 6 & 12 STATION MODEL CONTROLLER. MOUNT CONTROLLER WITH LCD SCREEN AT EYE LEVEL. CONTROLLER SHALL BE HARD-WIRED TO GROUNDED 110 VAC SOURCE.

⑤ PRO-C CONVENTIONAL CONTROLLER
not to scale IRRIGATION DETAIL

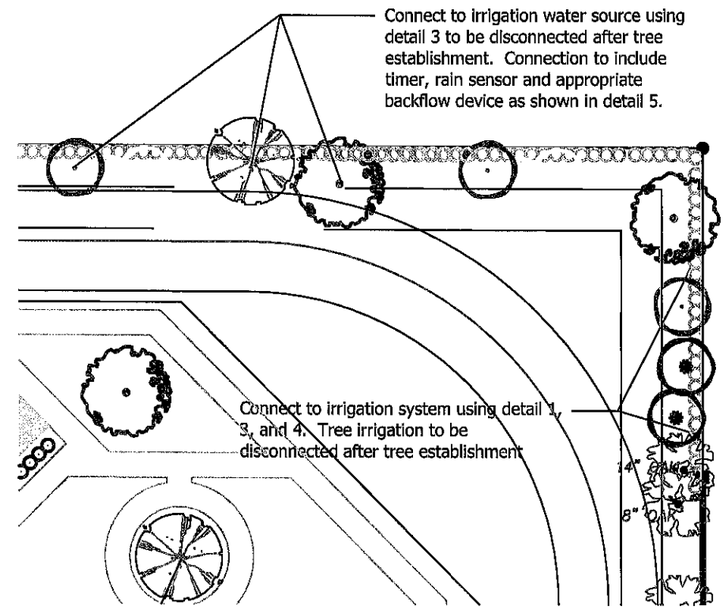

Typical Perimiter Buffer Irrigation
not to scale

Irrigation Notes:

1. Connect to new irrigation well as shown.
2. Install backflow device as required
3. Controller to be equipped with rain sensor and back-up battery
4. All trees shall be on a seperate irrigation zone from shrubs. Tree zone to be turned off after tree establishment.
5. Shrub irrigation to be Rainbird drip line with 12" emitter spacing or equal installed as shown
6. Tree zone to be 3/4" poly with three emitters per tree
7. Sod to be irrigated by hand until established
8. Contractor to determine pressure and volume of water avalible and size zones accordingly
9. Automatic Irrigation system to provide 100% coverage of shrubs and trees only
10. Sitework contractor to provide 4' SCH 40 PVC sleeves under pavement where indicated.
11. All irrigation pipe shall be purple
12. Bahia sod to be irrigated by hand until established

L.R. Huffsteter III, Landscape Architect
36955 Lake Vale Drive
Grand Island, Fl 32735
(352) 516-5254
L.R. Huffsteter III - Lic. # 0000764

February 11th, 2015
GRAPHIC SCALE
North

Urban & Regional Planners, Inc.
1162 CAMP AVENUE - MT. DORA, FL 32757
(352)385-1940 / FAX (352)383-4824
Proj.: Village Veranda File: 1584-1 02-11-2015.dwg

3 of 3

Village Veranda
Irrigation Plan
Lady Lake, Florida

Village Veranda at Lady Lake
Village Veranda at Lady Lake, L.L.C.

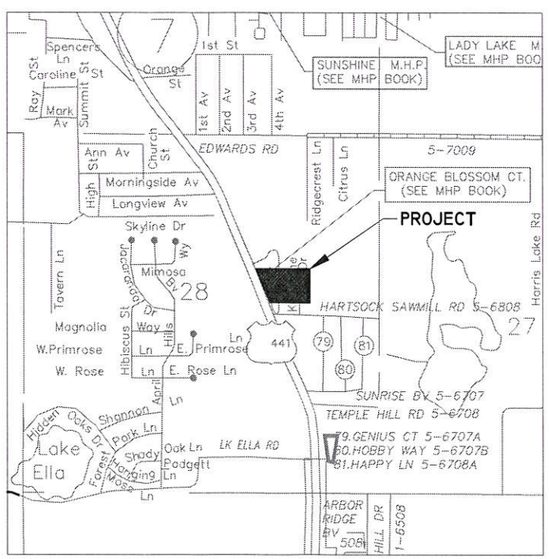

LOCATION MAP
1"=1000'

VILLAGE VERANDA at LADY LAKE LLC./
ELIZABETH MARK
55 SE 2nd AVE SUITE #301
DELRAY BEACH, FLORIDA 33444

Wicks Engineering Services, Inc.
225 West Main Street, Tavares, Florida 32778
www.wicksengineering.com (352) 343-8667
C.A. #30062

INDEX OF SHEETS

1	COVER SHEET
2	SURVEY (BY OTHERS)
3	GENERAL SITE PLAN
4–5	GENERAL NOTES
6	SITE PLAN
7	DEMO AND EROSION CONTROL
8	SIGNING, MARKING & GEOMETRY PLAN
9	GRADING & DRAINAGE PLAN
10	UTILITY PLAN
11	SECTIONS
12–16	DETAILS

KENNETH RANDAL WICKS
LICENSE
No. 33274
STATE OF
FLORIDA
PROFESSIONAL ENGINEER

KENNETH R. WICKS, P.E. FL. REG. NO. 33274
DATE: 2/23/15

2-20-15 FINAL SUBMITTAL

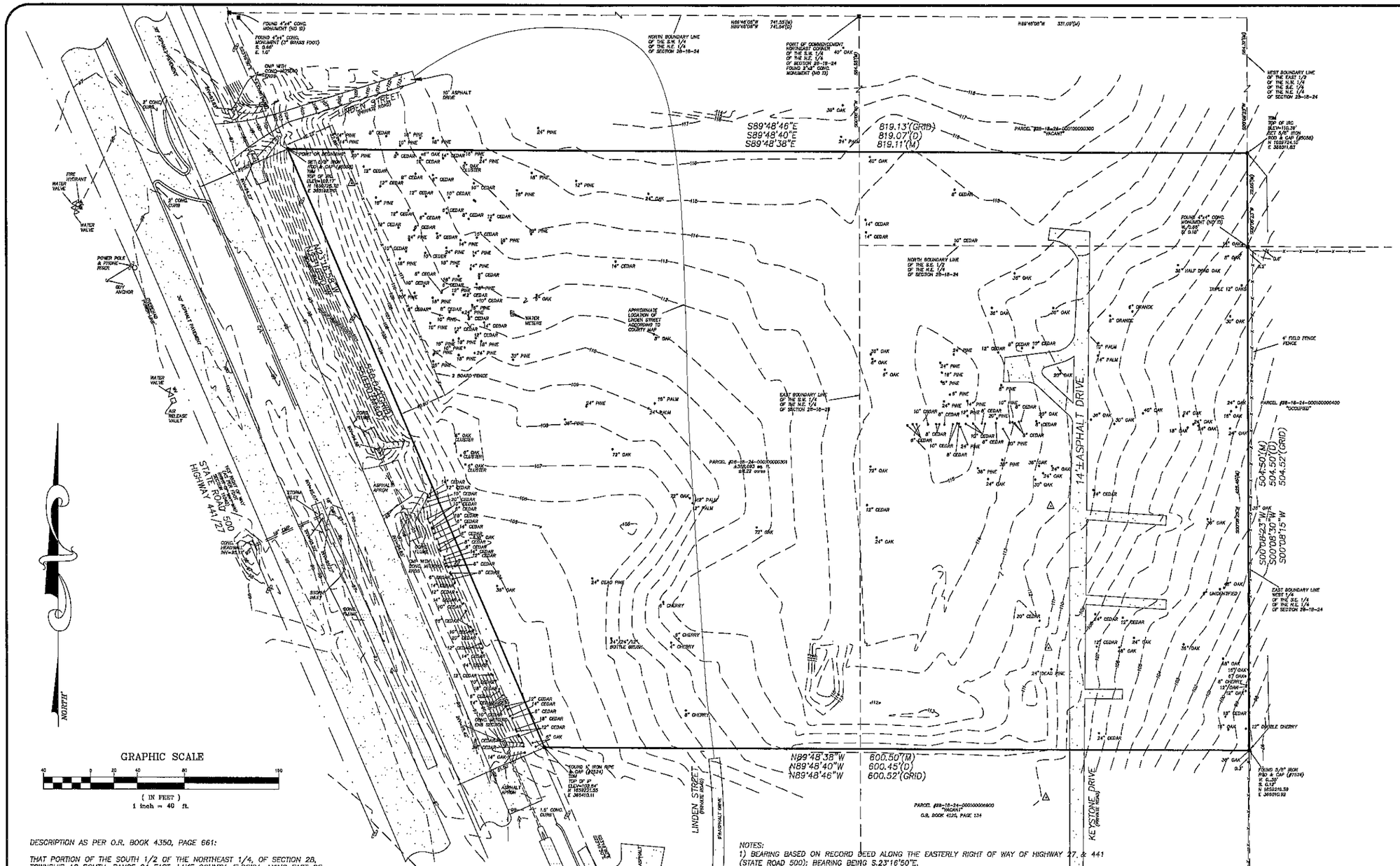

DESCRIPTION AS PER O.R. BOOK 4350, PAGE 661:

THAT PORTION OF THE SOUTH 1/2 OF THE NORTHEAST 1/4, OF SECTION 28, TOWNSHIP 18 SOUTH, RANGE 24 EAST, LAKE COUNTY, FLORIDA, LYING EAST OF THE EASTERLY RIGHT-OF-WAY OF HIGHWAY 27 & 441 (STATE ROAD 500) BEING MORE PARTICULARLY DESCRIBED AS FOLLOWS: COMMENCE AT THE NORTHEAST CORNER OF THE SOUTHWEST 1/4 OF THE NORTHEAST 1/4 OF SAID SECTION 28, THENCE RUN N.89°46'08"W. ALONG THE NORTH BOUNDARY OF THE SOUTHWEST 1/4 OF THE NORTHEAST 1/4 OF SAID SECTION 28, A DISTANCE OF 741.54 FEET TO A POINT ON SAID EASTERLY RIGHT-OF-WAY LINE OF HIGHWAY 27 & 441 (STATE ROAD 500); THENCE RUN S.23°16'50"E. ALONG SAID RIGHT-OF-WAY LINE A DISTANCE OF 637.86 FEET TO THE POINT OF BEGINNING; THENCE RUN S.89°48'40"E. 819.07 FEET TO THE EAST BOUNDARY LINE OF THE WEST 1/4 OF THE SOUTHEAST 1/4 OF THE NORTHEAST 1/4 OF SAID SECTION 28; THENCE RUN S.00°08'30"W. ALONG SAID EAST LINE OF THE WEST 1/4 OF THE SOUTHEAST 1/4 OF THE NORTHEAST 1/4, A DISTANCE OF 504.50 FEET TO THE NORTHEAST CORNER OF A TRACT OF LAND DESCRIBED IN O.R. BOOK 4120. PAGE 134, PUBLIC RECORDS OF LAKE COUNTY, FLORIDA; THENCE RUN N.89°48'40"W. ALONG THE NORTH BOUNDARY OF SAID PARCEL, 600.45 FEET TO A POINT ON SAID EASTERLY RIGHT OF WAY; THENCE RUN N.23°16'50"W., ALONG SAID EASTERLY RIGHT OF WAY, 550.00 FEET TO THE POINT OF BEGINNING, CONTAINING 358,074 SQUARE FEET OR 8.22 ACRES MORE OR LESS

LEGEND:

°	=	DEGREES WHEN USED IN A BEARING AND/OR ANGLE
'	=	MINUTES WHEN USED IN A BEARING AND/OR ANGLE
"	=	SECONDS WHEN USED IN A BEARING AND/OR ANGLE
'	=	FEET WHEN USED IN A DISTANCE
C/L	=	CENTERLINE
CONC.	=	CONCRETE
M	=	MEASURED DISTANCE OR BEARING
P	=	PLAT MEASUREMENT
	=	UTILITY POLE
	=	LIGHT POLE
N.	=	NORTH
E.	=	EAST
S.	=	SOUTH
W.	=	WEST
	=	PHONE RISER
	=	FIRE HYDRANT
	=	WATER VALVE
	=	WATER METER
	=	GUY ANCHOR

NOTES:

1) BEARING BASED ON RECORD DEED ALONG THE EASTERLY RIGHT OF WAY OF HIGHWAY 27 & 441 (STATE ROAD 500); BEARING BEING S.23°16'50"E.
2) SURVEY BASED ON EXISTING MONUMENTATION.
3) DESCRIPTION AS PER O.R. BOOK 4350, PAGE 661.
4) BOUNDARY SURVEY FOR VILLAGE VERANDA AT LADY LAKE, LLC.
5) LANDS SHOWN HEREON HAVE NOT BEEN ABSTRACTED FOR RIGHT-OF-WAY, EASEMENTS AND/OR OTHER INSTRUMENTS OF RECORD.
6) UNDERGROUND AND OVERHEAD IMPROVEMENTS, IF ANY, WERE NOT LOCATED.
7) TRACT "A" SHOWN HEREON IS NOT SUBJECT TO THE FLOOD PRONE AREA AS ESTABLISHED BY THE NATIONAL FLOOD INSURANCE PROGRAM, COMMUNITY PANEL NUMBER 12069C0170E, DECEMBER 18, 2012, AND IS CONSIDERED TO BE IN ZONE "X." BASE FLOOD ELEVATION IS 69.0'.
8) REPRODUCTIONS OF THIS SURVEY ARE NOT VALID UNLESS SIGNED & SEALED WITH AN EMBOSSED SURVEYORS SEAL.
9) THE ACCURACY OF THE SURVEY MEASUREMENTS USED FOR THIS SURVEY MEETS OR EXCEEDS 1 FOOT IN 10,000 FEET.
10) THIS SURVEY HAS BEEN PREPARED FOR THE EXCLUSIVE BENEFIT OF THE PARTY(IES) NAMED HEREON, AND SHALL NOT BE DUPLICATED OR RELIED UPON BY ANY OTHER INDIVIDUAL OR ENTITY WITHOUT AUTHORIZATION FROM MILAM LAND SURVEYING, INC.
11) ELEVATIONS BASED UPON NGS BENCHMARKS Z-426, ELEVATION=80.26' (NAVD-88) & Y-426, ELEVATION=104.22 (NAVD-88).
12) STATE PLANE COORDINATES WERE BASED ON NGS BENCH MARK "BOOTH" AND "V055". BASED ON NAD 83 (2011) POSITION AND USING A AVERAGE SCALE FACTOR OF 1.000034485.

CERTIFIED TO:
1) VILLAGE VERANDA AT LADY LAKE, LLC

I HEREBY CERTIFY THAT THIS SURVEY WAS MADE UNDER MY RESPONSIBLE DIRECTION AND SUPERVISION, AND THE PLAT AND DESCRIPITON ABOVE IS A CORRECT REPRESENTATION OF THE LAND SURVEYED AND MEETS THE ESTABLISHED MINIMUM TECHNICAL STANDARDS SET FORTH BY THE FLORIDA BOARD OF PROFESSIONAL LAND SURVEYORS IN CHAPTER 5J-17, FLORIDA ADMINISTRATIVE CODE, PURSUANT TO SECTION 472.027, FLORIDA STATUTES.

GARY L. MILAM P.S.M. #5058
MILAM LAND SURVEYING, INC. L.B. #6802
2102 N.E. 3rd STREET
OCALA, FLORIDA 34470
(352) 622-7224

GARY L. MILAM PROFESSIONAL SURVEYOR & MAPPER No. 5058 STATE OF FLORIDA

NO.	BY	DATE	REVISION

SHEET NO. 1 of 1

Milam Land Surveying
PROFESSIONAL SURVEYORS & MAPPERS
GARY L. MILAM, P.S.M. #5058
2102 N.E. 3rd STREET, OCALA, FL 34470
(352) 622-7224 OFFICE (866) 425-3128 FAX

PROJECT NAME
BOUNDARY SURVEY FOR:
VILLAGE VERANDA AT LADY LAKE, LLC

DRAWN BY:	RAB	DATE:	4/15/14
CHECKED BY:	GM	BOOK NO.:	173/64
JOB NO.:	14-097		

GENERAL PROJECT DESCRIPTION
CONSTRUCTION AND OPERATION OF AN ASSORTED LIVING FACILITY WITH MEMORY CARE, MEDICAL CLINIC, ADULT DAY CARE AND OFFICE SUPPORT SERVICES.

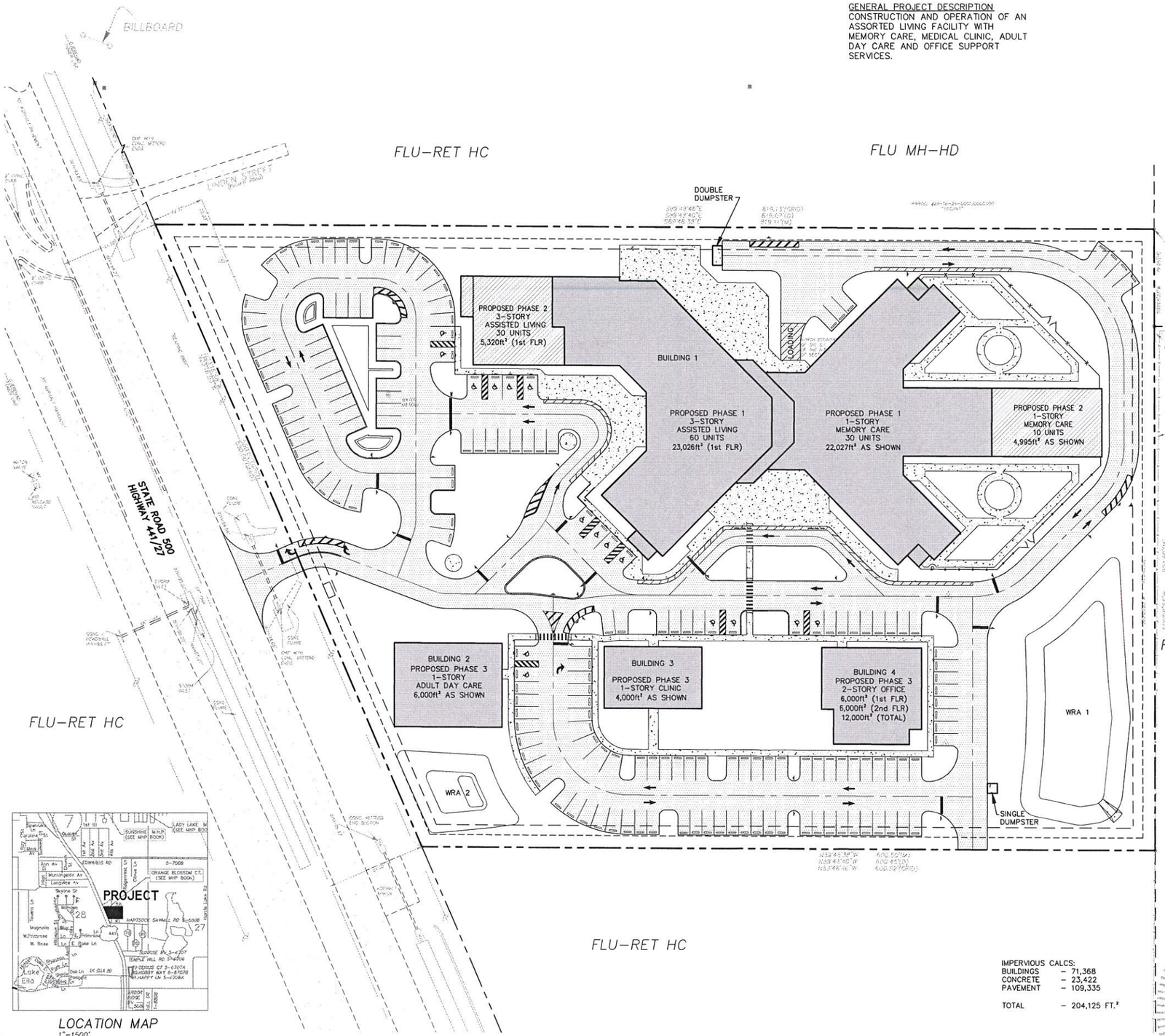

LOCATION MAP
1"=1500'

IMPERVIOUS CALCS:

BUILDINGS	– 71,368
CONCRETE	– 23,422
PAVEMENT	– 109,335
TOTAL	– 204,125 FT.²

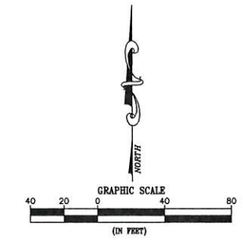

LEGEND

- PROPERTY LINE
- ℄ PROPOSED ROAD
- 10' EASEMENT LINE
- 18' BUILDING SETBACK
- WALL
- CONCRETE PAVEMENT
- NEW BUILDING
- NEW PAVEMENT

NOTES

1. TOTAL PROJECT AREA – 358,093 ft² – 8.22 ac.±
   PROPOSED PERVIOUS AREA – 153,968 ft² – 3.53 ac. (43%)
   PROPOSED IMPERVIOUS AREA – 204,125 ft² – 4.69 ac. (57%)
2. ZONING:
   EXISTING – CP
   ADJACENT – HC, MH9 & R-1 (Lake County)
3. FLU DESIGNATION – COMMERCIAL-GENERAL
   URBAN MEDIUM (Lake County)
4. PROPOSED ADULT LIVING CAMPUS – 1-3 STORY BUILDINGS
   BLDG 1 – 112,060 FT²
   BLDG 2 – 6,000 FT²
   BLDG 3 – 4,000 FT²
   BLDG 4 – 12,000 FT²
   TOTAL – 134,060 FT²
5. PARKING:
   TOWN CODE – 1 SPACE PER EMPLOYEE ON LARGEST SHIFT
   1 SPACE PER 2 BEDS
   REQUIRED:
   PHASE 1 – 90 BEDS = = 45 SPACES
   PHASE 1 – 20 EMPLOYEES = 20 SPACES
   PHASE 2 – 40 BEDS = 20 SPACES
   PHASE 3 – OFFICE/MEDICAL/ADULT DAY CARE (1 SPACE PER 200 FT²)
   31,854 FT² = 159 SPACES
   REQUEST JOINT USE PARKING

   PROVIDED:
   HANDICAPPED 12'x20' – 16
   REGULAR 10'x20' – 159
   TOTAL – 175
6. WATER AND SEWER TO BE SUPPLIED BY TOWN OF LADY LAKE (WATER & SEWER)
7. STORMWATER MANAGEMENT – DRY RETENTION
8. PROJECT SOILS: APOPKA SAND, KENDRICK SAND & CANDLER SAND
9. SETBACKS:
   FRONT – 18'
   SIDES – 20'
   REAR – 20'
10. BOUNDARY AND TOPOGRAPHIC SURVEY PROVIDED BY:
    Gary L. Milam
    Dated April 15, 2014
11. THERE ARE NO WETLANDS OR FLOOD PRONE AREAS ON SITE.

LEGAL DESCRIPTION

DESCRIPTION AS PER O.R. BOOK 4350, PAGE 661:

THAT PORTION OF THE SOUTH 1/2 OF THE NORTHEAST 1/4, OF SECTION 28, TOWNSHIP 18 SOUTH, RANGE 24 EAST, LAKE COUNTY, FLORIDA, LYING EAST OF THE EASTERLY RIGHT-OF-WAY OF HIGHWAY 27 & 441 (STATE ROAD 500) BEING MORE PARTICULARLY DESCRIBED AS FOLLOWS:
COMMENCE AT THE NORTHEAST CORNER OF THE SOUTHWEST 1/4 OF THE NORTHEAST 1/4 OF SAID SECTION 28; THENCE RUN N.89°46'08"W. ALONG THE NORTH BOUNDARY OF THE SOUTHWEST 1/4 OF THE NORTHEAST 1/4 OF SAID SECTION 28, A DISTANCE OF 741.54 FEET TO A POINT ON SAID EASTERLY RIGHT-OF-WAY LINE OF HIGHWAY 27 & 441 (STATE ROAD 500); THENCE RUN S.23°16'50"E. ALONG SAID RIGHT-OF-WAY LINE A DISTANCE OF 637.86 FEET TO THE POINT OF BEGINNING; THENCE RUN S.89°48'40"E. 819.07 FEET TO THE EAST BOUNDARY LINE OF THE WEST 1/4 OF THE SOUTHEAST 1/4 OF THE NORTHEAST 1/4 OF SAID SECTION 28; THENCE RUN S.00°08'30"W. ALONG SAID EAST LINE OF THE WEST 1/4 OF THE SOUTHEAST 1/4 OF THE NORTHEAST 1/4, A DISTANCE OF 504.50 FEET TO THE NORTHEAST CORNER OF A TRACT OF LAND DESCRIBED IN O.R. BOOK 4120, PAGE 134, PUBLIC RECORDS OF LAKE COUNTY, FLORIDA; THENCE RUN N.89°48'40"W., ALONG THE NORTH BOUNDARY OF SAID PARCEL, 600.45 FEET TO A POINT ON SAID EASTERLY RIGHT OF WAY; THENCE RUN N.23°16'50"W., ALONG SAID EASTERLY RIGHT OF WAY, 550.00 FEET TO THE POINT OF BEGINNING, CONTAINING 358,074 SQUARE FEET OR 8.22 ACRES MORE OR LESS

KENNETH R. WICKS, P.E. FL. REG. NO. 33274
DATE: 2/23/15

KENNETH R. WICKS No. 33274 STATE OF FLORIDA PROFESSIONAL ENGINEER

Wicks Engineering Services, Inc.
225 West Main Street, Tavares, Florida 32778
www.wicksengineering.com (352) 343-8667
C.A. #30062

Village Veranda at Lady Lake, LLC.
Elizabeth Mark
55 Se 2nd Avenue, Suite 301
Delray Beach, Florida 33444

Village Veranda at Lady Lake
General Site Plan
Lady Lake, Florida 32159

REVISION:	DATE:
1-9-15 TOWN COMMENTS	
2-20-15 FINAL SUBMITTAL	

Drawn: NSR
Checked: KRW
Date: 07-08-14
Scale: AS SHOWN
File No: 14118
Sheet: 3 of 16

GENERAL NOTES

1. ANY DIFFERING SITE CONDITIONS FROM THAT WHICH IS REPRESENTED HEREON, WHETHER ABOVE, ON OR BELOW THE SURFACE OF THE GROUND, SHALL BE BROUGHT TO THE IMMEDIATE ATTENTION OF THE ENGINEER IN WRITING, WITHIN 48 HOURS OF DISCOVERY. NO CLAIM FOR EXPENSES INCURRED BY THE CONTRACTOR DUE TO SUCH DIFFERING CONDITIONS WILL BE ALLOWED IF HE OR SHE FAILS TO PROVIDE WRITTEN NOTIFICATION.

2. THE BOUNDARY AND TOPOGRAPHIC SURVEYS FOR THIS PROJECT WERE PERFORMED BY OTHERS AND WICKS ENGINEERING SERVICES, INC. ASSUMES NO RESPONSIBILITY, IN WHOLE OR IN PART, FOR THE COMPLETENESS AND ACCURACY OF THE SURVEYS. WICKS ENGINEERING SERVICES, INC. HAS RELIED UPON THE SURVEYS IN PREPARING THE CIVIL ENGINEERING DESIGN SHOWN IN THESE DRAWINGS. THE CONTRACTOR SHALL VERIFY THE EXISTING TOPOGRAPHIC DATA, THE LOCATION OF EXISTING SITE FEATURES, UTILITIES AND ALL OTHER SITE CONDITIONS SHOWN ON THE DRAWINGS PRIOR TO COMMENCING WORK. DIFFERING SITE CONDITIONS SHALL BE DISCLOSED AS DESCRIBED IN GENERAL NOTE NUMBER 1.

3. THE CONTRACTOR SHALL BE RESPONSIBLE FOR ENSURING THAT ALL REQUIRED CONSTRUCTION PERMITS HAVE BEEN OBTAINED PRIOR TO COMMENCING WORK.

4. ALL MATERIALS, INSTALLATION, AND TESTING SHALL BE IN ACCORDANCE WITH LOCAL JURISDICTIONS AND FLORIDA DEPARTMENT OF TRANSPORTATION STANDARD SPECIFICATIONS FOR ROAD AND BRIDGE CONSTRUCTION. WHERE THE SPECIFICATIONS CONFLICT, THE MORE STRINGENT SPECIFICATION SHALL APPLY.

5. THE SUBSURFACE INFORMATION FOR THIS PROJECT WAS OBTAINED FOR DESIGN PURPOSES AND MAY NOT BE AN ADEQUATE REPRESENTATION OF ACTUAL CONDITIONS FOR PROJECT CONSTRUCTION. INFORMATION SHOWN, INCLUDING GROUND WATER LEVELS, REPRESENTS EXISTING CONDITIONS AT THE SPECIFIC BORING LOCATIONS AT THE TIME THE BORINGS WERE MADE. DIFFERING SITE CONDITIONS SHALL BE DISCLOSED AS DESCRIBED IN GENERAL NOTE NUMBER 1.

6. THE SITE IS CLASSIFIED AS ZONE "X", PER FEMA FLOOD MAP PANEL 12069C0170E DATED DECEMBER 18, 2012

7. THE CONTRACTOR SHALL FURNISH, ERECT AND MAINTAIN ALL NECESSARY TRAFFIC CONTROL AND SAFETY DEVICES IN ACCORDANCE WITH THE "MANUAL ON UNIFORM TRAFFIC CONTROL DEVICES" AND THE LATEST FLORIDA DEPARTMENT OF TRANSPORTATION "ROADWAY DESIGN STANDARDS"

8. ALL HANDICAP ACCESSIBLE CURB RAMPS SHALL BE CONSTRUCTED (INCLUDING THE WALKING SURFACE) IN COMPLIANCE WITH THE FLORIDA ACCESSIBILITY CODE FOR BUILDING CONSTRUCTION, SECTION 11 AND THE FLORIDA DEPARTMENT OF TRANSPORTATION (FDOT) INDEX 304.

9. THE CONTRACTOR SHALL COORDINATE CIVIL DRAWINGS WITH ALL TRADES, INCLUDING BUT NOT LIMITED TO MECHANICAL, ELECTRICAL, IRRIGATION, FIRE SYSTEMS. IF ANY DISCREPANCIES ARE FOUND, THE CONTRACTOR SHALL NOTIFY THE ENGINEER IN WRITING IMMEDIATELY.

10. SIGNAGE AND STRIPING SHALL CONFORM TO THE FDOT ROADWAY AND TRAFFIC DESIGN STANDARDS, AND THE "MANUAL ON UNIFORM TRAFFIC CONTROL DEVICES" (MUTCD). SIGNS SHALL BE ERECTED ACCORDING TO THE REFERENCE NUMBERS DESIGNATED BY THE FDOT OR THE MUTCD.

11. ALL WORK SHALL BE OPEN TO AND SUBJECT TO INSPECTION BY AUTHORIZED PERSONNEL OF THE OWNER, INVOLVED UTILITY COMPANIES, PROJECT ENGINEER AND REGULATORY AGENCIES. ENGINEER SHALL BE NOTIFIED 48 HOURS PRIOR TO REQUIRED INSPECTIONS.

12. ALL RECOMMENDATIONS AND REQUIREMENTS OF INSPECTION PERSONNEL SHALL BE REPORTED TO ENGINEER/OWNER PRIOR TO IMPLEMENTATION. COMPENSATION WILL NOT BE ALLOWED FOR WORK WHICH IS NOT AUTHORIZED BY ENGINEER/OWNER.

13. CONTRACTOR TO SUBMIT SHOP DRAWINGS FOR ENGINEERING AND AGENCY APPROVAL PRIOR TO PROCUREMENT OF MATERIALS.

14. CONTRACTOR TO SUBMIT COPIES OF ALL TESTING REPORTS TO THE OWNER AND ENGINEER FOR ACCEPTANCE AND CERTIFICATIONS.

15. ANY PUBLIC LAND CORNER, WITHIN THE LIMITS OF CONSTRUCTION, IS TO BE PROTECTED. IF A CORNER MONUMENT IS IN DANGER OF BEING DESTROYED AND HAS NOT YET BEEN PROPERLY REFERENCED, THE CONTRACTOR SHALL NOTIFY THE OWNER, ENGINEER & SURVEYOR WITHOUT DELAY. DISTURBED MONUMENTATION SHALL BE RESTORED BY A FLORIDA LICENSED LAND SURVEYOR AT CONTRACTOR'S EXPENSE.

16. ALL AREAS WHERE PAVEMENT, BUILDING SLABS, FOUNDATIONS, UTILITIES, CONDUITS, AND/OR UTILITY STRUCTURES HAVE BEEN REMOVED SHALL BE BACKFILLED WITH SELECT BACKFILL MATERIAL. ALL SELECT BACKFILL MATERIAL SHALL BE PLACED AND COMPACTED PER THE REQUIREMENTS OF THE LOCAL JURISDICTION.

17. REFER TO F.D.O.T. ROADWAY AND TRAFFIC DESIGN STANDARDS INDEX FOR CONSTRUCTION OF SITE ITEMS.

18. CONTRACTOR SHALL MEET ALL LOCAL STANDARDS. CONTRACTOR SHALL BE RESPONSIBLE FOR ALL MAINTENANCE OF TRAFFIC (MOT) PLANS & SIGNAGE THAT WILL BE REQUIRED FOR THIS PROJECT AND SHALL BE INCLUDED IN THE BID FOR THIS PROJECT.

19. ACCESS ROADS AND A SUITABLE TEMPORARY OR PERMANENT SUPPLY OF WATER ACCEPTABLE TO THE FIRE DEPARTMENT SHALL BE PROVIDED AND MAINTAINED BY THE CONTRACTOR THROUGHOUT THE CONSTRUCTION PERIOD.

20. UNLESS OTHERWISE NOTED ON THE PLANS, THE CONTRACTOR SHALL PROVIDE FOR THE LAYOUT OF ALL OF THE WORK TO BE CONSTRUCTED. BENCHMARK INFORMATION SHALL BE PROVIDED TO THE CONTRACTOR BY THE OWNER OR OWNER'S SURVEYOR. ANY DISCREPANCIES BETWEEN FIELD MEASUREMENTS AND CONSTRUCTION PLAN INFORMATION SHALL BE BROUGHT TO THE ATTENTION OF THE ENGINEER IMMEDIATELY.

21. ALL TESTING RESULTS SHALL BE PROVIDED TO THE OWNER/OPERATOR AND THE ENGINEER. TESTING REQUIREMENTS ARE TO BE IN ACCORDANCE WITH THE OWNER/OPERATOR'S SPECIFICATIONS AND REQUIREMENTS. ALL TEST RESULTS SHALL BE PROVIDED (PASSING AND FAILING) ON A REGULAR AND IMMEDIATE BASIS. CONTRACTOR SHALL PROVIDE TESTING SERVICES THROUGH A FLORIDA LICENSED GEOTECHNICAL ENGINEERING FIRM ACCEPTABLE TO THE OWNER AND ENGINEER. CONTRACTOR TO SUBMIT TESTING FIRM TO OWNER FOR APPROVAL PRIOR TO COMMENCING TESTING. TESTING OF SUB GRADE, BASE, AND ASPHALT FOR THICKNESS AND DENSITY SHALL BE PERFORMED AT NO MORE THAN 200' INTERVALS.

22. SHOP DRAWINGS AND CERTIFICATIONS FOR ALL STORM DRAINAGE, WATER SYSTEM, SEWER SYSTEM, AND PAVING SYSTEM MATERIALS AND STRUCTURES ARE REQUIRED. THE CONTRACTOR SHALL SUBMIT SHOP DRAWINGS TO THE ENGINEER FOR APPROVAL PRIOR TO ORDERING THE MATERIALS REQUIRED FOR CONSTRUCTION.

23. DURING CONSTRUCTION OPERATIONS, THE CONTRACTOR SHALL TAKE SPECIAL CARE AND PROVIDE ADEQUATE PROTECTION IN ORDER TO MINIMIZE DAMAGE TO VEGETATION, SURFACED AREAS, AND STRUCTURES WITHIN RIGHT-OF-WAY, EASEMENTS AND ON CONSTRUCTION SITE, AND TAKE FULL RESPONSIBILITY FOR THE REPLACEMENT OR REPAIR THEREOF. THE CONTRACTOR SHALL BE RESPONSIBLE FOR AND SHALL MAKE GOOD ALL DAMAGE TO PAVEMENT, BUILDINGS, TELEPHONE OR OTHER CABLES, SANITARY PIPES, OR OTHER STRUCTURES BEYOND THE LIMITS OF THIS PROJECT WHICH MAY BE ENCOUNTERED, WHETHER OR NOT SHOWN ON THE DRAWINGS.

24. TEMPORARY FACILITIES: THE CONTRACTOR SHALL FURNISH WATER AND ELECTRIC POWER AS REQUIRED FOR THE CONSTRUCTION OF THE PROJECT. THE CONTRACTOR SHALL BE RESPONSIBLE FOR MAKING ALL TEMPORARY CONNECTIONS AND FOR REMOVING SAME AFTER CONSTRUCTION HAS BEEN COMPLETED. THE CONTRACTOR SHALL PROVIDE TEMPORARY TOILET FACILITIES AND ENCLOSURES FOR THE USE OF ALL WORKMAN, AT A LOCATION ON THE PROJECT WHICH SHALL BE APPROVED BY THE JURISDICTION. SUCH FACILITIES SHALL COMPLY WITH ALL LOCAL CODES AND SHALL BE MAINTAINED IN SANITARY CONDITION AT ALL TIMES. NO WORK SHALL BE STARTED UNTIL THESE FACILITIES ARE ON THE JOB SITE.

GENERAL NOTES (CONT)

25. MAINTENANCE OF TRAFFIC: THE CONTRACTOR SHALL BE RESPONSIBLE, DURING THE COURSE OF CONSTRUCTION, FOR PROPER MAINTENANCE, CONTROL, AND DETOUR OF TRAFFIC IN THE AREA OF CONSTRUCTION. ALL TRAFFIC CONTROL AND MAINTENANCE PROCEDURES SHALL BE IN ACCORDANCE WITH THE REQUIREMENTS OF THE FLORIDA DEPARTMENT OF TRANSPORTATION INDEX #600 AND LAKE COUNTY, FLORIDA, WITHIN THEIR RESPECTIVE AREAS OF JURISDICTION. IT SHALL BE THE CONTRACTOR'S RESPONSIBILITY, AS BIDDER, PRIOR TO SUBMITTING HIS BID, TO DETERMINE THE REQUIREMENTS OF THESE AGENCIES SO THAT HIS PROPOSAL REFLECTS ALL COSTS TO BE INCURRED. NO CLAIMS FOR ADDITIONAL PAYMENT SHALL BE CONSIDERED FOR COSTS INCURRED DUE TO THE PROPER MAINTENANCE, CONTROL, DETOUR, AND PROTECTION OF TRAFFIC.

26. FILL MATERIALS PLACED UNDER ROADWAYS SHALL BE COMPACTED TO AT LEAST 98% OF THE MAXIMUM DENSITY AS SPECIFIED IN AASHTO T-180. ALL OTHER FILL AREAS ARE TO BE COMPACTED TO AT LEAST 95% OF THE MAXIMUM DENSITY AS SPECIFIED IN AASHTO T-180. FILL MATERIALS SHALL BE PLACED AND COMPACTED IN A MAXIMUM OF 12" LIFTS. THE CONTRACTOR SHALL PROVIDE THE ENGINEER AND OWNER WITH ALL (PASSING AND FAILING) TESTING RESULTS. RESULTS SHALL BE PROVIDED ON A TIMELY AND REGULAR BASIS PRIOR TO CONTRACTOR'S PAY REQUEST SUBMITTAL FOR THE AFFECTED WORK.

27. ALL AREAS WITHIN RIGHT-OF-WAY SHALL BE FINISH GRADED WITH A SMOOTH TRANSITION INTO EXISTING GROUND. ALL SWALES SHALL BE STABILIZED IMMEDIATELY AFTER FINAL GRADING. ALL DISTURBED AREAS SHALL BE RAKED CLEAN OF ALL LIMEROCK AND ROCKS AND SODDED AFTER FINAL GRADING IN ACCORDANCE WITH THE CONSTRUCTION PLANS PRIOR TO FINAL INSPECTION. ALL GRASSING SHALL BE MAINTAINED BY THE CONTRACTOR UNTIL FINAL ACCEPTANCE BY THE OWNER.

DEMOLITION AND EARTHWORK NOTES

1. CONTRACTOR TO COORDINATE WITH UTILITY COMPANIES PRIOR TO ANY CONSTRUCTION ACTIVITY FOR DIG PERMITS, ELECTRICAL PERMITS OR OTHER PERMITS AS APPLICABLE. CONTRACTOR IS TO COORDINATE FULLY WITH UTILITY COMPANIES ON EXACT LOCATION OF UNDERGROUND UTILITIES PRIOR TO EXCAVATION.

2. ALL DEBRIS AND WASTE MATERIALS GENERATED BY DEMOLITION OR SUBSEQUENT CONSTRUCTION ACTIVITIES SHALL BE DISPOSED OFF-SITE IN A LEGAL MANNER AT AN APPROVED DISPOSAL FACILITY. THE CONTRACTOR SHALL OBTAIN ANY AND ALL PERMITS REQUIRED FOR DEMOLITION, CONSTRUCTION WORK AND HAULING WASTE MATERIAL. ALL ASSOCIATED COSTS AND PERMIT FEES SHALL BE THE RESPONSIBILITY OF THE CONTRACTOR.

3. CONTRACTOR SHALL BE RESPONSIBLE FOR PAVEMENT REPAIRS AND/OR RESURFACING TO ALL EXISTING ROADS WHICH ARE SAW-CUT OR DAMAGED DURING CONSTRUCTION.

4. ANY ENCOUNTERED CONTAMINATED MATERIALS SHALL BE DISPOSED OF IN A MANNER APPROVED BY THE ENGINEER IN ACCORDANCE WITH FEDERAL STATE, AND LOCAL REGULATIONS. (REFER TO TREE PROTECTION REQ.)

5. THE LOCATION OF ALL EXISTING UTILITIES SHOWN ON THE PLANS HAVE BEEN DETERMINED FROM THE BEST INFORMATION AVAILABLE, AND ARE GIVEN FOR THE CONVENIENCE OF THE CONTRACTOR. PRIOR TO THE START OF ANY CONSTRUCTION ACTIVITY, IT SHALL BE THE CONTRACTOR'S RESPONSIBILITY TO NOTIFY THE VARIOUS UTILITIES AND TO MAKE THE NECESSARY ARRANGEMENTS FOR FIELD VERIFICATION OF THE EXISTING UTILITIES. THE CONTRACTOR SHALL EXERCISE CAUTION WHEN CROSSING ANY UNDERGROUND UTILITY TO ENSURE THE INTEGRITY OF THE SYSTEM.

6. PRIOR TO DEMOLISHING UTILITY LINES, CONTRACTOR SHALL VERIFY FLOW DIRECTIONS FROM EXISTING BUILDINGS WHICH ARE TO REMAIN. IF DEMOLITION WILL CUT OFF THESE FACILITIES, THE ENGINEER, ARCHITECT, OWNER (AND/OR OWNERS REPRESENTATIVE) SHALL BE CONTACTED IMMEDIATELY.

EARTHWORK

7. THE CONTRACTOR SHALL PERFORM HIS OWN INVESTIGATIONS AND CALCULATIONS AS NECESSARY TO ASSURE HIMSELF OF EARTHWORK QUANTITIES. THERE IS NO IMPLICATION THAT EARTHWORK BALANCES, AND THE CONTRACTOR SHALL BE RESPONSIBLE FOR ANY IMPORT FILL NEEDED, OR FOR REMOVAL AND DISPOSAL OF EXCESS MATERIALS.

8. AT NO TIME SHALL THE CONTRACTOR DISTURB SURROUNDING PROPERTIES OR TRAVEL ON SURROUNDING PROPERTIES WITHOUT WRITTEN CONSENT FROM THE PROPERTY OWNER. REPAIR OR RECONSTRUCTION OF DAMAGED AREAS ON SURROUNDING PROPERTIES SHALL BE PERFORMED BY THE CONTRACTOR ON AN IMMEDIATE BASIS. ALL COSTS FOR REPAIRS SHALL BE THE RESPONSIBILITY OF THE CONTRACTOR AND NO EXTRA COMPENSATION SHALL BE PROVIDED.

9. THE CONTRACTOR SHALL BE RESPONSIBLE FOR CLEARING AND GRUBBING FOR SITE CONSTRUCTION INCLUDING CLEARING FOR PAVING, UTILITIES, DRAINAGE FACILITIES AND BUILDING CONSTRUCTION. ALL AREAS TO BE CLEARED SHALL BE FIELD STAKED AND REVIEWED BY THE OWNER AND ENGINEER PRIOR TO ANY CONSTRUCTION.

10. WHEN CLEARING LAND FOR THE PROJECT, A BURN PERMIT MUST BE OBTAINED FROM THE JURISDICTION AND THE DEPARTMENT OF FORESTRY PRIOR TO BURNING ANY MATERIAL.

11. THE FIRE DEPARTMENT WILL ISSUE A BURNING PERMIT TO ALLOW BURNING OF CLEARED MATERIAL ONLY IF THE FOLLOWING CONDITIONS ARE MET:
A. AN AIR CURTAIN INCINERATOR PROCESS IS USED DURING THE BURNING PROCESS.
B. THE BURN PIT IS AT LEAST 300 FEET AWAY FROM ANY STRUCTURE.
C. THE BURN PIT IS AT LEAST 100 FEET AWAY FROM THE ROAD.

12. ALL MATERIALS EXCAVATED SHALL REMAIN THE PROPERTY OF THE OWNER AND SHALL BE STOCKPILED AT ON-SITE LOCATIONS AS SPECIFIED BY THE OWNER. MATERIALS SHALL BE STOCKPILED SEPARATELY AS TO USABLE (NON ORGANIC) FILL STOCKPILES AND ORGANIC (MUCK) STOCKPILES IF MUCK IS ENCOUNTERED. CONTRACTOR SHALL BE RESPONSIBLE FOR THE REMOVAL OF ALL UNSUITABLE FILL MATERIALS FROM THE SITE. ALL CLAY ENCOUNTERED SHALL BE EXCAVATED OUT AND REPLACED WITH CLEAN GRANULAR FILL MATERIALS.

13. ALL FILL MATERIALS SHALL CONTAIN NO MUCK, STUMPS, ROOTS, BRUSH, VEGETATIVE MATTER, RUBBISH OR OTHER MATERIAL THAT WILL NOT COMPACT INTO A SUITABLE AND ENDURING BACKFILL. FILL SHALL BE CLEAN, NON-ORGANIC, GRANULAR MATERIAL WITH NOT MORE THAN 10% PASSING THE NO. 200 SIEVE.

EROSION & SEDIMENT CONTROL NOTES

1. THE CONTRACTOR SHALL BE RESPONSIBLE FOR: (NPDES) PERMITTING:
   A. PREPARING AND SUBMITTING FDEP NOTICE OF INTENT (NOI) AND NOTICE OF TERMINATION (NOT) APPLICATIONS AND FORMS.
   B. FDEP NOTICE OF INTENT APPLICATION FEES.
   C. PREPARING THE FDEP STORMWATER POLLUTION PREVENTION PLAN (SWPPP)

2. PRIOR TO EARTH WORK OR CONSTRUCTION, THE CONTRACTOR SHALL POST A COPY OF THE COMPLETED FLORIDA DEPARTMENT OF ENVIRONMENTAL PROTECTION NPDES NOTICE OF INTENT (NOI) FOR STORMWATER DISCHARGE FROM CONSTRUCTION ACTIVITIES AT THE SITE.

3. THE CONTRACTOR SHALL OBTAIN COPIES OF THE APPROPRIATE WATER MANAGEMENT DISTRICT PERMITS PRIOR TO COMMENCING WORK FOR THIS PROJECT AND HAVE POSTED AT CONSTRUCTION SITE.

4. SILT SCREENS AND TURBIDITY BARRIERS MUST REMAIN IN PLACE AND BE MAINTAINED IN GOOD CONDITION AT ALL LOCATIONS SHOWN UNTIL CONSTRUCTION IS COMPLETE, SOILS ARE STABILIZED AND VEGETATION HAS BEEN ESTABLISHED.

5. THE EROSION CONTROL MEASURES SHOWN HEREON ARE INTENDED AS MINIMUM STANDARDS. ANY EROSION CONTROL REQUIRED BEYOND THAT SPECIFIED TO MAINTAIN SITE EROSION SHALL BE CONSIDERED AS INCLUDED WITHIN THIS CONTRACT.

EROSION & SEDIMENT CONTROL NOTES (CONT)

6. ALL EROSION AND SEDIMENT CONTROL WORK SHALL CONFORM TO THE LOCAL WATER MANAGEMENT DISTRICT, AND FLORIDA DEPT. OF ENVIRONMENTAL PROTECTION STANDARDS, FDOT INDEX #102 AND BEST MANAGEMENT PRACTICES.

7. EROSION AND SEDIMENT CONTROL MEASURES ARE TO BE PLACED PRIOR TO, OR AS THE FIRST STEP IN CONSTRUCTION.

8. ALL PERMANENT SOIL EROSION CONTROL MEASURES FOR ALL SLOPES, CHANNELS, AND ANY DISTURBED LAND AREAS SHALL BE COMPLETED WITHIN 15 CALENDAR DAYS AFTER FINAL GRADING. ALL TEMPORARY PROTECTION SHALL BE MAINTAINED UNTIL PERMANENT MEASURES ARE IN PLACE AND ESTABLISHED.

9. PRIOR TO INITIATING CONSTRUCTION OF PLANNED IMPROVEMENTS, ALL WRA'S WILL BE EXCAVATED AND ROUGH GRADED TO PROVIDE SEDIMENT AND RUNOFF CONTROL DURING CONSTRUCTION.

10. ALL DISTURBED AREAS WILL BE BROUGHT TO FINAL GRADE AND SEEDED AND MULCHED AS SOON AS POSSIBLE.

11. AREAS WHICH MAY ERODE DUE TO SLOPES OR CONCENTRATED RUNOFF DURING CONSTRUCTION WILL BE TREATED. TEMPORARY SLOPE DRAIN PROTECTION WILL BE PROVIDED PER FDOT ROAD DESIGN STANDARD INDEX NO. 100.

12. OFF SITE DISCHARGE OF UNTREATED STORMWATER WILL BE PREVENTED USING TEMPORARY BERMS AND DIKES WHERE NEEDED.

13. INSPECTIONS SHALL BE MADE IN ACCORDANCE WITH THE NPDES PERMIT BY THE CONTRACTOR TO DETERMINE THE EFFECTIVENESS OF EROSION/SEDIMENT CONTROL EFFORTS. ANY NECESSARY REMEDIES AND MAINTENANCE SHALL BE PERFORMED WITHOUT DELAY.

14. ALL MUD, DIRT OR OTHER MATERIALS TRACKED OR SPILLED ONTO EXISTING PUBLIC ROADS AND FACILITIES, DUE TO CONSTRUCTION SHALL BE PROMPTLY REMOVED BY THE CONTRACTOR.

15. EROSION AND SEDIMENT MATERIALS FROM THIS PROJECT SHALL BE CONTAINED ON-SITE AND NOT ALLOWED TO COLLECT ON ANY OFF-SITE AREAS OR IN WATERWAYS. THESE INCLUDE BOTH NATURAL AND MAN-MADE OPEN DITCHES, STREAMS, STORM DRAINS, LAKES AND PONDS.

16. THE CONTRACTOR SHALL BE RESPONSIBLE FOR OBTAINING ALL DEWATERING PERMITS.

STORMWATER AND GRADING NOTES

1. ALL OPEN DRAINAGE SWALES SHALL BE GRASSED OR LINED WITH APPROVED REINFORCED EARTH MATTING. APPROVED RIP RAP MUST BE PLACED AS NECESSARY TO CONTROL EROSION.

2. BENCHMARK LOCATIONS AND ELEVATIONS ARE AS REPRESENTED BY THE SURVEYOR AT THE TIME OF THE SURVEY. CONTRACTOR SHALL VERIFY ITS CORRECTNESS AT TIME OF CONSTRUCTION.

3. SPOT ELEVATIONS SHOWN FOR INLETS AND MANHOLES ARE AT TOP OF RIM.

4. ALL GRADING AND SITE PREPARATION SHALL CONFORM TO THE LOCAL JURISDICTION'S CODE.

5. ALL OPEN AREAS WITHIN LIMITS OF CONSTRUCTION AND CONSTRUCTION EASEMENTS SHALL BE SODDED WITH BAHIA SOD BY CONTRACTOR UNLESS OTHERWISE NOTED ON PLANS.

6. ALL CONCRETE PIPE JOINTS SHALL BE WRAPPED WITH 4' OF FILTER FABRIC CENTERED ON EACH JOINT.

7. CONTRACTOR SHALL DEWATER WHERE REQUIRED TO MEET TECHNICAL REQUIREMENTS.

8. ALL CONCRETE STORM SEWER PIPE TO BE REINFORCED CONCRETE PIPE CLASS III, EXCEPT WHERE OTHERWISE NOTED ON THE PLANS OR REQUIRED BY JURISDICTION. HDPE STORM PIPE SHALL BE APPROVED BY JURISDICTION AND ENGINEER AND SHALL MEET ASTM-477. PVC STORM PIPE SHALL BE

9. GEOTECHNICAL SERVICES HAVE BEEN PROVIDED AS REFERENCED BELOW. GEOTECHNICAL RECOMMENDATIONS ARE NOT THE RESPONSIBILITY OF WICKS ENGINEERING SERVICES, INC. AND HAS RELIED ON THE BELOW REFERENCED GEOTECHNICAL REPORT'S IN PREPARATION OF THE DRAWINGS. ANY CONFLICT BETWEEN INFORMATION WITHIN THE REPORT AND THESE DRAWINGS SHALL BE REPORTED TO ENGINEER/OWNER. WICKS ENGINEERING SERVICES, INC. ASSUMES NO RESPONSIBILITY FOR THE CORRECTNESS, COMPLETENESS OR ACCURACY OF GEOTECHNICAL INFORMATION.

10. GEOTECHNICAL REPORT PREPARED BY: ANDREYEV ENGINEERING, INC. REPORT #: N/A REPORT DATE: N/A

11. ALL OFF-SITE DISTURBED AREAS SHALL BE RESTORED TO PRE-CONSTRUCTION CONDITION, OR BETTER.

12. ALL STORM STRUCTURES SHALL CONFORM WITH FDOT STANDARD INDEX DRAWINGS AND SPECIFICATIONS EXCEPT THAT DITCH BOTTOM INLETS IN PAVED AREAS SHALL HAVE TRAVERSABLE, TRAFFIC BEARING GRATES SUPPORTED BY STEEL ANGLE SEATS OR SUPPORTED ON FOUR SIDES. GRATES SHALL BE CAST IRON UNLESS OTHERWISE SPECIFIED OR APPROVED.

13. EXISTING TOPOGRAPHY BASED ON DRAWING PREPARED BY:
SURVEYOR: MILAM LAND SURVEYING
DRAWING DATED: 4/15/14
PROJECT NUMBER: 14-097

14. ALL STORMWATER STRUCTURES SHALL HAVE CEMENT BENCHING FROM THE BOTTOM OF THE STRUCTURE TO THE LOWEST PIPE INVERT AND SHALL BE SLOPED TO PROVIDE POSITIVE DRAINAGE UNLESS OTHERWISE NOTED.

15. ALL DISTURBED AREAS ON-SITE SHALL BE SODDED WITH SOD OF LIKE TYPE AND QUALITY TO MATCH EXISTING. ALL DISTURBED AREAS OFF-SITE SHALL BE SODDED WITH ARGENTINA BAHIA. ALL SOD SHALL BE NON-MUCK FARM GROWN.

ROUTINE MAINTENANCE -- STORMWATER

1. AFTER COMPLETION OF CONSTRUCTION, WRA'S WILL BE MOWED AND MAINTAINED AS PART OF THE NORMAL LAWN AND OPEN SPACE MAINTENANCE.

2. TRASH AND DEBRIS THAT ACCUMULATES WITHIN THE WRA'S, SWALES, PIPES, AND INLETS WILL BE MANUALLY COLLECTED AND DISPOSED OF WITH OTHER NORMAL SOLID WASTE.

3. ANY EROSION, LOSS OF GRASS, ETC., WILL BE REPAIRED OR REPLACED ROUTINELY AND AS NEEDED.

4. PIPES, INLETS, FLUMES, AND OTHER CONTROL DEVICES WILL BE INSPECTED ANNUALLY AND REPAIRS MADE AS NEEDED.

5. BEST MANAGEMENT PRACTICES SHALL BE USED TO ASSURE EROSION AND SEDIMENT IS CONTROLLED. ADDITIONAL MEASURES MAY BE REQUIRED DURING CONSTRUCTION.

TREE PROTECTION REQUIREMENTS

1. PROTECT DESIGNATED EXISTING TREES AGAINST:
   - UNNECESSARY CUTTING, BREAKING, OR SKINNING OF ROOTS
   - SKINNING AND BRUISING OF BARK
   - SMOTHERING OF TREES BY STOCKPILING CONSTRUCTION OR EXCAVATION MATERIALS WITHIN DRIP-LINE
   - EXCESS FOOT OR VEHICULAR TRAFFIC
   - PARKING VEHICLES WITHIN DRIP-LINE

2. ERECT TEMPORARY TREE PROTECTION FENCING AS SHOWN ON THE DETAIL SHEETS. BEFORE COMMENCEMENT OF ANY SITE CLEARING OR GRADING. ALL FENCING SHOULD BE A MINIMUM OF 10' CLEAR DISTANCE FROM THE FACE OF ANY TREES AND SHALL FULLY ENCLOSE ALL TREES SCHEDULED TO REMAIN. NOTHING SHALL BE PLACED INSIDE OF PROTECTIVE BARRICADES, INCLUDING BUT NOT LIMITED TO CONSTRUCTION MATERIAL, MACHINERY, CHEMICALS, OR TEMPORARY SOIL DEPOSITS. ON TREES LARGER THAN 20' DBH, BARRICADES SHALL BE NO CLOSER THAN 15' FROM FACE OF TREE. WHEN PAVING, EXCAVATION OR HARDSCAPE MUST BE DONE WITHIN BARRICADES, BARRICADES SHALL BE MOVED BACK TO A SECONDARY LOCATION AT EDGE OF WORK. EXTRA CARE MUST BE TAKEN AT THIS TIME BY THE CONTRACTOR TO ENSURE THAT NO DAMAGE TO THE TREE OCCURS.

3. PROVIDE WATER TO TREES AS REQUIRED TO MAINTAIN THEIR HEALTH DURING CONSTRUCTION WORK.

4. WHEN NECESSARY TO CUT ROOT OVER 1-1/2" DIAMETER OF TREES TO REMAIN, CUT MUST BE A CLEAN CUT, COAT CUT FACES OF ROOTS WITH AN EMULSIFIED ASPHALT OR OTHER ACCEPTABLE COATING FORMULATED FOR USE ON DAMAGED PLANT TISSUE. TEMPORARILY COVER EXPOSED ROOTS WITH WET BURLAP TO PREVENT DRYING AND COVER WITH EARTH AS SOON AS POSSIBLE.

5. NO GRADE CHANGES ARE TO BE MADE WITHIN THE BARRICADES WITHOUT PRIOR APPROVAL OF THE OWNER OR HIS DESIGNATED REPRESENTATIVE.

6. INTERFERING BRANCHES MAY BE REMOVED AT THE DIRECTION OF THE OWNER OR HIS DESIGNATED REPRESENTATIVE BY A QUALIFIED TREE SURGEON.

7. REPAIR OR REPLACE TREES INDICATED TO REMAIN, WHICH ARE DAMAGED IN THE CONSTRUCTION OPERATIONS, IN A MANNER ACCEPTABLE TO THE OWNER. EMPLOY A QUALIFIED TREE SURGEON TO REPAIR MAJOR DAMAGES TO TREES AND SHRUBS, PROMPTLY, TO PREVENT PROGRESSIVE DETERIORATION'S CAUSED BY THE DAMAGE.

8. GENERAL CONTRACTOR SHALL BE RESPONSIBLE FOR THE REPLACEMENT OF TREES DAMAGED BEYOND REPAIR WITH 3 TREES OF SIMILAR QUALITY AND SPECIES, SIZED TO MATCH THE LARGEST TREES OF THAT SPECIES BEING PLANTED AS PER THE LANDSCAPE PLANS. IF TRESS ARE HARMED THROUGH LACK OF PROTECTION OR THROUGH NEGLIGENCE ON THE PART OF THE CONTRACTOR, THE CONTRACTOR SHALL BEAR THE BURDEN OF THE COST OF REPAIR OR REPLACEMENT.

RECORD DRAWINGS

1. THE CONTRACTOR SHALL PROVIDE THE ENGINEER OF RECORD WITH RECORD SURVEYS OF THE INSTALLED WATER, RECLAIM, WASTEWATER AND STORMWATER SYSTEMS.
REQUIREMENTS ARE AS FOLLOWS:
   a. PERFORMED BY A FLORIDA REGISTERED LAND SURVEYOR.
   b. SIX SIGNED AND SEALED RECORD DRAWINGS SHALL BE PROVIDED TO THE ENGINEER OF RECORD.
   c. ELECTRONIC FORMATS OF THE RECORD DRAWINGS SHALL BE IN AUTOCAD 2000 OR HIGHER. A COPY OF THE ELECTRONIC FILES SHALL BE PROVIDED TO THE ENGINEER OF RECORD. IT IS PREFERRED TO USE THE APPROVED PLANS WITH STRIKE THROUGH CORRECTIONS.

2. REQUIRED RECORD DRAWING DATA:
   a. WATER, FORCEMAIN & RECLAIMED WATER LINE LOCATIONS, SIZE AND MATERIALS.
   b. LOCATION OF WATER, FORCEMAIN, RECLAIMED WATER & SEWER VALVES AND APPURTENANCES
   c. MANHOLE TOP AND INVERT ELEVATIONS
   d. DEPICT POTABLE WATER LINE CROSSING AND PROVIDE ACTUAL SEPARATION DISTANCES
   e. SAMPLE POINT LOCATIONS IN ACCORDANCE WITH THE FDEP PERMIT.
   f. GRAVITY STORM AND SEWER LOCATIONS, INVERTS, PIPE SIZE AND MATERIALS.
   g. PHOTOS OF ALL UTILITIES CROSSING AND WATER MAINS SHALL BE TAKEN AT THE TIME OF CONSTRUCTION PRIOR TO BACKFILLING.
   h. ALL STORMWATER MANAGEMENT AREAS SHALL BE DETAILED WITH CROSS SECTIONS AND/OR CONTOURS PROVING FINISH GRADE ELEVATIONS.
   i. ALL OUTFALL STRUCTURES SHALL BE VERIFIED WITH SPECIFIC DESIGN ELEVATIONS AS SHOWN ON THE PLANS. (ie. TOPS, WEIRS, ORFICE AND SKIMMERS SHOULD ALL BE VERIFIED.
   j. FINISHED GRADES AT HIGH POINTS AND GRADE BREAKS, BUILDING PADS OR FINISH FLOOR ELEVATIONS.

STANDARD ABBREVIATIONS

ARV	AIR RELEASE VALVE	HP	HIGH POINT
BFP	BACKFLOW PREVENTER	HR	HANDICAPPED RAMP
BOC	BACK OF CURB	INV	INVERT
BTM	BOTTOM	LF	LINEAR FEET
BV	BALL VALVE	LP	LOW POINT
℄	CENTER LINE	LS	LIFT STATION
CMP	CORRUGATED METAL PIPE	MES	MITERED END SECTION
CO	CLEANOUT	MH	MANHOLE
CONC	CONCRETE	NWL	NORMAL WATER LEVEL
DCDVA	DOUBLE CHECK DETECTOR VALVE ASSEMBLY	PIV	POST INDICATOR VALVE
		ℙ	PROPERTY LINE
DIP	DUCTILE IRON PIPE	PV	PLUG VALVE
DHWL	DESIGN HIGH WATER LEVEL	PVC	POLYVINYL CHLORIDE PIPE
EL	ELEVATION	RCP	REINFORCED CONCRETE PIPE
EOP	EDGE OF PAVEMENT	RWM	RECLAIMED/REUSE WATER MAIN
ERCP	ELLIPTICAL REINFORCED CONCRETE PIPE	R/W	RIGHT OF WAY
		SAN	SANITARY
FDC	FIRE DEPARTMENT CONNECTION	SHWT	SEASONAL HIGH WATER TABLE
FFE	FINISHED FLOOR ELEVATION	SP	SAMPLE POINT
FH	FIRE HYDRANT	TOB	TOP OF BANK
FM	FORCE MAIN	TOS	TOE OF SLOPE
GV	GATE VALVE	TYP	TYPICAL
HDPE	HIGH DENSITY POLYETHYLENE	WM	WATER MAIN
DDCA	DOUBLE DETECTOR CHECK ASSEMBLY	RPZ	REDUCED PRESSURE ZONE BACKFLOW DEVICE

KENNETH RANDAL WICKS LICENSE No. 33274 STATE OF FLORIDA PROFESSIONAL ENGINEER

KENNETH R. WICKS, P.E. FL. REG. NO. 33274
DATE: 2/23/15

Wicks Engineering Services, Inc.
225 West Main Street, Tavares, Florida 32778
www.wicksengineering.com (352) 343-8667
C.A. #30062

Village Veranda at Lady Lake, LLC.
Elizabeth Mark
55 Se 2nd Avenue, Suite 301
Delray Beach, Florida 33444

Village Veranda at Lady Lake
General Notes
Lady Lake, Florida 32159

REVISION:	DATE:
1-9-15 TOWN COMMENTS	
2-20-15 FINAL SUBMITTAL	

Drawn: NSR
Checked: KRW
Date: 07-08-14
Scale: AS SHOWN
File No.: 14118

C:\Acad\Wicks\14118 Veranda Village\14118 Total.dwg, 2/21/2015 11:02:56 AM, DWG To PDF.pc3

UTILITY NOTES

1. SHOULD ANY DISCREPANCIES BE DISCOVERED THAT WOULD PREVENT CONSTRUCTION OF NEW IMPROVEMENTS AS SHOWN ON THE DRAWINGS, THE CONTRACTOR SHALL NOTIFY THE ENGINEER WITHIN 48 HOURS FOR A DETERMINATION AS TO THE DISPOSITION OF THE DISCREPANCIES. NO CLAIM WILL BE ALLOWED BY THE CONTRACTOR SHOULD HE FAIL TO PROVIDE THE REQUIRED NOTIFICATION PRIOR TO CONSTRUCTION.

2. THE LOCATION OF ALL EXISTING UTILITIES SHOWN ON THE PLANS HAVE BEEN DETERMINED FROM THE BEST INFORMATION AVAILABLE, AND ARE GIVEN FOR THE CONVENIENCE OF THE CONTRACTOR. PRIOR TO THE START OF ANY CONSTRUCTION ACTIVITY, IT SHALL BE THE CONTRACTOR'S RESPONSIBILITY TO NOTIFY THE VARIOUS UTILITIES AND TO MAKE THE NECESSARY ARRANGEMENTS FOR FIELD VERIFICATION OF THE EXISTING UTILITIES. THE CONTRACTOR SHALL EXERCISE CAUTION WHEN CROSSING ANY UNDERGROUND UTILITY TO ENSURE THE LOCATION AND INTEGRITY OF THE SYSTEM.

3. CONTRACTOR TO COORDINATE WITH UTILITY COMPANIES PRIOR TO ANY CONSTRUCTION ACTIVITY FOR DIG PERMITS, ELECTRICAL PERMITS OR OTHER PERMITS AS APPLICABLE. CONTRACTOR IS TO COORDINATE FULLY WITH UTILITY COMPANIES ON EXACT LOCATION OF UNDERGROUND UTILITIES PRIOR TO EXCAVATION. THE FOLLOWING COMPANIES SHALL BE CONTACTED BY THE CONTRACTOR:

POWER	PROGRESS ENERGY
WATER	TOWN OF LADY LAKE
SANITARY SEWER	TOWN OF LADY LAKE
GAS	TECO PEOPLES GAS
TELEPHONE	BRIGHTHOUSE
CABLE TV	BRIGHTHOUSE

4. ALL PIPING TO HAVE A MINIMUM OF 3' COVER UNLESS OTHERWISE NOTED ON THE PLANS.

5. WHERE PAVEMENT IS REMOVED, THE SURFACING MATERIAL SHALL BE MECHANICAL SAW-CUT PRIOR TO TRENCH EXCAVATION, LEAVING A UNIFORM AND STRAIGHT EDGE, WITH MINIMUM DISTURBANCE TO THE REMAINING ADJACENT SURFACING. IMMEDIATELY FOLLOWING THE SPECIFIED BACKFILLING AND COMPACTION, A TEMPORARY SAND SEAL COAT SURFACE SHALL BE APPLIED TO THE CUT AREAS AND CONTINUE TO PROVIDE A SMOOTH TRAFFIC SURFACE WITH THE EXISTING ROADWAY AND SHALL BE MAINTAINED UNTIL FINAL RESTORATION.

6. DURING CONSTRUCTION OPERATIONS, THE CONTRACTOR SHALL TAKE SPECIAL CARE AND PROVIDE ADEQUATE PROTECTION IN ORDER TO MINIMIZE DAMAGE TO VEGETATION, SURFACED AREAS, AND STRUCTURES WITHIN RIGHT-OF-WAY EASEMENT ON SITE, AND TAKE FULL RESPONSIBILITY FOR THE REPLACEMENT OR REPAIR THEREOF.

WATER DISTRIBUTION

1. EXCAVATED TRENCH BOTTOM(S) SHALL BE FREE OF STICKS, ROOTS, STUMPS, STONES, BOULDERS AND ALL DEBRIS, AND SHALL BE GRADED AND SHAPED FOR CONTINUOUS BEARING OF THE BOTTOM OF THE PIPE SYSTEM WITH ALLOWANCE FOR VALVES, FITTINGS, AND COUPLINGS.

2. UNLESS OTHERWISE SHOWN ON THE PLANS, PIPE SHALL BE MANUFACTURED FROM POLYVINYL CHLORIDE RESIN CONFORMING TO ASTM DESIGNATION D 1784. THE PIPE SHALL BEAR THE NATIONAL SANITATION FOUNDATION (NSF) SEAL FOR POTABLE WATER PIPE. PIPE SHALL MEET THE REQUIREMENTS OF AWWA C900, (D.R. 18) "STANDARD FOR POLYVINYL CHLORIDE (PVC) PRESSURE PIPE, 4 INCHES THROUGH 12 INCHES FOR WATER" AND SHALL BE FURNISHED IN CAST IRON PIPE EQUIVALENT OUTSIDE DIAMETERS WITH RUBBER GASKETED JOINTS AS LISTED C900 STANDARD. DI PIPE SHALL CONFORM WITH AWWA C-150/C-151. POLYVINYL CHLORIDE PIPE LESS THAN 4 INCHES IN DIAMETER SHALL BE IN ACCORDANCE WITH ASTM 1785 (SCHEDULE 40, 80, 120) OR ASTM 2241 (SDR 21, PC 200). DR 14 SHALL BE USED FOR FIRE LINES AND INSTALLED IN ACCORDANCE W/ NFPA 24, 1995.

3. CONNECTIONS FOR PIPE 2" IN DIAMETER AND LARGER SHALL BE RUBBER COMPRESSION RING TYPE. PIPE SHALL BE EXTRUDED WITH INTEGRAL THICKENED WALL BELLS WITHOUT INCREASE IN SDR. RUBBER RING GASKETS SHALL CONSIST OF SYNTHETIC COMPOUNDS MEETING THE REQUIREMENTS OF ASTM DESIGNATION D1869, AND SUITABLE FOR THE DESIGNATED SERVICE. OTHER CONNECTIONS FOR PIPE; SOLVENT WELDED SLEEVE TYPE JOINT. FITTINGS FOR 2 INCH AND SMALLER PIPE SHALL BE P.V.C. SOLVENT WELDED JOINTS. FITTINGS FOR USE WITH P.V.C. PIPE WILL BE CAST IRON OR DUCTILE IRON WITH MECHANICAL JOINT RUBBER COMPRESSION RING TYPE JOINTS. WHERE MECHANICAL JOINT IRON FITTINGS OR DUCTILE IRON PIPE ARE TO INTERFACE WITH PVC PIPE, A TRANSITION GASKET, CLOW F-6340 OR EQUAL, SHALL BE USED. NO P.V.C. FITTINGS WILL BE ALLOWED EXCEPT ON PIPE AND FITTINGS SMALLER THAN 3 INCHES.

4. PVC PIPE CONNECTED TO HEAVY FITTINGS AND/OR RIGID STRUCTURES SHALL BE SUPPORTED SO THAT NO SUBSEQUENT RELATIVE MOVEMENT BETWEEN THE PVC PIPE AT THE JOINT AND THE RIGID STRUCTURE IS POSSIBLE.

5. RESTRAINED JOINTS SHALL BE USED AT ALL BENDS & TEES.

6. BACKFILLING OF THE TRENCH FROM THE BOTTOM UP TO TWELVE (12)INCHES OVER THE TOP OF THE PIPE SHALL BE COMPACTED IN SIX (6) INCH LAYERS USING DRY FRIABLE SOIL (MAXIMUM PARTICLE OR FRAGMENT DIMENSION 1") TO NINETY-FIVE (95) PERCENT MAXIMUM DENSITY. THE REMAINDER OF THE TRENCH SHALL BE BACKFILLED WITH EXCAVATED EARTH MATERIAL (MAXIMUM ROCK OR FRAGMENT DIMENSION 6") IN NINE (9) INCH LAYERS COMPACTED TO NINETY FIVE (95) PERCENT MAXIMUM DENSITY, NINETY-EIGHT (98) PERCENT UNDER AREAS TO BE PAVED. DENSITY DETERMINATIONS SHALL BE MADE IN ACCORDANCE WITH AASHTO SPECIFICATION T-180. MINIMUM COVER OVER THE TOP OF THE PIPE SHALL BE THIRTY-SIX (36) INCHES UNLESS OTHERWISE SHOWN. IF POSSIBLE, JOINTS SHOULD BE LEFT UNCOVERED UNTIL AFTER TESTING HAS BEEN SATISFACTORILY COMPLETED.

7. THE PIPE SYSTEM SHALL BE TESTED AND EXAMINED FOR LEAKAGE IN SECTIONS NOT EXCEEDING 1,000 FEET, AT NOT LESS THAN 150 PSI STATIC PRESSURE, IN ACCORDANCE WITH AWWA C 600 (DIP) C 605 (PVC).

8. AFTER COMPLETION OF CONSTRUCTION AND TESTING, THE WATER SYSTEM SHALL BE DISINFECTED WITH CHLORINE SOLUTION BEFORE ACCEPTANCE FOR DOMESTIC OPERATION. THE AMOUNT OF CHLORINE APPLIED SHALL BE SUFFICIENT TO PROVIDE A DOSAGE SOLUTION OF NOT LESS THAN FIFTY (50) PARTS PER MILLION. PRIOR TO INTRODUCING THE CHLORINE SOLUTION, THE LINE SHALL BE THOROUGHLY FLUSHED WITH CLEAN POTABLE WATER. CHLORINE SOLUTION SHALL BE INTRODUCED IN ACCORDANCE WITH AWWA STANDARD C-651-92 AND SHALL REMAIN IN THE SYSTEM FOR A CONTACT PERIOD OF AT LEAST TWENTY-FOUR (24) HOURS, DURING WHICH TIME EVERY VALVE IN THE SYSTEM SHALL BE OPENED AND CLOSED SEVERAL TIMES TO ASSURE CONTACT WITH EVERY SURFACE OF THE SYSTEM. AFTER COMPLETION OF THE DISINFECTION PROCEDURE, THE SYSTEM SHALL BE FLUSHED USING CHLORINATED WATER FROM THE CENTRAL WATER SUPPLY. SAMPLES SHALL BE TAKEN FROM THE NEW SYSTEM FOR TESTING BY A D.H.R.S. CERTIFIED LAB AND SUBMITTED TO THE ENGINEER FOR SUBMITTAL TO THE DEPARTMENT OF ENVIRONMENTAL PROTECTION FOR CLEARANCE BEFORE IT IS PLACED INTO ACTIVE SERVICE.

9. GATE VALVES SHALL BE MUELLER CLASS 200 RESILIENT SEATED VALVES, OR APPROVED EQUAL, WITH MECHANICAL JOINT ENDS, MANUFACTURED TO MEET OR EXCEED REQUIREMENTS OF AWWA C509, LATEST REVISION. EACH VALVE SHALL BE FITTED WITH A CAST IRON BOX AND COVER

10. FIRE HYDRANT(S) SHALL BE MUELLER STANDARD OR APPROVED EQUAL 3-WAY WITH TWO (2) 2-1/2 INCH HOSE CONNECTIONS AND ONE (1) 4-1/2 INCH PUMPER NOZZLE. MAIN BARREL VALVE SIZE SHALL BE 5-1/4 INCHES. AFTER INSTALLATION THE HYDRANT SHALL BE PAINTED IN ACCORDANCE WITH THE LOCAL FIRE DEPARTMENT REQUIREMENTS.

11. ALL WATER SERVICE LINES TWO (2) INCHES AND UNDER SHALL BE POLYETHYLENE, IDR 9, WITH A PRESSURE RATING OF 160 PSI.

12. ALL PVC WATER MAINS SHALL BE LAID WITH METALIC LOCATING TAPE PLACED 18" ABOVE THE CENTER OF THE WATERLINE. FOR FUTURE LOCATING PURPOSES, #14 COPPER ARMORED POLYGUARD WIRE SHALL BE TAPED TO THE TOP OF THE PIPE AND TERMINATE WITH 12" EXTENDING ABOVE THE TOP OF THE VALVE BOX IN SUCH A MANNER SO AS NOT TO INTERFERE WITH THE VALVE OPERATION.

UTILITY NOTES (CONT)

13. SURVEY AS-BUILT DRAWING IS REQUIRED.

14. DEDICATED FIRE MAINS SHALL BE INSTALLED BY A STATE CERTIFIED FIRE PROTECTION CONTRACTOR PER F.S. 633.021(5)

15. AN APPROVED REDUCED PRESSURE BACKFLOW PREVENTION DEVICE IS REQUIRED FOR THE DOMESTIC WATERLINE (A.S.S.E. 1013). IT WILL BE INSTALLED AT THE POINT OF DELIVERY FROM THE LOCAL CITY OR COUNTY WATER SYSTEM. THE INSTALLER IS RESPONSIBLE FOR TESTING THE DEVICE UPON INSTALLATION BY A CERTIFIED BACKFLOW TESTER WITH THE RESULTS BEING FORWARDED TO THE LOCAL CITY OR COUNTY UTILITY DEPARTMENT.

16. THE IRRIGATION AND FIRE SYSTEMS ARE REQUIRED TO HAVE AN APPROVED DOUBLE CHECK VALVE ASSEMBLY (A.S.S.E. 1015). IT WILL BE INSTALLED AT THE POINT OF DELIVERY FROM THE LOCAL UTILITIES WATER SYSTEM, IN THE HORIZONTAL POSITION. THE INSTALLER IS RESPONSIBLE FOR TESTING THE DEVICE UPON INSTALLATION BY A CERTIFIED BACKFLOW TESTER WITH THE RESULTS BEING FORWARDED TO THE LOCAL UTILITY DEPARTMENT.

17. ALL WATER MAIN MATERIALS AND APPURTENANCES SHALL CONFORM TO AND SHALL BE INSTALLED, TESTED AND CLEARED FOR SERVICE IN ACCORDANCE WITH THE STANDARDS OF THE LOCAL JURISDICTION AND THE FLORIDA DEPARTMENT OF ENVIRONMENTAL PROTECTION AGENCY.

18. IT IS THE CONTRACTORS RESPONSIBILITY TO MAINTAIN A COPY OF THE FDEP WATER AND SEWER PERMITS ON SITE AT ALL TIMES AND PERFORM BACTERIOLOGICAL TESTING (B.T.) AFTER DISINFECTION IN ACCORDANCE WITH THE FDEP WATER PERMITS. IT IS THE RESPONSIBILITY OF THE CONTRACTOR CONTRACTOR TO SUBMIT A SET OF AS-BUILT WATER AND SEWER DRAWINGS TO THE ENGINEER. THE AS-BUILT WATER DRAWING WILL NEED TO BE PREPARED PER CITY OR COUNTY REQUIREMENTS. THE AS-BUILT SURVEY/ DRAWINGS WILL NEED TO BE PREPARED, SIGNED AND SEALED BY A FLORIDA REGISTERED SURVEYOR.

19. THE CONTRACTOR SHALL PROTECT THE EXISTING ACTIVE WATER MAIN FROM BACKFLOW CONTAMINATION DURING FILLING, FLUSHING, TESTING AND MAINTAIN A MINIMUM PRESSURE OF 20 PSI IN THE NEW MAINS DURING CONSTRUCTION. ALL PROTECTION METHODS SHALL CONFORM TO THE LOCAL UTILITY COMPANIES, FDEP, AND AWWA STANDARD SPECIFICATIONS.

20. UPON COMPLETION OF THE WATER DISTRIBUTION SYSTEM CONTRACTOR SHALL FURNISH TO THE LOCAL FIRE DISTRICT AND ENGINEER CERTIFIED FIRE FLOW DATA FOR ALL FIRE HYDRANTS WITHIN THE PROJECT.

21. ALL WATER PIPE NEW OR RELOCATED SHALL BE COLOR CODED OR DETAIL MARKED USING BLUE AS PREDOMINANT COLOR TO DIFFERENTIATE DRINKING WATER FROM RECLAIMED OR OTHER WATER. RECLAIMED WATER PIPING SHALL BE PURPLE COLORED PIPE.

22. ALL WATER MAIN MATERIAL AND APPURTENANCES, PIPES, JOINTING AND PACKING MATERIAL INTERNAL COATING, AND LININGS, FITTINGS, AND APPURTENANCES SHALL BE IN THE ACCORDANCE WITH THE CORRESPONDING AWWA STANDARDS AND BE CONFORMING TO NSF REQUIREMENTS IN COMPLIANCE WITH PARAGRAPH 62-555 FLORIDA ADMINISTRATIVE CODE.

23. ALL WATER MAIN MATERIALS AND APPURTENANCES SHALL COMPLY WITH THE LEAD USE PROHIBITION RULE IN 62-555.322 FLORIDA ADMINISTRATIVE CODE.

24. BLUE HYDRANT MARKERS SHALL BE INSTALLED AT EACH NEW FIRE HYDRANT PER LADY LAKE LDC.

25. EACH BACKFLOW PREVENTOR SHALL HAVE TAMPER SWITCHES INSTALLED AND TIED TO THE FIRE ALARM SYSTEM.

GENERAL SPECIFICATION NOTES:

1. THE TOWN OF LADY LAKE SPECIFICATIONS WILL TAKE PRECEDENCE IF THEY ARE MORE STRINGENT THAN THESE SPECIFICATIONS.
2. THE CONTRACTOR IS RESPONSIBLE FOR VERIFICATION OF ALL UTILITIES PRIOR TO THE START OF CONSTRUCTION.

FORCEMAIN NOTES

1. FORCEMAIN PIPE SHALL BE INSTALLED AND MAINTAINED AT A 3' MINIMUM DEPTH THROUGH-OUT PROJECT EXCEPT WHERE SHOWN ON PLANS AND APPROVED SPECIFICATIONS. MAINTAIN 12" BELOW WATER MAIN.

2. FORCEMAIN PIPE TO BE PVC C900, DR18 CLASS 100 AWWA.

3. EXCAVATED TRENCH BOTTOM(S) SHALL BE FREE OF STICKS, ROOTS, STUMPS, STONES, BOULDERS AND ALL DEBRIS AND SHALL BE GRADED AND SHAPED FOR CONTINUOUS BEARING OF THE BOTTOM OF THE PIPE SYSTEM WITH ALLOWANCE FOR VALVES, FITTINGS AND COUPLINGS.

4. PVC SEWER MAINS SHALL BE LAID WITH METALLIC TAPE PLACED 18" ABOVE THE CENTER OF THE FORCEMAIN WITH CONTINUOUS MARKING "CAUTION SEWAGE PRESSURE LINE" FOR FUTURE LOCATING PURPOSES. #10 COPPER ARMORED POLYGUARD WIRE SHALL BE TAPED TO THE TOP OF THE PIPE AND TERMINATE WITH 12" EXTENDING ABOVE THE TOP OF THE LIFT STATION VALVE BOX.

5. THE PIPE SYSTEM SHALL BE TESTED AND EXAMINED FOR LEAKAGE IN SECTIONS NOT EXCEEDING 1,000 FEET, AT NOT LESS THAN 100 PSI STATIC PRESSURE, IN ACCORDANCE WITH AWWA C 600 (DIP) C 605 (PVC).

ALLOWABLE LEAKAGE = L = (ND P)/7400 DURATION 2 HOURS.
L = ALLOWABLE LEAKAGE GPM/HR
N = # OF JOINTS IN LENGTH TESTED
P = AVERAGE TEST PRESSURE (PSI)
D = NOMINAL DIAMETER OF PIPE (IN)

SANITARY GRAVITY SEWER

THE SEWER SYSTEM SHALL COMPLY WITH THE APPLICABLE REQUIREMENTS SPECIFIED WITHIN W.P.C.F. MANUAL OF PRACTICE NO. 9, AND CHAPTER 20 OF THE TEN-STATE STANDARDS--RECOMMENDED STANDARDS FOR SEWAGE WORKS AND F.A.C. 17-6.050 COLLECTION/TRANSMISSION SYSTEMS, FDEP RULES. ALL MATERIALS TO BE FURNISHED BY CONTRACTOR.

1. PRECAST REINFORCED MANHOLES SHALL BE IN ACCORDANCE WITH ASTM DESIGNATION C-478, WITH PREFORMED FLEXIBLE PLASTIC JOINT SEALER CONFORMING TO FEDERAL SPECIFICATION SS-5-0210 (GSA-FSS), "RAM-NEK", AS MANUFACTURED BY THE K.T. SNYDER CO., INC.; HOUSTON, TEXAS, OR APPROVED EQUAL. COMPACTION PRIOR TO MANHOLE PLACEMENT SHALL BE NOT LESS THAN 98% OF MAXIMUM DENSITY.

2. MANHOLE FRAMES AND COVERS SHALL BE GRAY CAST IRON CONFORMING TO ASTM A 48, CLASS 30. COVERS SHALL HAVE NO PERFORATIONS AND SHALL BE FOUNDRY MARKED WITH THE WORD "SEWER". FRAMES AND COVERS SHALL BE FULLY BEDDED IN MORTAR TO THE CORRECT FINISH GRADE ELEVATION, WITH ADJUSTMENT BRICK COURSES PLACED BELOW, AS PER DETAIL FOR PRECAST MANHOLES. THERE ARE TO BE NO STEPS IN MANHOLES. ALL MANHOLE COVERS AND FRAMES SHALL BE TRAFFIC BEARING TO MEET AASHTO H-20 LOADINGS.

3. MANHOLE FLOW-CHANNELS SHALL HAVE SMOOTH AND CAREFULLY SHAPED BOTTOMS, BUILT-UP SIDES, AND BENCHING CONSTRUCTED FROM CONCRETE. CHANNELS SHALL CONFORM TO THE DIMENSIONS OF THE ADJACENT PIPE AND PROVIDE CHANGES IN SIZE, GRADE, AND ALIGNMENT EVENLY.

4. THE INTERIOR SURFACES OF ALL MANHOLES SHALL BE PROTECTED BY THE APPLICATION OF TWO (2) COATS OF KOPPERS BITUMASTIC NO. 300M, OR APPROVED EQUAL. EXTERIOR SURFACES SHALL RECEIVE TWO (2) COATS OF KOPPERS BITUMASTIC BLACK SOLUTION OR APPROVED EQUAL.

SANITARY GRAVITY SEWER

5. MANHOLES SHALL NOT BE LOCATED IN DRAINAGE SWALES OR ANY OTHER LOW AREA LIKELY TO COLLECT OR POND WATER DURING RAINS UNLESS APPROVED BY THE ENGINEER.

6. WHERE SANITARY SEWERS CONNECT TO STRUCTURES, PIPE JOINT BELL SHALL NOT BE INSTALLED AT THE WALL FACE. CORE BORE INTO THE EXISTING MANHOLE AND USE KOR-N-SEAL FLEXIBLE CONNECTORS OR APPROVED EQUAL WITH STAINLESS STEEL STRAPS ON ALL PIPE TO MANHOLE CONNECTORS.

7. PIPE MATERIAL SHALL BE PVC GRAVITY SEWER PIPE, ASTM D3034, SDR 35. THE JOINTS SHALL BE INTEGRAL BELL ELASTOMERIC GASKET JOINTS MANUFACTURED IN ACCORDANCE WITH ASTM D3212 AND ASTM F477. ALL PVC PIPE SHALL BEAR THE NSF-DW SEAL. THE MINIMUM STANDARD LENGTH OF PIPE SHALL BE THIRTEEN (13) FEET.

8. ALL PVC PIPE SHALL REQUIRE INSULATED METALLIC LOCATING WIRE, #10 GAUGE COPPER, CAPABLE OF DETECTION BY A CABLE LOCATOR. THE WIRE SHALL BE TAPED TO THE PIPE DIRECTLY ABOVE THE CENTERLINE.

9. THE MINIMUM ALLOWABLE COVER FOR GRAVITY SEWERS SHALL BE 3.0' FROM THE TOP OF THE PIPE TO FINISH GRADE.

10. WHERE PIPES OF ALTERNATE MATERIALS ARE TO BE CONNECTED BETWEEN MANHOLES, SUITABLE APPROVED TRANSITION COUPLINGS SHALL BE INSTALLED. THE CUTTING OF PIPE SHALL BE PERFORMED WITH THE PROPER TOOLS AND BY MANUFACTURER'S RECOMMENDED METHOD.

11. GRAVITY SEWER PIPE BEDDING SHALL BE IN COMPLIANCE WITH ASTM D2321-74, BEDDING AND BACKFILL COMPACTION DENSITY TO 95% MODIFIED PROCTOR AASHTO T-180 & ASTM D-1557.

12. WHEN TRENCHES ARE CUT IN PAVEMENTS, COMPACTION AS DETERMINED BY AASHTO SPECIFICATION T-180, SHALL BE FOR EACH 6-INCH BACKFILL LIFT, EQUAL TO 98 PERCENT OF MAXIMUM DENSITY, WITH COMPACTION IN OTHER AREAS NOT LESS THAN 95 PERCENT OF MAXIMUM DENSITY. DENSITY TEST RESULTS SHALL BE PROVIDED TO THE ENGINEER FOR TRENCHES WITHIN PAVEMENT OR ACROSS ROADS.

13. PAVEMENT OR ROADWAY SURFACES CUT OR DAMAGED SHALL BE REPLACED BY THE CONTRACTOR IN EQUAL OR BETTER CONDITION THAN THE ORIGINAL.

14. CASING PIPES CROSSING UNDER TOWN, COUNTY, OR STATE ROADWAYS SHALL BE INSTALLED WITHIN BORED AND JACKED STEEL CASING PIPE WITH A MINIMUM OF 36 INCHES DEPTH OF COVER BETWEEN THE TOP OF THE CASING PIPE AND THE SURFACE OF THE ROADWAY WITH CASING ENDS EXTENDING A MINIMUM OF 6 FEET BEYOND THE EDGE OF PAVEMENT. CASINGS SHALL BE NEW PRIME STEEL PIPE CONFORMING TO ASTM DESIGNATION A-139, GRADE B. THE MINIMUM CASING SIZE AND THICKNESS SHALL BE: OUTSIDE DIAMETER 20 INCHES, WALL THICKNESS 0.250 INCHES.

15. SHEETING & BRACING -- PROCEDURES AND MATERIALS USED FOR SHEETING, SHEET PILING, CRIBBING, BRACING, SHORING AND UNDERPINNING SHALL BE IN GOOD SERVICEABLE CONDITION AND INSTALLED AS REQUIRED BY OSHA REGULATIONS.

16. SEWER CLEAN-OUTS NOT IN THE PAVEMENT SHALL HAVE AROUND THEIR TOPS CONCRETE PADS, WHICH WILL BE FLUSH WITH THE TOP OF THE CURB, WITH MINIMUM DIMENSIONS OF 24 BY 24 BY 4 INCHES.

17. SERVICE CONNECTIONS -- INSTALLATION SHALL BE PERFORMED BY THE PROPER METHODS, INCLUDING THE WYE BRANCHES INSTALLED IN THE SEWER MAIN AT THE POINT OF CONNECTION, AND THE SERVICE PIPE AND REQUIRED FITTINGS EXTENDED TO THE PROPERTY LINE, PERPENDICULAR TO SAID LINE, TERMINATING WITH STOPPERED ENDS OR FITTINGS. THE MINIMUM SERVICE PIPE SIZE SHALL BE 6 INCHES IN DIAMETER AND MAY PROVIDE FOR SINGLE OR DOUBLE CONNECTIONS. ON CURBED STREETS, THE EXACT LOCATION FOR EACH INSTALLED SERVICE SHALL BE MARKED BY ETCHING OR CUTTING AN "S" IN THE CONCRETE CURB AND PAINTED GREEN. WHERE NO CURB EXISTS OR IS PLANNED, LOCATIONS SHALL BE ADEQUATELY MARKED BY A METHOD APPROVED BY THE ENGINEER.

18. SURVEYED AS-BUILT DRAWING IS REQUIRED BY A REGISTERED SURVEYOR PRIOR TO FINAL CERTIFICATION OF CONSTRUCTION.

19. TESTING (SEWER)

A) THE CONTRACTOR SHALL PERFORM TESTING OF ALL SANITARY GRAVITY SEWERS, AS SET FORTH IN THE FOLLOWING, AND SHALL CONDUCT SAID TESTS IN THE PRESENCE OF REPRESENTATIVES FROM WICKS CONSULTING SERVICES, INC., WITH 48 HOURS ADVANCE NOTICE PROVIDED.

B) SANITARY SEWERS TO BE TESTED SHALL BE WITHIN SECTIONS. TESTING SHALL NOT PROCEED UNTIL ALL FACILITIES ARE IN PLACE AND CONCRETE CURED. ALL PIPING SHALL BE THOROUGHLY CLEANED PRIOR TO TESTING TO CLEAR THE LINES OF ALL FOREIGN MATTER.

C) INFILTRATION SHALL NOT EXCEED 200 GALLONS PER DAY PER INCH OF DIAMETER PER MILE AS MEASURED BETWEEN MANHOLES.
TESTING SHALL PROCEED FOR A CONTINUOUS PERIOD OF TWO (2) HOURS, WITH INFILTRATION AMOUNTS MEASURED BY METHODS APPROVED WICKS CONSULTING SERVICES, INC.,

D) SHOULD ANY TEST FAIL, NECESSARY REPAIRS SHALL BE ACCOMPLISHED BY THE CONTRACTOR, AND THE TEST REPEATED UNTIL THE ESTABLISHED LIMITS ARE MET.

E) ALL SANITARY GRAVITY SEWER LINES SHALL BE LAMPED.

F) AS-BUILT PLANS TO BE FURNISHED TO WICKS CONSULTING SERVICES, INC., UPON COMPLETION OF PROJECT, WITH ACTUAL LINEAR MEASUREMENTS FROM PERMANENT POINTS TO ALL SEWER SYSTEMS COMPONENTS, INCLUDING ACTUAL LINEAR MEASUREMENTS FROM PERMANENT POINTS TO ALL SEWER SYSTEMS COMPONENTS, INCLUDING LOCATION OF EACH LATERAL. AS-BUILT DATA SHALL BE COLLECTED BY A REGISTERED LAND SURVEYOR.

KENNETH RANDAL WICKS LICENSE No. 33274 STATE OF FLORIDA PROFESSIONAL ENGINEER

KENNETH R. WICKS, P.E. FL. REG. NO. 33274
DATE: 2/23/15

Wicks Engineering Services, Inc.
225 West Main Street, Tavares, Florida 32778
www.wicksengineering.com (352) 343-8667
C.A. #30062

Village Veranda at Lady Lake, LLC.
Elizabeth Mark
55 Se 2nd Avenue, Suite 301
Delray Beach, Florida 33444

Village Veranda at Lady Lake
General Utility Notes
Lady Lake, Florida 32159

Drawn: NSR	REVISION:	DATE:
Checked: KRW	1-9-15 TOWN COMMENTS	
Date: 07-08-14	2-20-15 FINAL SUBMITTAL	
Scale: AS SHOWN		
File No.: 14118		

C:\Acad\Wicks\14118 Veranda Village\14118 Total.dwg, 2/21/2015 11:03:19 AM, DWG To PDF.pc3

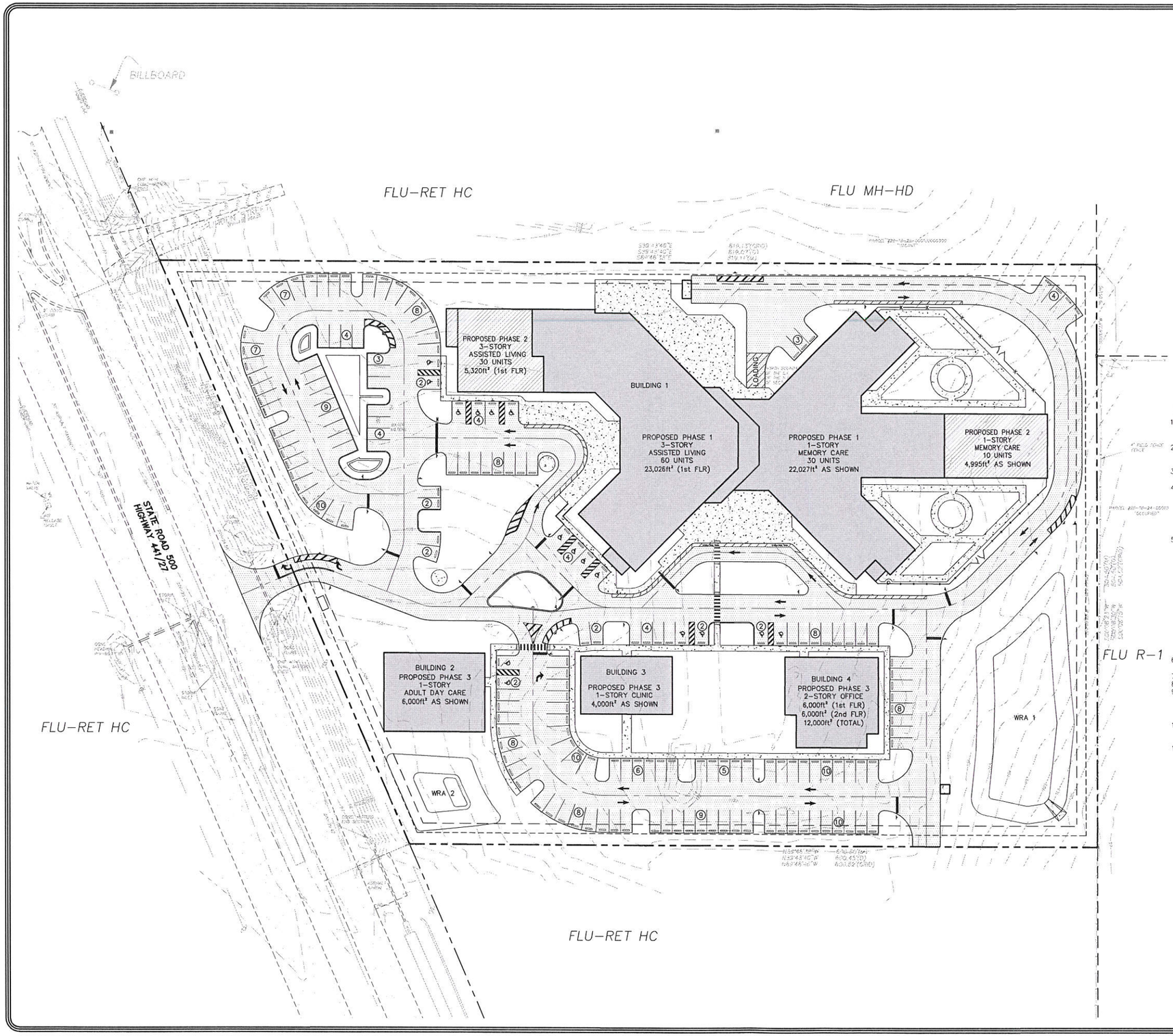

NORTH

GRAPHIC SCALE

40 20 0 40 80

(IN FEET)

LEGEND

- PROPERTY LINE
- ℄ PROPOSED ROAD
- 10' EASEMENT LINE
- 18' BUILDING SETBACK
- WALL
- CONCRETE PAVEMENT
- NEW BUILDING
- NEW PAVEMENT

NOTES

1. TOTAL PROJECT AREA – 358,093 ft² – 8.22 ac.±
   PROPOSED PERVIOUS AREA – 153,968 ft² – 3.53 ac. (43%)
   PROPOSED IMPERVIOUS AREA – 204,125 ft² – 4.69 ac. (57%)
2. ZONING:
   EXISTING – CP
   ADJACENT – HC, MH9 & R-1 (Lake County)
3. FLU DESIGNATION – COMMERCIAL-GENERAL
   URBAN MEDIUM (Lake County)
4. PROPOSED ADULT LIVING CAMPUS – 1-3 STORY BUILDINGS
   BLDG 1 – 112,060 FT²
   BLDG 2 – 6,000 FT²
   BLDG 3 – 4,000 FT²
   BLDG 4 – 12,000 FT²
   TOTAL – 134,060 FT²
5. PARKING:
   TOWN CODE – 1 SPACE PER EMPLOYEE ON LARGEST SHIFT
   1 SPACE PER 2 BEDS
   REQUIRED:
   PHASE 1 – 90 BEDS = = 45 SPACES
   PHASE 1 – 20 EMPLOYEES = 20 SPACES
   PHASE 2 – 40 BEDS = 20 SPACES
   PHASE 3 – OFFICE/MEDICAL/ADULT DAY CARE (1 SPACE PER 200 FT²)
   31,854 FT² = 159 SPACES
   REQUEST JOINT USE PARKING
   PROVIDED:
   HANDICAPPED 12'x20' – 16
   REGULAR 10'x20' – 159
   TOTAL – 175
6. WATER AND SEWER TO BE SUPPLIED BY TOWN OF LADY LAKE (WATER & SEWER)
7. STORMWATER MANAGEMENT – DRY RETENTION
8. PROJECT SOILS: APOPKA SAND, KENDRICK SAND & CANDLER SAND
9. SETBACKS:
   FRONT – 18'
   SIDES – 20'
   REAR – 20'
10. BOUNDARY AND TOPOGRAPHIC SURVEY PROVIDED BY:
    Gary L. Milam
    Dated April 15, 2014
11. THERE ARE NO WETLANDS OR FLOOD PRONE AREAS ON SITE.

KENNETH RANDAL WICKS
LICENSE
No. 33274
STATE OF
FLORIDA
PROFESSIONAL ENGINEER

KENNETH R. WICKS, P.E. FL. REG. NO. 33274
DATE: 2/23/15

Wicks Engineering Services, Inc.
225 West Main Street, Tavares, Florida 32778
www.wicksengineering.com (352) 343-8667
C.A. #30062

Village Veranda at Lady Lake, LLC.
Elizabeth Mark
55 Se 2nd Avenue, Suite 301
Delray Beach, Florida 33444

Village Veranda at Lady Lake
Site Plan
Lady Lake, Florida 32159

REVISION:	DATE:
1-9-15 TOWN COMMENTS	
2-20-15 FINAL SUBMITTAL	

Drawn: NSR
Checked: KRW
Date: 07-08-14
Scale: AS SHOWN
File No.: 14118

Sheet: 6 of 16

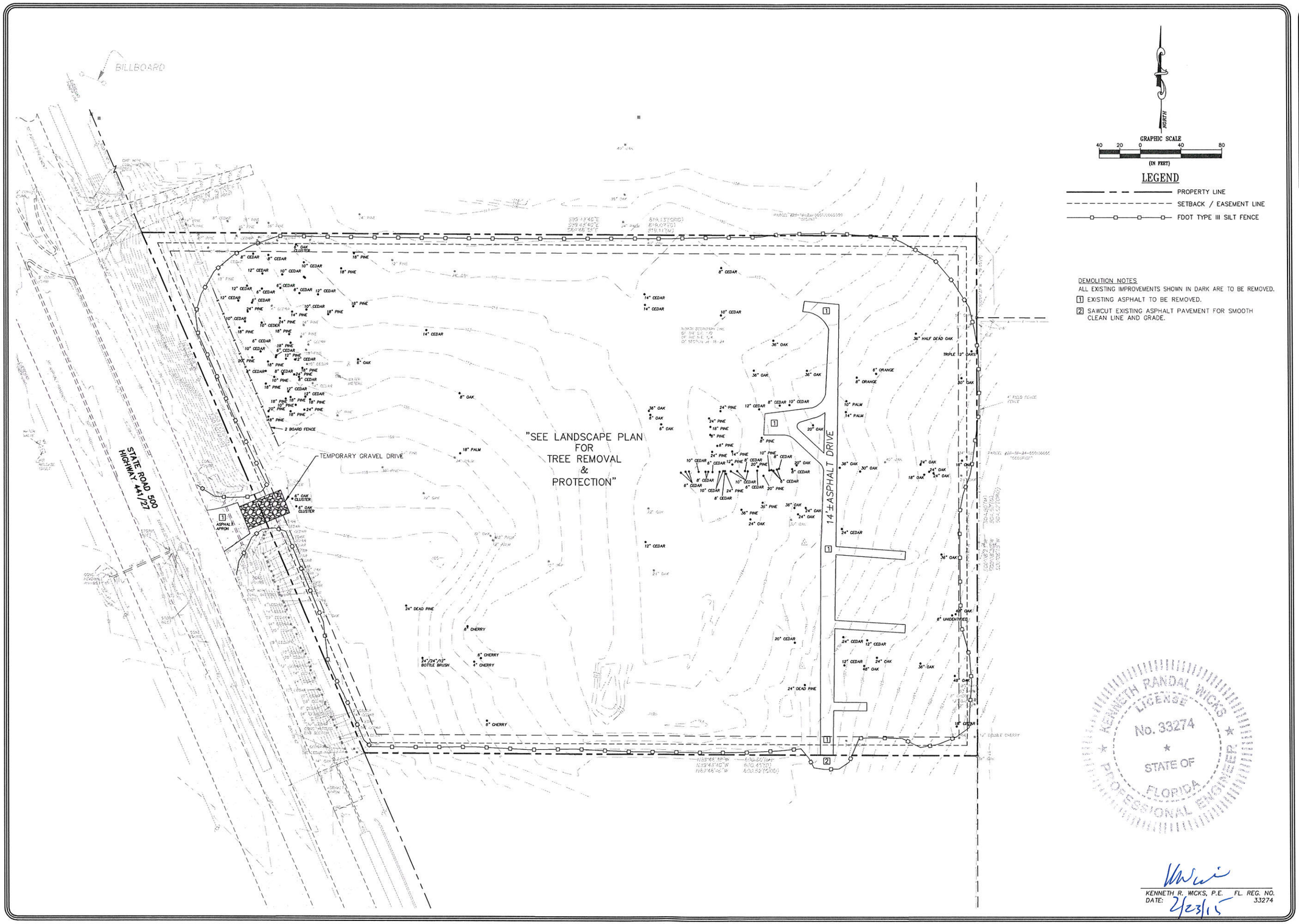

KENNETH R. WICKS, P.E. FL. REG. NO. 33274
DATE: 2/23/15

Wicks Engineering Services, Inc.
225 West Main Street, Tavares, Florida 32778
www.wicksengineering.com (352) 343-8667
C.A. #30062

Village Veranda at Lady Lake, LLC.
Elizabeth Mark
55 Se 2nd Avenue, Suite 301
Delray Beach, Florida 33444

Village Veranda at Lady Lake
Demo & Erosion Control Plan
Lady Lake, Florida 32159

REVISION:	DATE:
1-9-15 TOWN COMMENTS	
2-20-15 FINAL SUBMITTAL	

Drawn: NSR
Checked: KRW
Date: 07-08-14
Scale: AS SHOWN
File No.: 14118

Sheet: 7 of 16

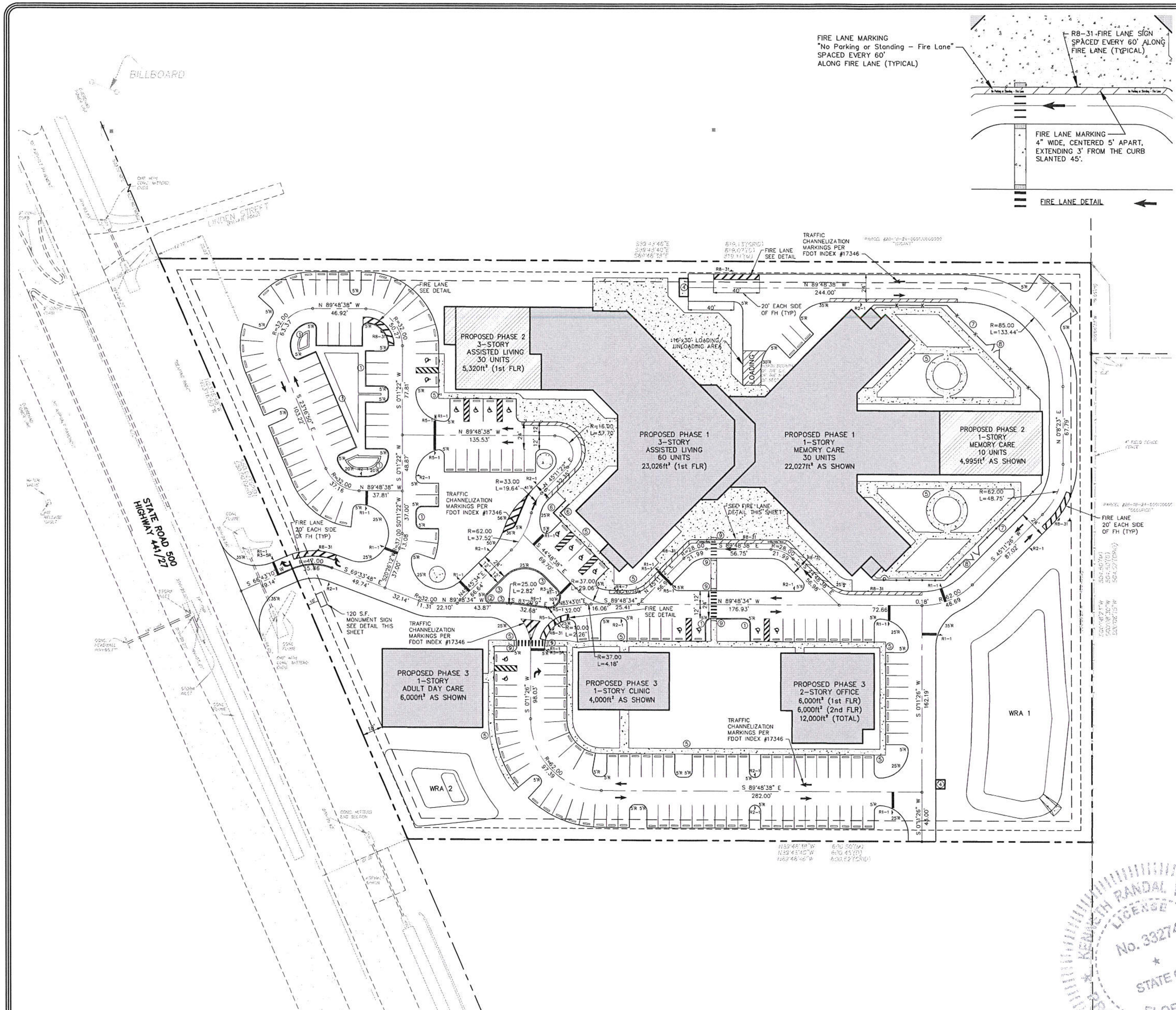

LEGEND

- PROPERTY LINE
- ℄ PROPOSED ROAD
- 10' EASEMENT LINE
- 18' BUILDING SETBACK
- WALL
- CONCRETE PAVEMENT
- NEW BUILDING

① TYPE "D" CURB PER FDOT INDEX #300
② 12" RIBBON CURB
③ GRAVITY WALL
④ 24'x12' DUMPSTER (DOUBLE) 12'x12' DUMPSTER (SINGLE)
⑤ 5' CONCRETE SIDEWALK
⑥ HANDRAIL
⑦ 6' BLACK VINYL CHAIN LINK FENCE
⑧ 8' DOUBLE SWING GATE
⑨ CURB RAMP DETECTABLE WARNING

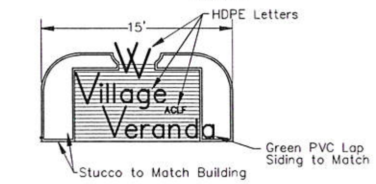

MOINUMENT SIGN

SIGNAGE & MARKING

WHITE – 24" STOP BAR AND STOP SIGN (R1–1)

TRAFFIC SIGN

WHITE – 1'x(MATCH SIDEWALK WIDTH) CROSSWALK MARKINGS @ 3' O.C.

PAVEMENT MARKINGS SHOWN SHALL BE DONE IN CONFORMANCE WITH FDOT INDEX # 17346

ALL SIGNS ARE IN ACCORDANCE TO THE MANUAL ON UNIFORM TRAFFIC CONTROL DEVICES

R1–1 = 30" x 30" OCTAGONAL STOP SIGN
R4–7 = 24" x 30" RECTANGULAR KEEP RIGHT OF MEDIAN SIGN
R6–1 = 18" x 24" RECTANGULAR ONE–WAY SIGN
R5–1 = 30" x 30" SQUARE DO NOT ENTER SIGN
R3–5L = 24" x 30" RECTANGULAR LEFT TURN ONLY SIGN
R3–5R = 24" x 30" RECTANGULAR RIGHT TURN ONLY SIGN
R4–7bR = 24" x 30" RECTANGULAR KEEP RIGHT SIGN
R2–1 = 24" x 30" RECTANGULAR SPEED LIMIT SIGN
R8–31 = 18" x 240" RECTANGULAR FIRE LANE SIGN

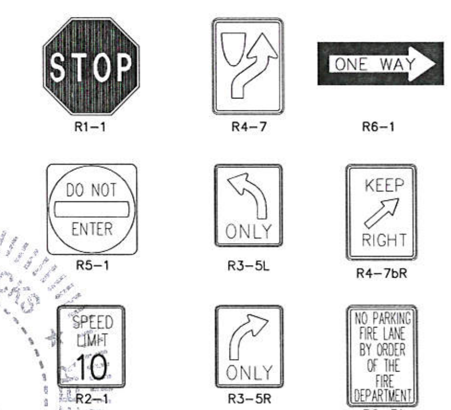

KENNETH RANDAL WICKS LICENSE No. 33274 STATE OF FLORIDA PROFESSIONAL ENGINEER

KENNETH R. WICKS, P.E. FL. REG. NO. 33274
DATE: 2/23/15

Wicks Engineering Services, Inc.
225 West Main Street, Tavares, Florida 32778
www.wicksengineering.com (352) 343-8667
C.A. #30062

Village Veranda at Lady Lake, LLC.
Elizabeth Mark
55 Se 2nd Avenue, Suite 301
Delray Beach, Florida 33444

Village Veranda at Lady Lake Signing, MArking & Geometry Plan Lady Lake, Florida 32159

REVISION:	DATE:
1-9-15 TOWN COMMENTS	
2-20-15 FINAL SUBMITTAL	

Drawn: NSR
Checked: KRW
Date: 07-08-14
Scale: AS SHOWN
File No.: 14118

C:\Acad\Wicks\14118 Veranda Village\14118 Total.dwg, 2/21/2015 11:07:38 AM, DWG To PDF.pc3

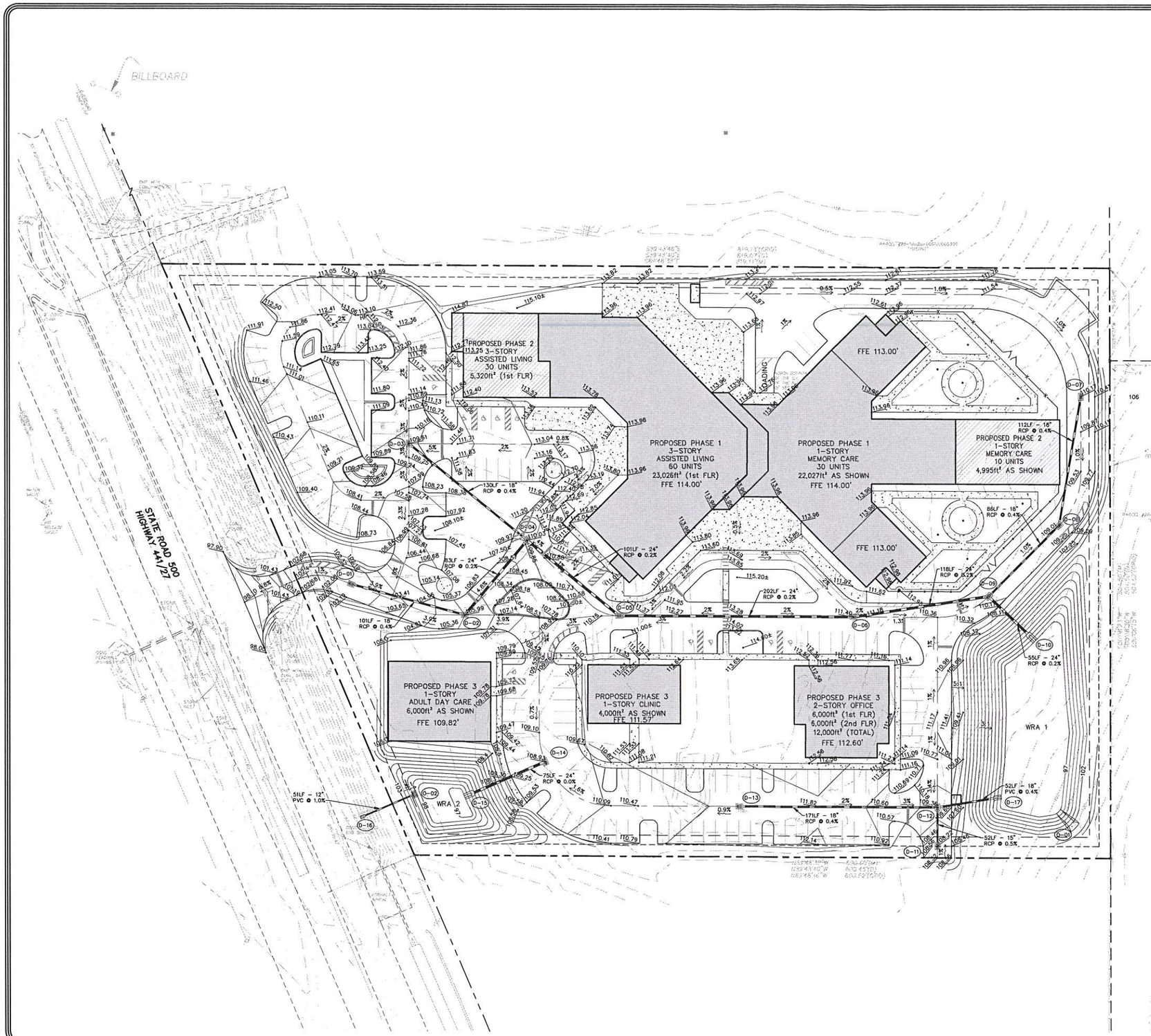

GRAPHIC SCALE
40 20 0 40 80
(IN FEET)

NORTH

LEGEND

- PROPERTY LINE
- ℄ PROPOSED ROAD
- 10' EASEMENT LINE
- 18' BUILDING SETBACK
- WALL
- CONCRETE PAVEMENT
- NEW BUILDING
- TYPE "C" INLET PER FDOT INDEX #232
- MITERED END SECTION PER FDOT INDEX #273
- MANHOLE PER FDOT INDEX #201

STORM STRUCTURE TABLE

D-01 TYPE "C" INLET TOP=102.00 SE. INV.=99.50 (18")	D-10 MITERED END SECTION INV.=97.00 (24")
D-02 TYPE "C" INLET TOP=105.99 NW. INV.=99.10 (18") NE. INV.=98.60 (24")	D-11 TYPE "C" INLET TOP=108.22 N. INV.=105.22 (15")
D-03 TYPE "C" INLET TOP=109.61 SE. INV.=106.10 (18")	D-12 TYPE "C" INLET TOP=109.36 W. INV.=104.86 (18") S. INV.=104.96 (15") NE. INV.=97.21 (18")
D-04 TYPE "C" INLET TOP=110.03 NW. INV.=105.58 (18") SW. INV.=98.43 (24") SE. INV.=98.33 (24")	D-13 TYPE "C" INLET TOP=111.25 E. INV.=105.54 (18")
D-05 TYPE "C" INLET TOP=110.61 NW. INV.=98.12 (24") E. INV.=98.02 (24")	D-14 MANHOLE TOP=108.93 SE. INV.=97.50 (18") SW. INV.=97.00 (24")
D-06 TYPE "C" INLET TOP=111.40 W. INV.=97.61 (24") NE. INV.=97.51 (24")	D-15 MITERED END SECTION INV.=97.00 (24")
D-07 TYPE "C" INLET TOP=110.17 SW. INV.=106.46 (18")	D-16 MITERED END SECTION INV.=96.00 (12")
D-08 TYPE "C" INLET TOP=109.01 NE. INV.=106.01 (18") SW. INV.=105.91 (18")	D-17 MITERED END SECTION INV.=97.00 (18")
D-09 TYPE "C" INLET TOP=109.87 NE. INV.=105.56 (18") SW. INV.=97.27 (24") SE. INV.=97.11 (24")	O-01 OUTFALL STRUCTURE WRA #1 CONCRETE WEIR OUTFALL=101.50 SEE DETAIL SHEET 12 O-02 OUTFALL STRUCTURE WRA #2 MODIFIED TYPE C INLET W/6" CONCRETE WEIR AND CAST IRON GRATE TOP=102.50 BOTTOM WEIR = 101.75 SW. INV.=96.51 (12") SEE DETAIL SHEET 12

KENNETH R. WICKS, P.E. FL. REG. NO. 33274
DATE: 2/23/15

KENNETH R. WICKS LICENSE No. 33274 STATE OF FLORIDA PROFESSIONAL ENGINEER

Wicks Engineering Services, Inc.
225 West Main Street, Tavares, Florida 32778
www.wicksengineering.com (352) 343-8667
C.A. #30062

Village Veranda at Lady Lake, LLC.
Elizabeth Mark
55 Se 2nd Avenue, Suite 301
Delray Beach, Florida 33444

Village Veranda at Lady Lake
Grading & Drainage Plan
Lady Lake, Florida 32159

REVISION:	DATE:
1-9-15 TOWN COMMENTS	
2-12-15 TOWN COMMENTS	
2-20-15 FINAL SUBMITTAL	

Drawn: NSR
Checked: KRW
Date: 07-08-14
Scale: AS SHOWN
File No.: 14118

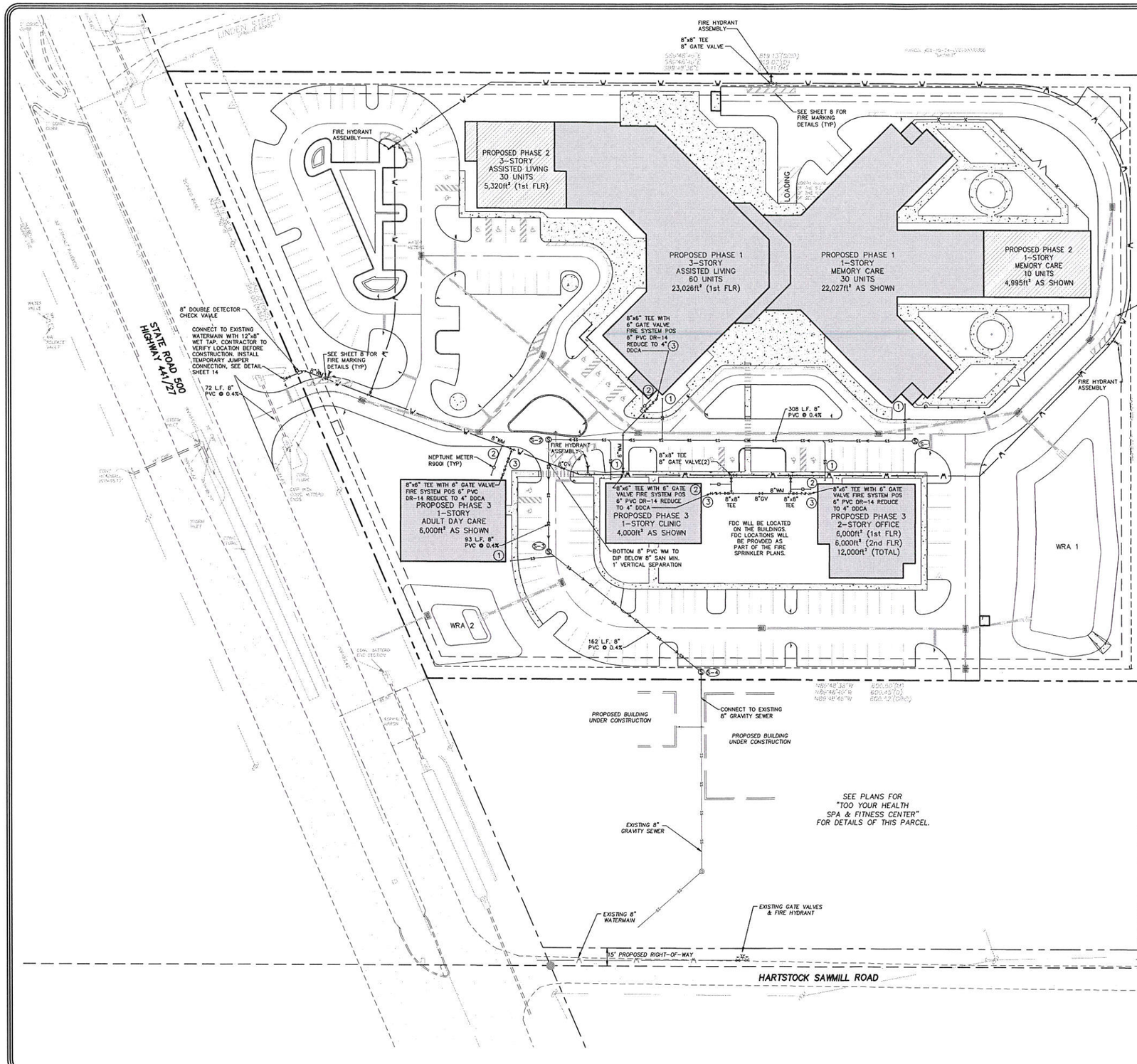

GRAPHIC SCALE
40 20 0 40 80
(IN FEET)

NORTH

LEGEND

- PROPERTY LINE
- ℄ PROPOSED ROAD
- NEW WATER LINE
- NEW SANITARY SYSTEM
- WALL
- CONCRETE PAVEMENT
- NEW BUILDING

NOTES

SEE LANDSCAPE PLAN FOR IRRIGATION WELL CONNECTION.

1. SANITARY CONNECTION REFER TO PLUMBING PLANS FOR CONTINUATION.
2. 1" WATER SERVICE, SEE DETAIL SHEET 14. REFER TO PLUMBING PLANS FOR CONTINUATION.
3. FIRE LINE CONNECTION REFER TO FIRE PROTECTION PLANS FOR CONTINUATION.

SANITARY STRUCTURE TABLE

S-1	SANITARY MANHOLE TOP EL 110.85 W. INV. 106.14
S-2	SANITARY MANHOLE TOP EL 108.60 E. INV. 104.90 S. INV. 104.80
S-3	SANITARY MANHOLE TOP EL 109.16 N. INV. 104.42 SE. INV. 104.32
S-4	SANITARY MANHOLE TOP EL 110.50 NW. INV. 103.68 S. INV. 103.58

KENNETH RANDAL WICKS
LICENSE
No. 33274
STATE OF
FLORIDA
PROFESSIONAL ENGINEER

KENNETH R. WICKS, P.E. FL. REG. NO. 33274
DATE: 2/23/15

Wicks Engineering Services, Inc.
225 West Main Street, Tavares, Florida 32778
www.wicksengineering.com (352) 343-8667
C.A. #30062

Village Veranda at Lady Lake, LLC.
Elizabeth Mark
55 Se 2nd Avenue, Suite 301
Delray Beach, Florida 33444

Village Veranda at Lady Lake
Utility Plan
Lady Lake, Florida 32159

REVISION:	DATE:
1-9-15 TOWN COMMENTS	
2-12-15 TOWN COMMENTS	
2-20-15 FINAL SUBMITTAL	

Drawn: NSR
Checked: KRW
Date: 07-08-14
Scale: AS SHOWN
File No.: 14118
Sheet: 10 of 16

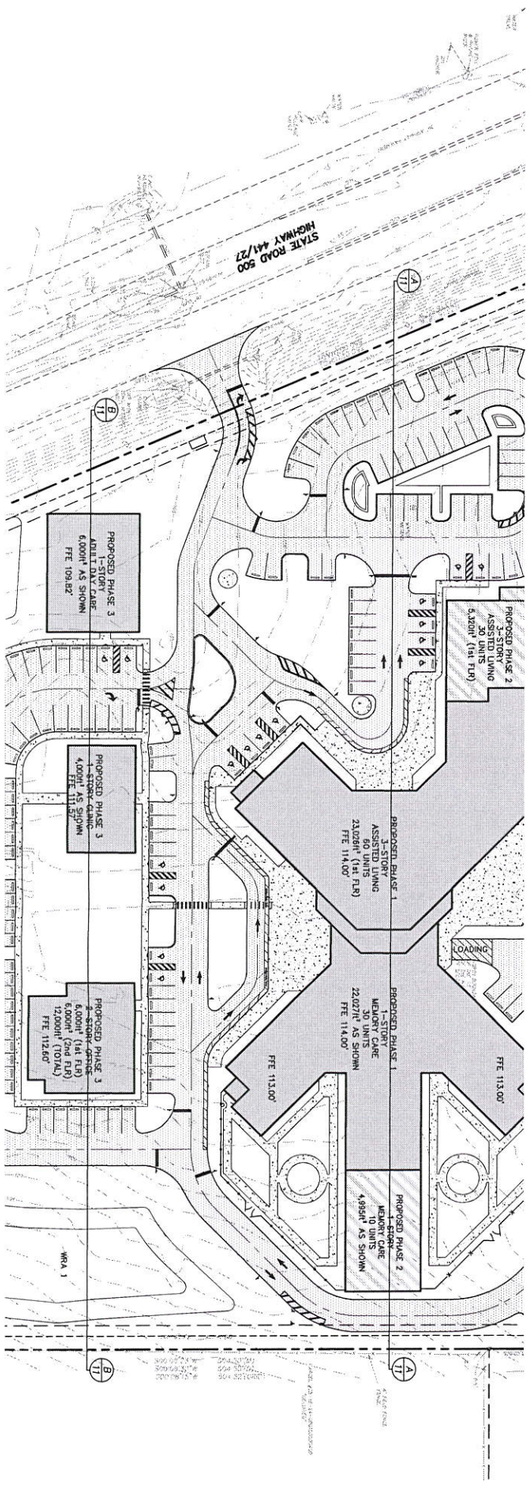

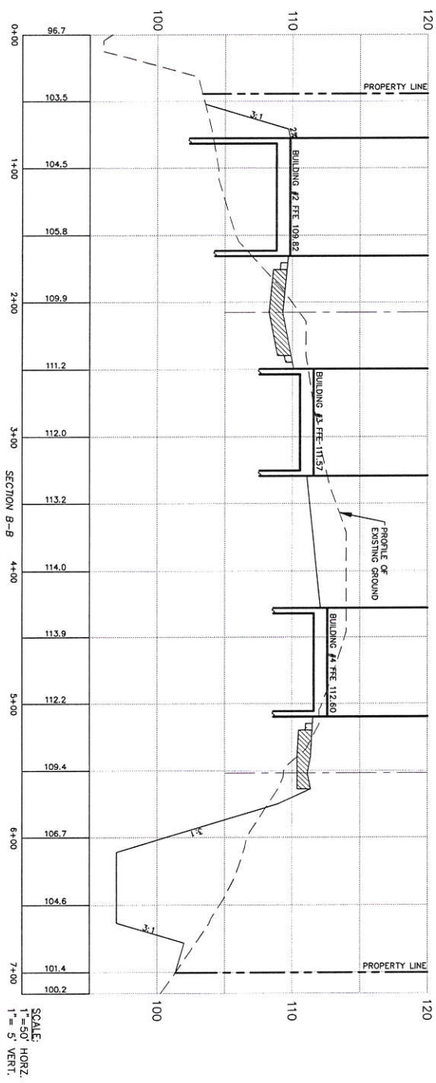

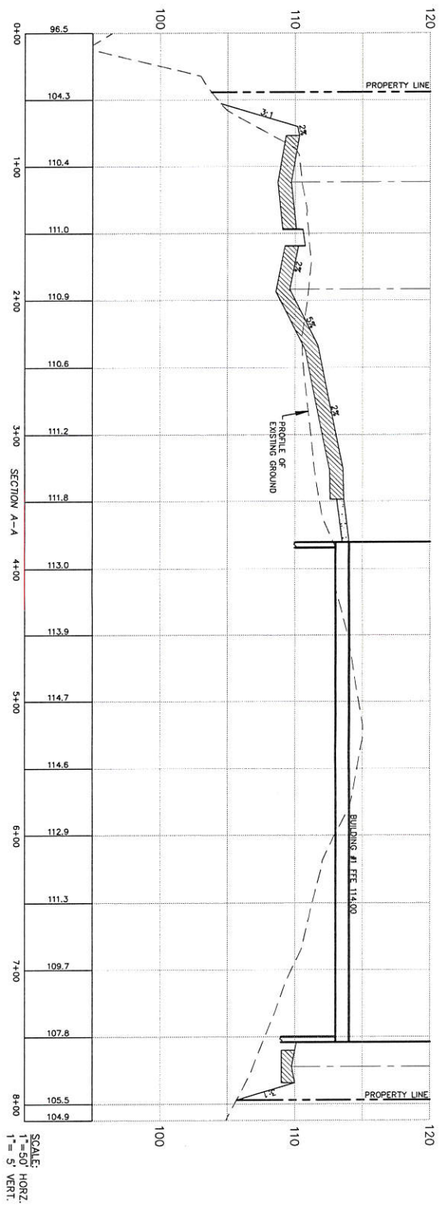

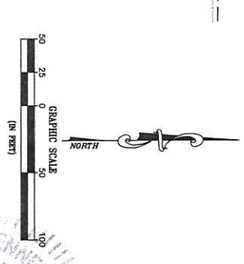

KENNETH R. WICKS, P.E. FL. REG. NO. 33274
DATE: 2/23/15

KENNETH RANDAL WICKS
LICENSE
No. 33274
STATE OF FLORIDA
PROFESSIONAL ENGINEER

Drawn: NSR	REVISION: DATE:
Checked: KRW	1-9-15 TOWN COMMENTS
Date: 07-08-14	2-20-15 FINAL SUBMITTAL
Scale: AS SHOWN	
File No.: 14118	

Sheet: 11 of 16

Village Veranda at Lady Lake Sections

Lady Lake, Florida 32159

Village Veranda at Lady Lake, LLC.
Elizabeth Mark
55 Se 2nd Avenue, Suite 301
Delray Beach, Florida 33444

Wicks Engineering Services, Inc.
225 West Main Street, Tavares, Florida 32778
www.wicksengineering.com (352) 343-8667
C.A. #30062

THE FOLLOWING LIST REPRESENTS A BASIC EROSION AND SEDIMENT CONTROL PROGRAM WHICH IS TO BE IMPLEMENTED TO HELP PREVENT OFF-SITE SEDIMENTATION DURING AND AFTER CONSTRUCTION OF THE PROJECT.

1. PERMANENT EROSION AND SEDIMENT CONTROL MEASURES SHALL BE INSTALLED AT THE EARLIEST PRACTICAL TIME CONSISTENT WITH GOOD CONSTRUCTION PRACTICES. ONE OF THE FIRST CONSTRUCTION ACTIVITIES SHOULD BE THE PLACEMENT OF PERMANENT AND TEMPORARY EROSION AND SEDIMENT CONTROL MEASURES AROUND THE PERIMETER OF THE PROJECT OR THE INITIAL WORK AREA TO PROTECT THE PROJECT, ADJACENT PROPERTIES AND WATER RESOURCES.
2. TEMPORARY EROSION AND SEDIMENT CONTROL MEASURES SHALL BE COORDINATED WITH PERMANENT MEASURES TO ASSURE ECONOMICAL, EFFECTIVE AND CONTINUOUS CONTROL THROUGHOUT THE CONSTRUCTION PHASE. TEMPORARY MEASURES SHALL NOT BE CONSTRUCTED FOR EXPEDIENCY IN LIEU OF PERMANENT MEASURES.
3. EROSION AND SEDIMENT CONTROL MEASURES SHALL BE ADEQUATELY MAINTAINED TO PERFORM THEIR INTENDED FUNCTION DURING CONSTRUCTION OF THE PROJECT.
4. NECESSARY REPAIRS TO BARRIERS OR REPLACEMENT OF BARRIERS SHALL BE ACCOMPLISHED PROMPTLY.
5. SEDIMENT DEPOSITS SHOULD BE REMOVED AFTER EACH RAINFALL. THEY MUST BE REMOVED WHEN THE LEVEL OF DEPOSITION REACHES APPROXIMATELY ONE-HALF THE HEIGHT OF THE BARRIER.
6. MATERIAL FROM SEDIMENT TRAPS SHALL NOT BE STOCKPILED OR DISPOSED OF IN A MANNER WHICH MAKES THEM READILY SUSCEPTIBLE TO BEING WASHED INTO ANY WATERCOURSE BY RUNOFF OR HIGH WATER.
7. ANY SEDIMENT DEPOSITS REMAINING IN PLACE AFTER THE BARRIERS ARE NO LONGER REQUIRED SHALL BE DRESSED TO CONFORM TO THE EXISTING GRADE, PREPARED AND SEEDED.

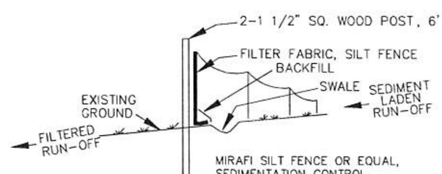

MIRAFI SILT FENCE OR EQUAL, SEDIMENTATION CONTROL
F.D.O.T. INDEX #102. FILTER FABRIC IN ACCORDANCE WITH SECTION 985 OF THE F.D.O.T. STANDARD SPECIFICATIONS.

NOTES:
1. TEMPORARY EROSION CONTROL STRUCTURE TO BE UTILIZED DURING CONSTRUCTION AT AREAS DESIGNATED BY ENGINEER OR AREAS ON-SITE WHERE UNSTABILIZED GRADES MAY CAUSE EROSION PROBLEMS. EROSION CONTROL STRUCTURE MAY BE REMOVED AFTER UPSLOPE AREA HAS BEEN STABILIZED BY SOD, OR COMPACTED AS DETERMINED BY CONTRACTOR.
2. CONSTRUCT STORMWATER SYSTEMS BEFORE ANY BUILDING OR ROAD CONSTRUCTION IS STARTED.

a.) PROTECT SYSTEM FROM SILTING AND DEBRIS BY METHODS PROVIDED IN DETAILS.

b.) PROTECT SWALE BOTTOM FROM SEALING BY EXCAVATING ALL SILT DEPOSITS DURING CONSTRUCTION. THIS SHALL BE DONE BEFORE SOD & SEEDING & MULCHING IS FINISHED

EROSION CONTROL STRUCTURE
N.T.S.

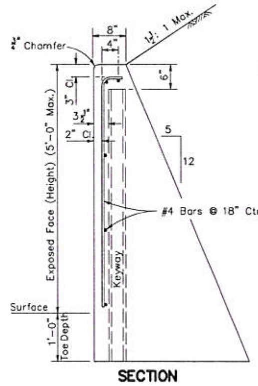

SECTION

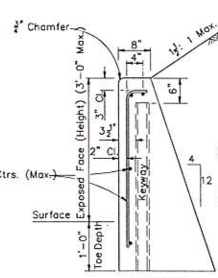

SECTION

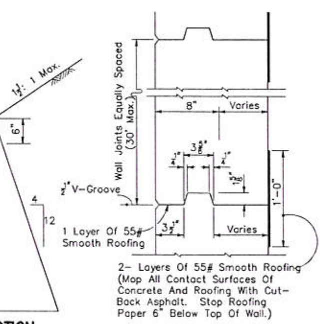

KEY DETAIL (TOP VIEW)

ESTIMATED QUANTITIES FOR WALL		
HEIGHT (EXPOSED FACED)	PER LINEAR FOOT OF WALL	
	CLASS ~ CONCRETE (CY)	STEEL (LB)
1'	0.07	3
2'	0.13	4
3'	0.20	5
4'	0.32	6
5'	0.43	7

GRAVITY WALL NOTES

1. Gravity walls constructed as extensions of reinforced concrete retaining walls, except walls of proprietary designs, shall have the same face texture and finish as the reinforced concrete retaining wall.
2. Cost of reinforcing steel and face texture and finish to be included in the contract unit price for Class ~ Concrete (Retaining Walls) CY.

GRAVITY WALL – FDOT INDEX #520
N.T.S.

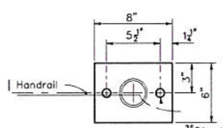

BASE PLATE

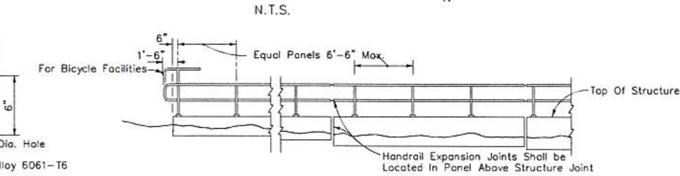

ELEVATION

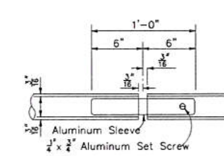

EXPANSION JOINT

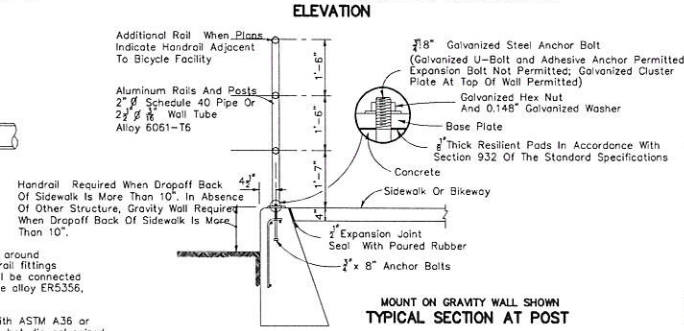

MOUNT ON GRAVITY WALL SHOWN
TYPICAL SECTION AT POST

PIPE HANDRAIL NOTES

1. All fixed joints to be either welded all around and ground smooth or standard pipe rail fittings at the contractors option. Posts shall be connected to base by weld only. Weld filler to be alloy ER5356, ER5556 or ER5183.
2. Anchor bolts shall be in accordance with ASTM A36 or A307. Nuts, washers, and bolts to be hot dip galvanized in conformance with ASTM A-153. After the nuts have been tightened, the anchor bolt threads shall be distorted or the nuts and bolts spot welded and coated with zinc compound.
3. Aluminum handrail shall be constructed in accordance with Section 515 of the Standard Specifications. Payment shall be full compensation for furnishing and installing handrail, including mounting hardware, and shall be paid for under the contract unit price for Pipe Handrail (Aluminum), L.F.

ALUMINUM PIPE HANDRAIL
N.T.S.

GENERAL NOTES FOR TYPE "C" INLETS

1. These inlets are suitable for bicycle and pedestrian areas and are to be used in ditches, medians and other areas subject to infrequent traffic loadings but are not to be placed in areas subject to any heavy wheel loads.
2. Inlets subject to minimal debris should be constructed without slots. Where debris is a problem inlets should be constructed with slots. Slotted inlets located within roadway clear zones and in areas accessible to pedestrians shall have traversable slots. The traversable slot modification is not adaptable to inlet Type H. Slots may be constructed at either or both ends as shown on plans.
3. Steel grates are to be used on all inlets where bicycle traffic is anticipated. Steel grates are to be used on all inlets with traversable slots. Either cast iron or steel grates may be used on inlets without slots where bicycle traffic is not anticipated. Either cast iron or steel grates may be used on all inlets with non-traversable slots. Subject to the selection described above, when Alternate G grate is specified in the plans, either the steel grate, hot dipped galvanized after fabrication, or the cast iron grate may be used, unless the plans stipulate the particular type.
4. Recommended maximum pipe sizes shown are for concrete pipe. Pipe sizes larger than those recommended must be checked for fit.
5. All exposed corners and edges of concrete are to be chamfered 3/4".
6. Pavement to be used on inlets without slots and inlets with non-traversable slots only when called for in the plans; but required on all traversable slot inlets. Cost to be included in contract unit price for inlets. Quantities shown are for information only.
7. Traversable slots constructed in existing inlets shall be paid for as inlets partial, and shall include the cost for slot openings, paving and any required replacement grates.
8. Sodding to be used on all inlets not located in paved areas and paid for under contract unit price for Sodding SY.
9. For supplementary details see Index No. 201.

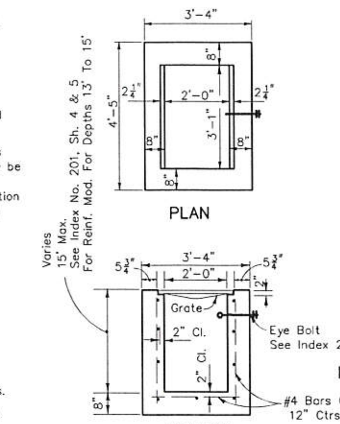

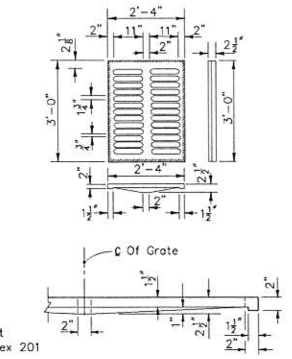

HALF SECTION CAST IRON GRATES
Approx. Weight 235 Lbs.

TYPE C INLET
Recommended Maximum Pipe Size:
2'-0" Wall-18" Pipe
3'-1" Wall-24" Pipe
N.T.S.

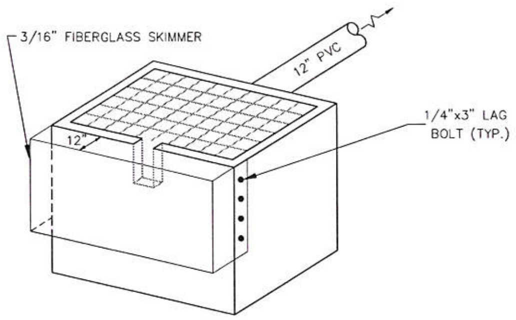

MODIFIED TYPE 'C' INLET WITH CAST IRON GRATE
TOP OF STRUCTURE – EL. 102.50
OUTFALL PIPE – INV. EL. 96.51
WEIR – EL. 101.75
WEIR SIZE – 6"x 9"
SKIMMER – TOP 102.50
– BOTTOM 101.25

OUTFALL STRUCTURE O-02
N.T.S.

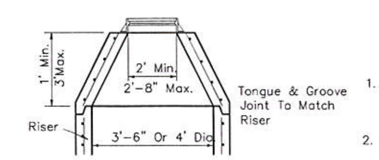

PRECAST CONCENTRIC CONE

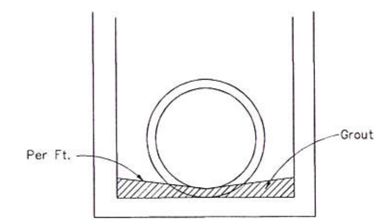

Note: Grout to consist of 3:1 Sand-Cement Mixture or any Class Concrete.
FOR ALL STRUCTURES UNLESS EXCLUDED BY SPECIAL DETAIL

DRAINAGE STRUCTURE INVERT

NOTES (TOPS)

1. Manhole top Type 7 slabs shall be of Class ~~ concrete. Concrete as specified in ASTM C-478 may be used for precast units; see General Note No. 3.
2. Manhole top Type 7 slabs may be of cast-in-place or precast construction. The optional key is for precast tops and in lieu of dowels. Frame and slab openings are to be omitted when top is used over a junction box. Frames can be adjusted with from one to six courses of brick.
3. Manhole top Type 8 may be of cast-in-place or precast concrete construction or brick construction. For concrete construction, the concrete and steel reinforcement shall be the same as the supporting wall unit. An eccentric cone may be used.
4. Manhole tops shall be secured to structures by optional construction joints as shown on Sheet 3 of 6.

TYPE 8 MANHOLES
N.T.S.

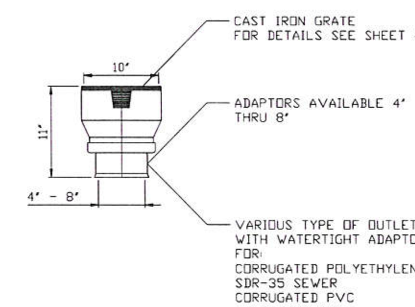

OUTFALL STRUCTURE O-01
N.T.S.

NOTES: FOR BEDDING AND TRENCHING

1. Dimension Bc = Pipe O.D.
Dimension Bd = Trench Width at Top of Pipe
Maximum Bd = Bc + 30"
Minimum Bd = Maximum Dimension of Bell + 8" (Unsheeted Trench)

2. DEPTH FOR REMOVAL FOR UNSUITABLE MATERIAL SHALL BE AS REQUIRED TO REACH SUITABLE FOUNDATION. FOR ROCK OR OTHER NON-CUSHIONING MATERIAL, DEPTH SHALL BE 6" BELOW BOTTOM OF UTILITY.

3. ALL BACKFILL AND SELECT MATERIAL UNDER ALL ROADWAYS, DRIVES (INCLUDING DIRT DRIVES), AND PARKING AREAS SHALL BE COMPACTED TO 98% OF THE MODI- FIELD PROCTOR MAXIMUM DRY DENSITY. (AASHTO T-180). BACKFILL AND SELECT MATERIAL UNDER ALL OTHER AREAS SHALL BE COMPACTED AS FOLLOWS: FROM BOTTOM OF TRENCH TO 12" ABOVE TOP OF PIPE – 95% OF MODIFIED PROCTOR MAXIMUM DRY DENSITY (AASHTO T-180). FROM 12" ABOVE TOP OF PIPE TO TOP OF BACKFILL – 90% OF MODIFIED PROCTOR MAXIMUM DRY DENSITY (AASHTO T-180)

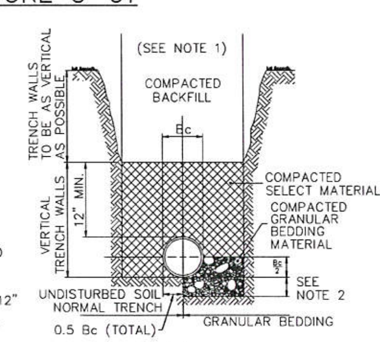

CLASS "B" BEDDING
NORMAL CONDITIONS

BEDDING DETAILS
N.T.S.

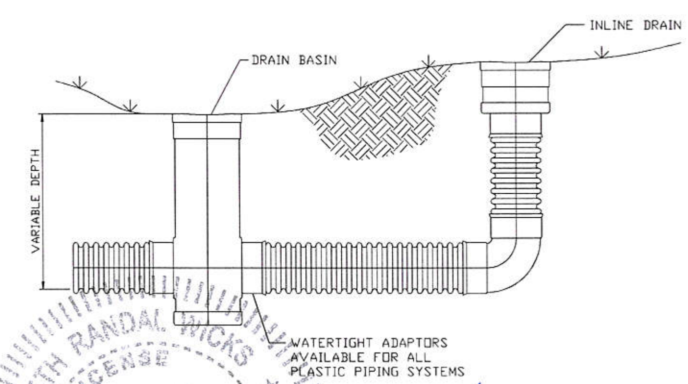

10" INLINE DRAIN
N.T.S.

KENNETH R. WICKS, P.E. FL. REG. NO. 33274
DATE: 2/23/15

KENNETH RANDAL WICKS LICENSE No. 33274 STATE OF FLORIDA PROFESSIONAL ENGINEER

Wicks Engineering Services, Inc.
225 West Main Street, Tavares, Florida 32778
www.wicksengineering.com (352) 343-8667
C.A. #30062

Village Veranda at Lady Lake, LLC.
Elizabeth Mark
55 Se 2nd Avenue, Suite 301
Delray Beach, Florida 33444

Village Veranda at Lady Lake
Civil Details
Lady Lake, Florida 32159

Drawn: NSR	REVISION: DATE:
Checked: KRW	1-9-15 TOWN COMMENTS
Date: 07-08-14	2-20-15 FINAL SUBMITTAL
Scale: AS SHOWN	
File No.: 14118	

Sheet: 12 of 16

C:\Acad\Wicks\14118 Veranda Village\14118 Total.dwg, 2/21/2015 11:11:02 AM, DWG To PDF.pc3

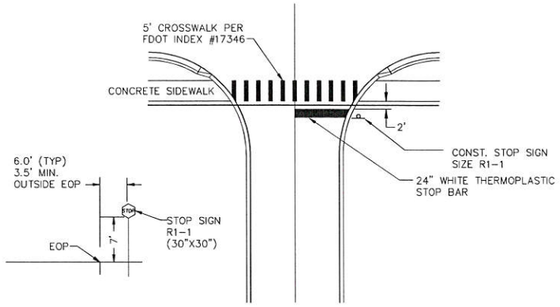

STOP SIGN, STOP BAR & CROSSWALK DETAIL

N.T.S.

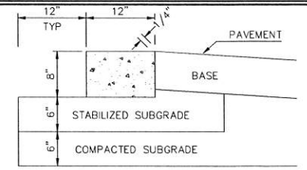

CONCRETE RIBBON CURB

N.T.S.

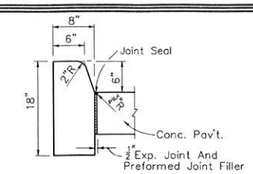

FDOT TYPE D CURB

N.T.S.

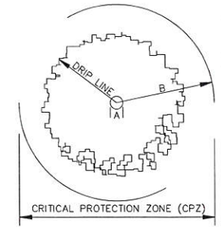

A = DIAMETER OF PROTECTED TREE IN INCHES MEASURED 4.5 FEET ABOVE GRADE.

B = CRITICAL PROTECTION ZONE (CPZ) RADIUS = AREA SURROUNDING A TREE WITHIN A CIRCLE DESCRIBED BY A RADIUS OF 1 FOOT FOR EACH INCH OF THE TREE'S DIAMETER "A" AS DESCRIBED ABOVE.

CRITICAL PROTECTION ZONE (CPZ)

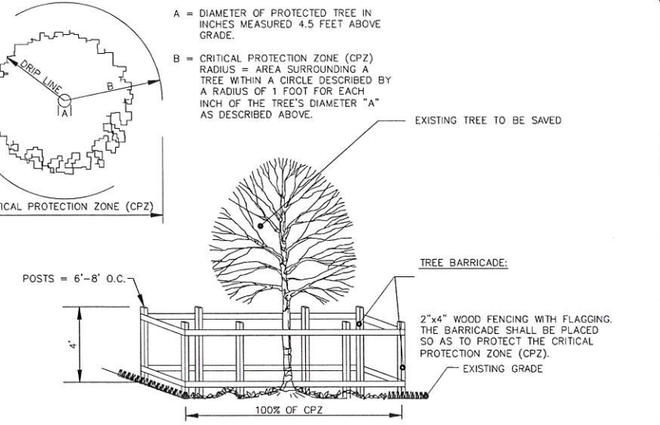

TYPICAL SECTION
TREE PROTECTION DETAIL

N.T.S.

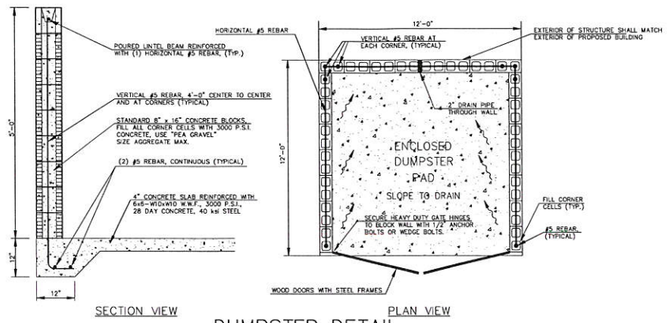

DUMPSTER DETAIL

N.T.S.

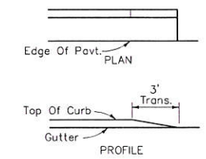

FDOT TYPE D CURB TRANSITION

N.T.S.

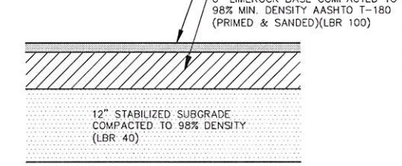

ASPHALT SECTION

N.T.S.

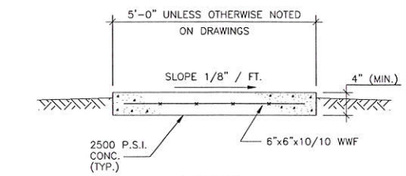

SECTION

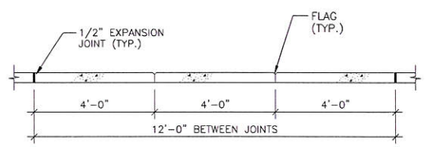

PROFILE

CONCRETE WALKWAY DETAIL

N.T.S.

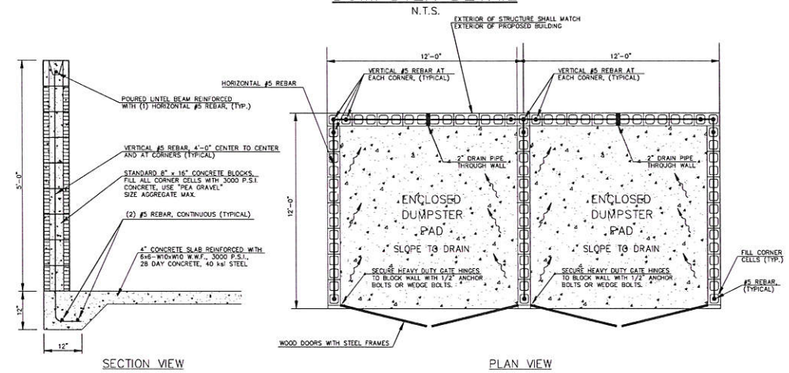

DOUBLE DUMPSTER DETAIL

N.T.S.

HANDICAP SIGN
FTP-25

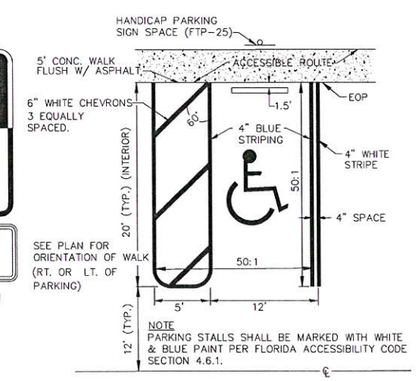

HANDICAP SPACE

N.T.S.

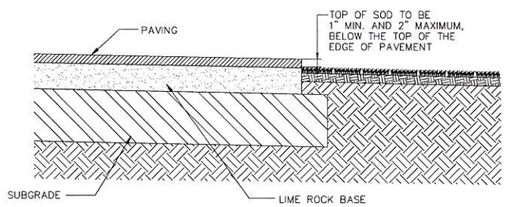

SOD PLANTING

N.T.S.

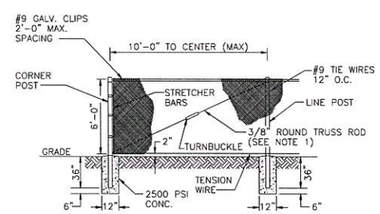

FENCE DETAIL

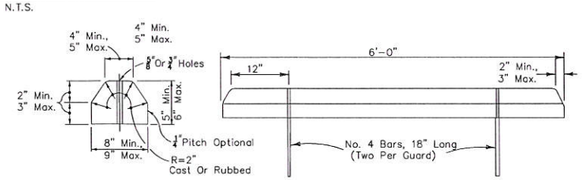

BUMPER GUARD SHALL BE PLACED 24" FROM FACE OF CURB

CONCRETE BUMPER GUARD "WHEEL STOP"

N.T.S.

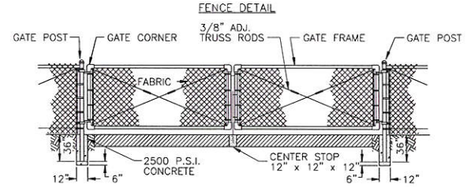

DOUBLE SWING GATE DETAIL

NOTES:
1. TRUSS BARS ARE REQUIRED FOR EACH GATE SECTION AND THE FIRST SPAN ON EACH SIDE OF A CORNER POST ONLY.

CHAIN LINK FENCE DETAIL

N.T.S.

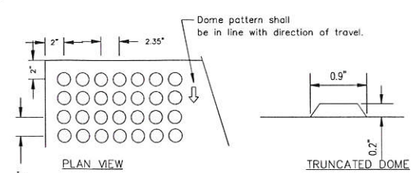

All sidewalk curb ramps shall have detectable warning surfaces that extend the full width of the ramp and in the direction of travel 24" (610 mm) from the back of curb.

CURB RAMP DETECTABLE WARNING

N.T.S.

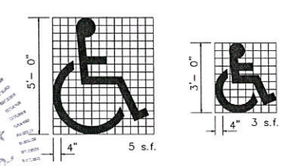

HANDICAPPED PAVEMENT SYMBOL

N.T.S.

USE OF PAVEMENT SYMBOL IN HANDICAPPED PARKING SPACES IS OPTIONAL, WHEN USED THE SYMBOL SHALL BE 3 OR 5 FT. HIGH AND WHITE IN COLOR.

KENNETH RANDAL WICKS LICENSE No. 33274 STATE OF FLORIDA PROFESSIONAL ENGINEER

KENNETH R. WICKS, P.E. FL. REG. NO. 33274
DATE: 2/23/15

Wicks Engineering Services, Inc.
225 West Main Street, Tavares, Florida 32778
www.wicksengineering.com (352) 343-8667
C.A. #30062

Village Veranda at Lady Lake, LLC.
Elizabeth Mark
55 Se 2nd Avenue, Suite 301
Delray Beach, Florida 33444

Village Veranda at Lady Lake
Civil Details
Lady Lake, Florida 32159

REVISION:	DATE:
1-9-15 TOWN COMMENTS	
2-20-15 FINAL SUBMITTAL	

Drawn: NSR
Checked: KRW
Date: 07-08-14
Scale: AS SHOWN
File No.: 14118
Sheet: 13 of 16

C:\Users\Wicks\14118 Verande Village\14118 Trend.dwg, 2/21/2015 11:11:22 AM, DWG To PDF.pc3

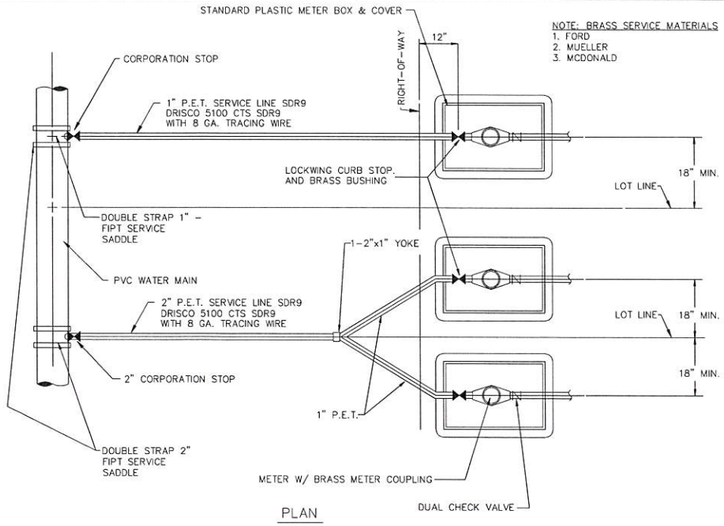

PLAN

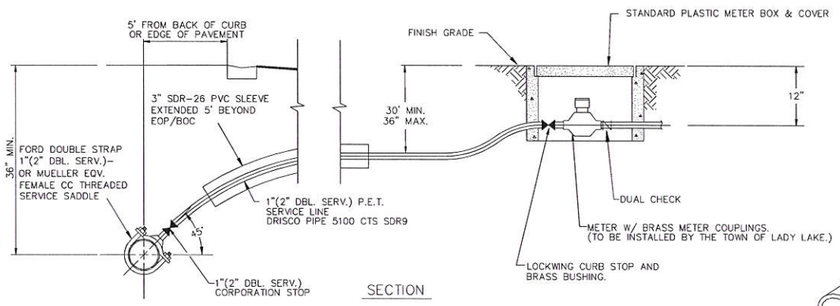

SECTION

WATER SERVICE CONNECTION DETAILS

(NOTE: METERS TO BE INSTALLED BY CITY OF TAVARES.)

N.T.S.

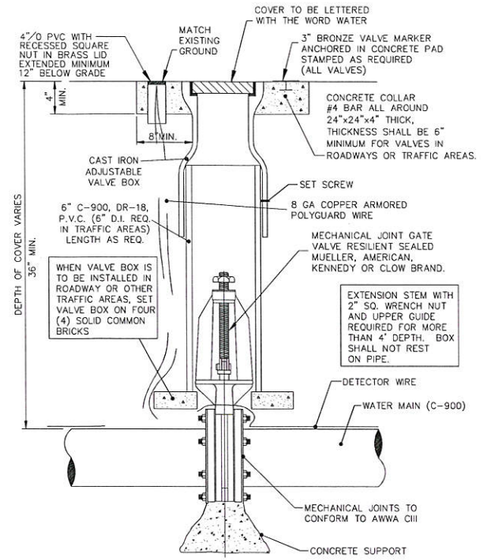

GATE VALVE & BOX

N.T.S.

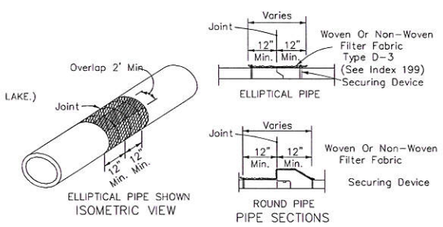

Cost of filter fabric jacket to be included in cost of pipe culverts.

FOR ALL PIPE TYPES – CONCRETE PIPE SHOWN

FILTER FABRIC JACKET

N.T.S.

GENERAL WATER NOTES

1. WATER SYSTEM SHALL BE INSTALLED IN STRICT ACCORDANCE WITH ALL LOCAL CODES AND REGULATIONS, CLEANED, DISINFECTED AND BACTERIOLOGICALLY CLEARED FOR SERVICE IN ACCORDANCE WITH THE LATEST AWWA STANDARDS AND CHAPTER 62-555 FLORIDA ADMINISTRATIVE CODE.
2. ALL PIPING SHALL BEAR THE "NSF" SEAL FOR POTABLE WATER.
3. WATER MAINS SHALL BE PVC CONFORMING TO AWWA C-900, DR 18 FOR PIPE SIZES 4"-12". PIPES 14" OR LARGER SHALL BE AWWA C-905, DR 18. ALL COUPLINGS COMPOUNDS, SOLVENTS, LUBRICANTS AND PIPE PREPARATION, FOR LAYING, SHALL BE IN ACCORDANCE WITH THE PIPE MANUFACTURERS LATEST RECOMMENDATIONS.
4. DEPTH OF WATER LINES TO BE MINIMUM 36" BELOW FINISHED GRADE.
5. WATER MAINS TO BE LOCATED 5' FROM BACK OF CURB OR EDGE OF PAVEMENT UNLESS OTHERWISE NOTED.
6. ALL PIPING CLEARANCES SHALL BE IN ACCORDANCE WITH CHAPTER 62-555.314, F.A.C., AND APPROVED BY THE CITY.
7. ALL WATER MAINS UNDER PAVEMENT SHALL BE DUCTILE IRON AND SHALL EXTEND 5' BEYOND THE BACK OF CURB, EXCEPT DIRECTIONAL BORES, WHICH SHALL BE SDR-11 HDPE.
8. ALL SLEEVES UNDER PAVEMENT SHALL EXTEND 5' BEYOND THE BACK OF CURB.

* * NOTE: MARK ALL POINTS WHERE WATER SERVICES CROSS CURB WITH A "W" MARK IN CONCRETE.

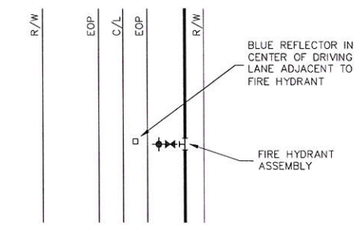

FIRE HYDRANT REFLECTOR DETAIL

N.T.S.

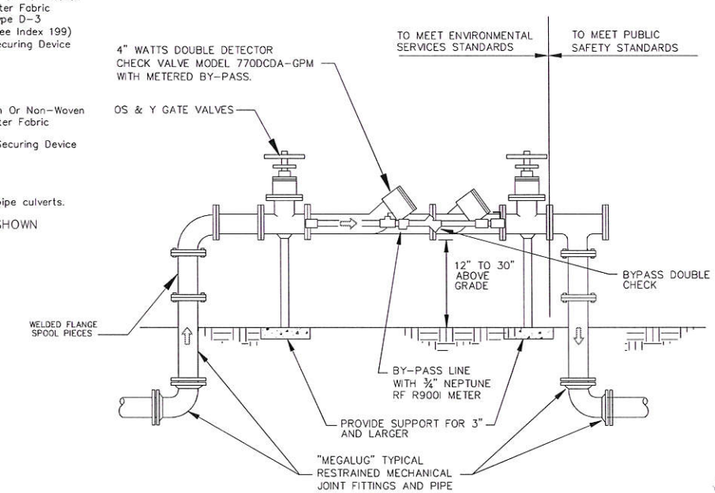

NOTES:

1. ALL PIPE AND FITTINGS ABOVE GRADE SHALL HAVE FLANGED ENDS.
2. BY-PASS METER ASSEMBLY NOT REQUIRED ON MONITORED FIRE SPRINKLER PROTECTION SYSTEMS.
3. THE CHECK VALVE ASSEMBLY, VALVES AND PIPING AND THE BYPASS METER AND DOUBLE CHECK SHALL BE PAINTED WITH A PRIMER SUITED TO THE BASE MATERIALS AND FINISHED WITH TWO COATS OF FOREST GREEN EXTERIOR ENAMEL.
4. BYPASS METER AND BACKFLOW PREVENTER SHALL BE ASSEMBLED WITH APPROPRIATE FITTINGS TO ALLOW REMOVAL AND RE-INSTALLATION.
5. INSTALL DOLE EATON FP-45 FREEZE PROTECTION VALVE WITH 1/2" BRASS NIPPLE ON REMOVABLE TEST PLUG ON SUPPLY SIDE OS&Y VALVE.

DOUBLE DETECTOR CHECK ASSEMBLY WITH FIRE DEPT. CONNECTION

N.T.S.

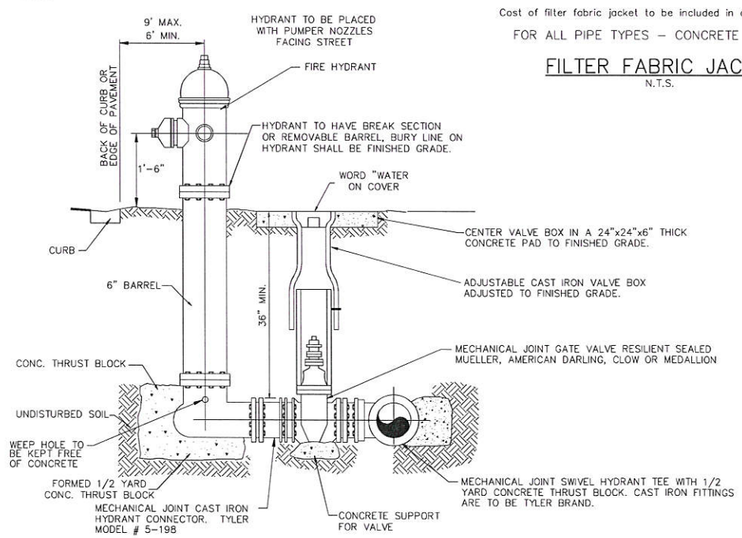

SPECIFICATIONS

1. AWWA SPECIFICATIONS C-502
2. TWO 2-1/2" HOSE NOZZLE DISCHARGE
3. ONE 4-1/2" PUMPER NOZZLE DISCHARGE
4. ONE 1-1/2" OPERATING NUT, LEFT

APPLY TWO COATS OF SHERWIN WILLIAMS OSHA SAFETY INDUSTRIAL YELLOW PAINT TO HYDRANT BARREL.
APPLY TWO COATS OF SHERWIN WILLIAMS OSHA SAFETY INDUSTRIAL ENAMEL PAINT TO THE BONNET AND NOZZLE CAPS. THE UTILITY DEPARTMENT INSPECTOR WILL DETERMINE THE COLOR TO PAINT THE HYDRANT BONNET AND NOZZLE CAPS BY FLOW TESTING HYDRANT.

BLUE	1500 GPM OR MORE (SHERWIN WILLIAMS #SW4086)
GREEN	1000 GPM TO 1499 GPM (SHERWIN WILLIAMS #B54614)
ORANGE	500 GPM TO 999 GPM (SHERWIN WILLIAMS #B54E39)
RED	499 GPM OR LESS (SHERWIN WILLIAMS #B54R38)
YELLOW	HYDRANT BARREL (SHERWIN WILLIAMS #B54Y37)

5. HYDRANTS SHALL BE FLOW TESTED BY CONTRACTOR. COORDINATE WITH CITY ENGINEER FOR TESTING PROCEDURES.
6. ALL HYDRANTS SHALL BE EQUIPPED WITH GRADE-LOK FITTINGS TO ALLOW FOR ELEVATION ADJUSTMENTS.
7. ALL HYDRANTS SHALL BE :
   a. MUELLER CENTURION
   b. AMERICAN DARLING 5 1/4"" B-84-B

FIRE HYDRANT WITH VALVE

(STANDARD FIRE HYDRANT ASSEMBLY)

N.T.S.

KENNETH RANDAL WICKS LICENSE No. 33274 STATE OF FLORIDA PROFESSIONAL ENGINEER

KENNETH R. WICKS, P.E. FL. REG. NO. 33274
DATE: 2/23/15

Wicks Engineering Services, Inc.
225 West Main Street, Tavares, Florida 32778
www.wicksengineering.com (352) 343-8667
C.A. #30062

Village Veranda at Lady Lake, LLC.
Elizabeth Mark
55 Se 2nd Avenue, Suite 301
Delray Beach, Florida 33444

Village Veranda at Lady Lake
Civil Details
Lady Lake, Florida 32159

REVISION	DATE
1-9-15 TOWN COMMENTS	
2-20-15 FINAL SUBMITTAL	

Drawn: NSR
Checked: KRW
Date: 07-08-14
Scale: AS SHOWN
File No.: 14118

Sheet: 14 of 16

FDEP SEPARATION REQUIREMENTS
under 62-555.314 Effective 8-28-2003

HAZARD	HORIZONTAL SEPARATION	VERTICAL SEPARATION	
		WATER ABOVE	WATER BELOW
STORM SEWER	3FT MIN	12"PREF, 6"MIN	12" MIN
STORM FORCE MAIN	3FT MIN	12" MIN	12" MIN
RECLAIMED WATER (REQ'D UNDER 62-610)	3FT MIN	12" MIN	12" MIN
RECLAIMED WATER (NOT UNDER 62-610)	10FT PREF, 6FT MIN	12" MIN	12" MIN
VACUUM SANITARY SEWER	10FT PREF, 3FT MIN	12" PREF, 6" MIN	12" MIN
GRAVITY SANITARY SEWER	10FT PREF, 6FT MIN*	12" PREF, 6" MIN	12" MIN
SANITARY SEWER FORCE MAIN	10FT PREF, 6FT MIN	12" MIN	12" MIN
ON-SITE SEWAGE TREATMENT & DISPOSAL SYSTEM 10FT MIN (NO ALTERNATIVES)			

* 3FT MINIMUM IF BOTTOM OF WATER MAIN IS 6" ABOVE THE GRAVITY SEWER MAIN
- THESE TABLES ARE NOT COMPREHENSIVE AND ARE NOT A SUBSTITUTE FOR THE TEXT IN 62-555.314. (SEE TEXT BELOW)
- THIS TABLE WAS CREATED BY A PRIVATE INDIVIDUAL AND IS NOT AN OFFICIAL FDEP TABLE.
- ALL DISTANCES ARE MEASURED OUTSIDE TO OUTSIDE.
- IT IS PREFERABLE TO LAY THE WATER PIPE ABOVE THE HAZARD PIPE.
- WATER MAINS CANNOT COME INTO CONTACT WITH ANY HAZARD STRUCTURES WITHOUT PRIOR APPROVAL BY FDEP.
- EXCEPTIONS ARE ONLY ALLOWED ON A CASE-BY-CASE BASIS WITH JUSTIFICATION TO FDEP BEFORE INSTALLATION.

"AT CROSSINGS, CENTER WATER PIPE ON CROSSING OR MAINTAIN THE FOLLOWING JOINT SPACING:"

HAZARD	ALTERNATIVE JOINT SPACING
STORM SEWER	3FT MIN
STORM FORCE MAIN	3FT MIN
RECLAIMED WATER (REQ'D UNDER 62-610)	3FT MIN
RECLAIMED WATER (NOT UNDER 62-610)	6FT MIN
VACUUM SANITARY SEWER	3FT MIN
GRAVITY SANITARY SEWER	6FT MIN
SANITARY SEWER FORCE MAIN	6FT MIN
ON-SITE SEWAGE TREATMENT & DISPOSAL SYSTEM N/A	

62-555.314 LOCATION OF PUBLIC WATER SYSTEM MAINS TEXT.

For the purpose of this section, the phrase water mains shall mean mains, including treatment plant process piping, conveying either raw, partially treated, or finished drinking water; fire hydrant leads; and service lines that are under the control of a public water system and that have an inside diameter of three inches or greater.

(1) Horizontal Separation Between Underground Water Mains and Sanitary or Storm Sewers, Wastewater or Stormwater Force Mains, Reclaimed Water Pipelines, and On-Site Sewage Treatment and Disposal Systems.

(a) New or relocated, underground water mains shall be laid to provide a horizontal distance of at least three feet between the outside of the water main and the outside of any existing or proposed storm sewer, stormwater force main, or pipeline conveying reclaimed water regulated under Part III of Chapter 62-610, F.A.C.

(b) New or relocated, underground water mains shall be laid to provide a horizontal distance of at least three feet, and preferably ten feet, between the outside of the water main and the outside of any existing or proposed vacuum-type sanitary sewer.

(c) New or relocated, underground water mains shall be laid to provide a horizontal distance of at least six feet, and preferably ten feet, between the outside of the water main and the outside of any existing or proposed gravity-or pressure-type sanitary sewer, wastewater force main, or pipeline conveying reclaimed water not regulated under Part III of Chapter 62-610, F.A.C. The minimum horizontal separation distance between water mains and gravity-type sanitary sewers shall be reduced to three feet where the bottom of the water main is laid at least six inches above the top of the sewer.

(d) New or relocated, underground water mains shall be laid to provide a horizontal distance of at least ten feet between the outside of the water main and all parts of any existing or proposed on-site sewage treatment and disposal system as defined in Section 381.0065(2), F.S., and Rule 64E-6.002, F.A.C.

(2) Vertical Separation Between Underground Water Mains and Sanitary or Storm Sewers, Wastewater or Stormwater Force Mains, and Reclaimed Water Pipelines.

(a) New or relocated, underground water mains crossing any existing or proposed gravity-or vacuum-type sanitary sewer or storm sewer shall be laid so the outside of the water main is at least six inches, and preferably 12 inches, above or at least 12 inches below the outside of the other pipeline. However, it is preferable to lay the water main above the other pipeline.

(b) New or relocated, underground water mains crossing any existing or proposed pressure-type sanitary sewer, wastewater or stormwater force main, or pipeline conveying reclaimed water shall be laid so the outside of the water main is at least 12 inches above or below the outside of the other pipeline. However, it is preferable to lay the water main above the other pipeline.

(c) At the utility crossings described in paragraphs (a) and (b) above, one full length of water main pipe shall be centered above or below the other pipeline so the water main joints will be as far as possible from the other pipeline. Alternatively, at such crossings, the pipes shall be arranged so that all water main joints are at least three feet from all joints in vacuum-type sanitary sewers, storm sewers, stormwater force mains, or pipelines conveying reclaimed water regulated under Part III of Chapter 62-610, F.A.C., and at least six feet from all joints in gravity- or pressure-type sanitary sewers, wastewater force mains, or pipelines conveying reclaimed water not regulated under Part III of Chapter 62-610, F.A.C.

(3) Separation Between Water Mains and Sanitary or Storm Sewer Manholes.

(a) No water main shall pass through, or come into contact with, any part of a sanitary sewer manhole.

(b) Effective August 28, 2003, water mains shall not be constructed or altered to pass through, or come into contact with, any part of a storm sewer manhole or inlet structure. Where it is not technically feasible or economically sensible to comply with this requirement (i.e., where there is a conflict in the routing of a water main and a storm sewer and where alternative routing of the water main or the storm sewer is not technically feasible or is not economically sensible), the Department shall allow exceptions to this requirement (i.e, the Department shall allow construction of conflict manholes), but suppliers of water or persons proposing to construct conflict manholes must first obtain a specific permit from the Department in accordance with Part V of this chapter and must provide in the preliminary design report or drawings, specifications, and design data accompanying their permit application the following information:

1. Technical or economic justification for each conflict manhole.
2. A statement identifying the party responsible for maintaining each conflict manhole.
3. Assurance of compliance with the design and construction requirements in sub-subparagraphs a. through d. below.

a. Each water main passing through a conflict manhole shall have a flexible, watertight joint on each side of the manhole to accommodate differential settling between the main and the manhole.

b. Within each conflict manhole, the water main passing through the manhole shall be installed in a watertight casing pipe having high impact strength (i.e., having an impact strength at least equal to that of 0.25-inch-thick ductile iron pipe).

c. Each conflict manhole shall have an access opening, and shall be sized, to allow for easy cleaning of the manhole.

d. Gratings shall be installed at all storm sewer inlets upstream of each conflict manhole to prevent large objects from entering the manhole.

(4) Separation Between Fire Hydrant Drains and Sanitary or Storm Sewers, Wastewater or Stormwater Force Mains, Reclaimed Water Pipelines, and On-Site Sewage Treatment and Disposal Systems. New or relocated fire hydrants with underground drains shall be located so that the drains are at least three feet from any existing or proposed storm sewer, stormwater force main, or pipeline conveying reclaimed water regulated under Part III of Chapter 62-610, F.A.C.; at least three feet, and preferably ten feet, from any existing or proposed vacuum-type sanitary sewer; at least sex feet, and preferably ten feet, from any existing or proposed gravity- or pressure-type sanitary sewer, wastewater force main, or pipeline conveying reclaimed water not regulated under Part III of Chapter 62-610, F.A.C., and at least ten feet from any existing or proposed on-site sewage treatment and disposal system as defined in Section 381.0065(2), F.S., and Rule 64E-6.00s, F.A.C.

(UPDATED 6-15-04)

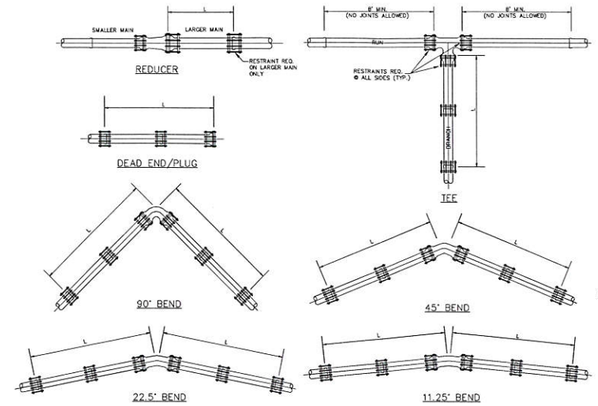

TABLE OF THRUST RESTRAINT LENGTHS

PIPE SIZE (inches)	90° BEND		45° BEND		22 1/2° BEND		11 1/4° BEND		TEES		DEAD END & PLUG		REDUCER			
	P.V.C. (L)	DUCTILE IRON (L)	P.V.C. (L)	DUCTILE IRON (L)	P.V.C. (L)	DUCTILE IRON (L)	P.V.C. (L)	DUCTILE IRON (L)	P.V.C. (L)	DUCTILE IRON (L)	P.V.C. (L)	DUCTILE IRON (L)	PIPE SIZES	P.V.C. (L)	DUCTILE IRON (L)
4	20'	16'	8'	7'	4'	3'	2'	2'	15'	10'	45'	29'	6"x4"	33'	21'
6	28'	22'	12'	9'	6'	4'	3'	2'	33'	21'	63'	40'	8"x6"	34'	22'
8	36'	29'	15'	12'	7'	6'	4'	3'	52'	33'	82'	52'	10"x8"	33'	21'
10	43'	34'	18'	14'	9'	7'	4'	3'	68'	43'	98'	63'	12"x10"	34'	22'
12	50'	40'	21'	17'	10'	8'	5'	4'	84'	54'	116'	74'	16"x12"	63'	40'
16	63'	51'	26'	21'	13'	10'	6'	5'	116'	74'	148'	94'	18"x16"	33'	21'
18	70'	56'	29'	23'	14'	11'	7'	6'	131'	83'	163'	103'	20"x18"	33'	21'
20	75'	61'	31'	25'	15'	12'	7'	6'	145'	92'	178'	113'	20"x20"	62'	39'
24	86'	70'	36'	29'	17'	14'	9'	7'	173'	110'	207'	132'			

THRUST RESTRAINT DESIGN NOTES

1. RESTRAINT JOINTS, FITTINGS, & VALVE REQUIREMENTS CALCULATED BY THE THRUST RESTRAINT DESIGN PROGRAM PROVIDED BY UNI-FLANGE, THE FORD METER BOX COMPANY, INC.
2. DATA BASED ON MAX. PRESSURE OF 150 p.s.i., THE UNIFIED SOILS CLASSIFICATION SYSTEM (SOIL TYPE SP), THE PIPE BEDDED IN NATIVE SOIL w/ A MINIMUM OF 2.5' COMPACTED FILL OVER THE PIPE, AND USING A SAFETY FACTOR OF 1.5 FOR THE DATA.
3. ALL FITTINGS & VALVES SHALL HAVE RESTRAINED JOINTS PER SPECIFICATIONS & ALL BELL & SPIGOT JOINTS TO BE RESTRAINED WITH A RESTRAINING HARNESS WITHIN THE REQUIRED LENGTH OF RESTRAINED PIPE (L).
4. THRUST BLOCKS SHALL BE USED ONLY AS SPECIFIED BY PROJECT ENGINEER.

THRUST RESTRAINT DETAILS
N.T.S.

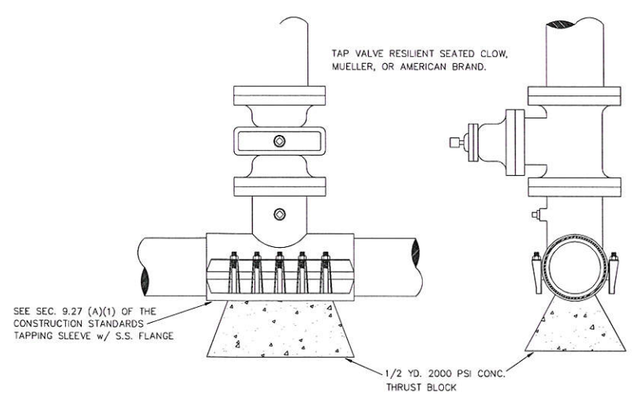

WET TAP SLEEVE & TAP VALVE
N.T.S.

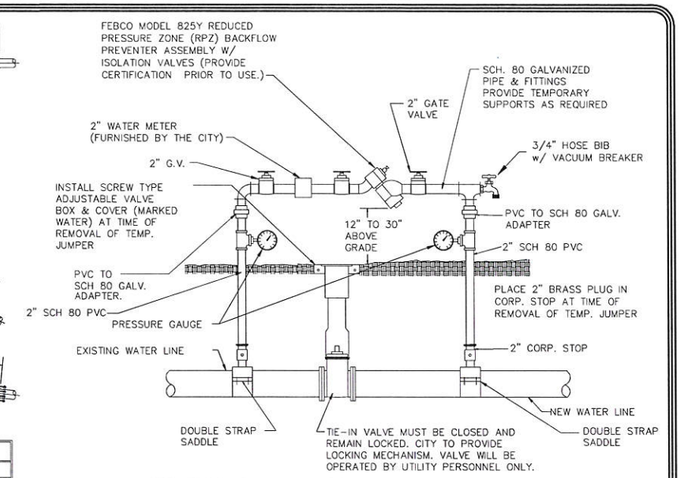

TEMPORARY JUMPER CONNECTION DETAIL
N.T.S.

NOTE: LOCATION TO BE DETERMINED AT TIME OF PRECONSTRUCTION CONFERENCE W/ CITY.

- MAINS LARGER THAN 8" WILL REQUIRE 3" PIPING, 3" VALVES AND 3" RPZ

TEMPORARY JUMPER CONNECTION NOTES

1. A TEMPORARY JUMPER CONNECTION IS REQUIRED AT ALL CONNECTIONS BETWEEN EXISTING ACTIVE WATER MAINS AND PROPOSED NEW WATER MAIN IMPROVEMENTS.
2. THE DETAILS TO BE USED FOR FILLING ANY WATER MAIN OF ANY SIZE FROM EXISTING ACTIVE WATER MAINS AND FOR FLUSHING OF NEW MAINS UP TO 8" DIAMETER (2.5 FPS MINIMUM VELOCITY) AND FOR PULLING BACTERIOLOGICAL SAMPLES FROM ANY NEW WATER MAIN OF ANY SIZE. THE JUMPER CONNECTION SHALL BE MAINTAINED UNTIL AFTER FILLING, FLUSHING, TESTING AND DISINFECTION OF THE NEW MAIN HAS BEEN SUCCESSFULLY COMPLETED AND CLEARANCE FOR USE FROM THE FLORIDA DEPARTMENT OF ENVIRONMENTAL PROTECTION (FDEP) AND OTHER PERTINENT AGENCIES HAS BEEN RECEIVED. THE JUMPER CONNECTION SHALL ALSO BE USED TO MAINTAIN A MINIMUM PRESSURE OF 20 psi IN THE NEW MAINS ALL THE TIME AFTER DISINFECTION AND UNTIL THE FDEP CLEARANCE LETTER IS OBTAINED. ADEQUATE THRUST BLOCKING AND/OR RESTRAINTS SHALL BE PROVIDED TEMPORARILY, AS REQUIRED. PIPE AND FITTINGS USED FOR CONNECTING THE NEW PIPE TO THE EXISTING PIPE SHALL BE DISINFECTED PRIOR TO INSTALLATION IN ACCORDANCE WITH AWWA C651, 1992 EDITION. THIS TAPPING SLEEVE AND THE EXTERIOR OF THE MAIN TO BE TAPPED SHALL BE DISINFECTED BY SPRAYING OR SWABBING PER SECTION II OF AWWA C561-92.
3. FLUSHING OF 10" DIAMETER AND LARGE WATER MAINS MAY BE DONE THROUGH THE TIE-IN VALVE, IN THE PRESENCE OF THE UTILITY DEPART. THE UTILITY DEPARTMENT WILL NOTIFIED IN WRITING 48 HOURS PRIOR TO THE FLUSHING OF SAID MAINS.

   THE FOLLOWING PROCEDURES SHALL BE FOLLOWED:

   A. THE TIE-IN VALVES SHALL BE OPERATED AND PRESSURE TESTED IN THE PRESENCE OF THE UTILITY COMPANY AND ENGINEER TO VERIFY WATER TIGHTNESS PRIOR TO THE TIE-IN. VALVES WHICH ARE NOT WATERTIGHT SHALL BE REPLACED OR A NEW VALVE INSTALLED IMMEDIATELY ADJACENT TO THE LEAKING VALVE.
   B. THE TEMPORARY JUMPER CONNECTION SHALL BE CONSTRUCTED AS DETAILED. THE JUMPER CONNECTION SHALL BE USED TO FILL THE NEW WATER MAIN AND FOR PROVIDING WATER FOR BACTERIOLOGICAL SAMPLING OF THE NEW MAIN AS REQUIRED BY THE FDEP PERMIT.
      - FLUSHING SHALL NOT BE ATTEMPTED DURING PEAK DEMAND HOURS OF THE EXISTING WATER MAIN.
      - ALL DOWNSTREAM VALVES IN THE NEW SYSTEM MUST BE OPEN PRIOR TO OPENING THE TIE-IN VALVE.
      - PROVIDE FOR AND MONITOR THE PRESSURE AT THE TIE-IN POINT, THE PRESSURE IN THE EXISTING MAIN MUST NOT DROP BELOW 35 psi.
      - TIE-IN VALVE SHALL BE OPENED A FEW TURNS ONLY, ENSURING A PRESSURE DROP ACROSS THE VALVE IS ALWAYS GRATER THAN 10 psi.
   C. THE TIE-IN VALVE SHALL BE LOCKED CLOSED BY THE CITY UNTIL FLUSHING BEGINS.
   D. THE TIE-IN VALVE SHALL BE OPENED ONLY A FEW TURNS FOR FLUSHING OF THE NEW MAIN. THE PROCEDURE SHALL BE DIRECTED BY THE CITY AND OBSERVED BY THE ENGINEER.
   E. AFTER FLUSHING, THE TIE-IN VALVE SHALL BE CLOSED AND LOCKED IN THE CLOSED POSITION BY THE CITY.
4. THE CONTRACTOR SHALL PROVIDE DOCUMENTATION DEMONSTRATING THAT THE RPZ BACKFLOW PREVENTION DEVICE HAS BEEN TESTED WITHIN ONE YEAR AT THE TIME OF INSTALLATION AND IS IN GOOD WORKING ORDER AT THE TIME OF INSTALLATION. THE TEST SHALL BE PERFORMED BY A QUALIFIED BACKFLOW PREVENTION TECHNICIAN.
5. EXCEPT AS REQUIRED TO FLUSH LINES OF GREATER THAN 8" IN DIAMETER, THE TIE-IN VALVE SHALL REMAIN CLOSED AND SHALL BE LOCKED IN THE CLOSED POSITION BY THE CITY. THE TIE-IN VALVE SHALL REMAIN LOCKED CLOSED UNTIL THE NEW SYSTEM HAS BEEN CLEARED FOR USE BY FDEP AND ALL OTHER PERTINENT AGENCIES.
6. UPON RECEIPT OF CLEARANCE FOR USE FROM FDEP AND ALL OTHER PERTINENT AGENCIES, THE CONTRACTOR SHALL REMOVE THE JUMPER CONNECTION. THE CORPORATION STOPS ARE TO BE CLOSED AND PLUGGED WITH 2" BRASS PLUGS.
7. ALL INSTALLATION AND MAINTENANCE OF THE TEMPORARY JUMPER CONNECTION AND ASSOCIATED BACKFLOW PREVENTION DEVICE FITTINGS, VALVE, ETC., SHALL BE THE RESPONSIBILITY OF THE CONTRACTOR.

KENNETH R. WICKS, P.E. FL. REG. NO. 33274
DATE: 2/23/15

KENNETH R. WICKS LICENSED PROFESSIONAL ENGINEER No. 33274 STATE OF FLORIDA

Wicks Engineering Services, Inc.
225 West Main Street, Tavares, Florida 32778
www.wicksengineering.com (352) 343-8667
C.A. #30062

Village Veranda at Lady Lake, LLC.
Elizabeth Mark
55 Se 2nd Avenue, Suite 301
Delray Beach, Florida 33444

Village Veranda at Lady Lake
Civil Details
Lady Lake, Florida 32159

REVISION:	DATE:
1-9-15 TOWN COMMENTS	
2-20-15 FINAL SUBMITTAL	

Drawn: NSR
Checked: KRW
Date: 07-08-14
Scale: AS SHOWN
File No.: 14118

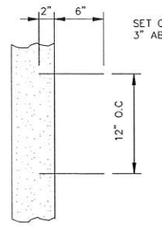

STEP DETAIL

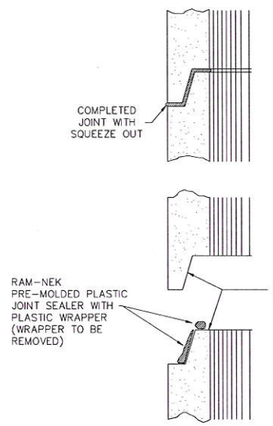

TONGUE AND GROOVE JOINT TYPICAL DETAIL

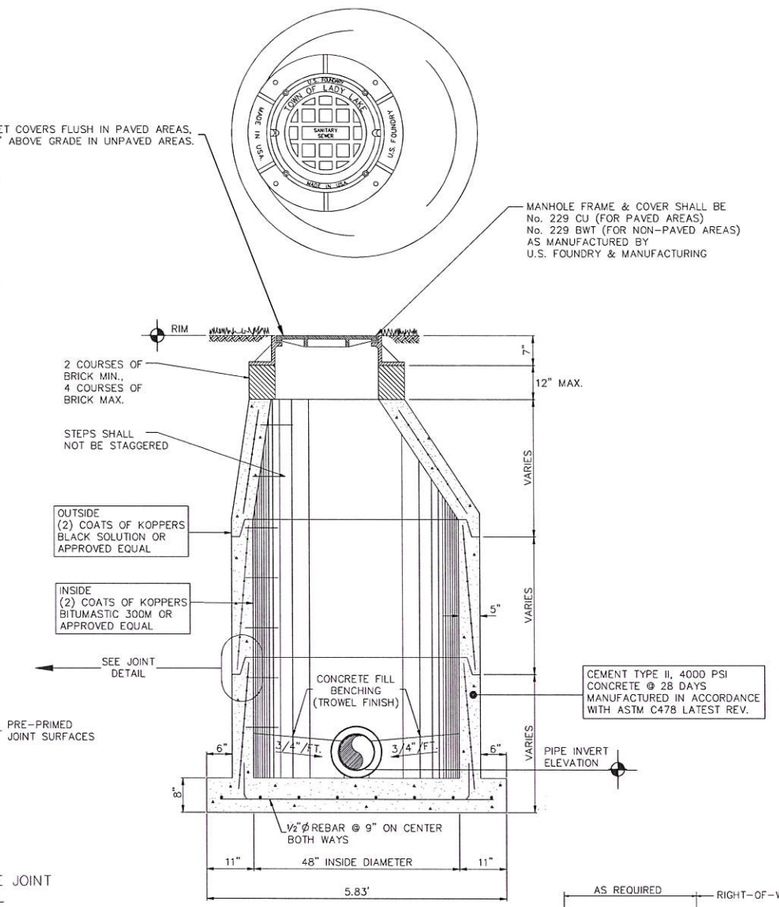

ALTERNATE-PRECAST MANHOLE TOPS MUST BE APPROVED IN ADVANCE.

SANITARY PRECAST MANHOLE DETAIL

N.T.S.

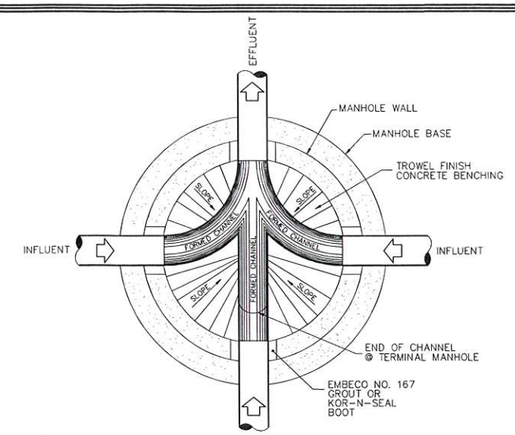

FLOW PATTERNS FOR INVERT CHANNELS

NOTES:

1. INVERT CHANNELS TO BE CONSTRUCTED FOR SMOOTH FLOW WITH NO OBSTRUCTIONS. HALF PIPE INVERT CHANNELS.
2. SPILLWAYS SHALL BE CONSTRUCTED BETWEEN PIPES WITH DIFFERENT INVERT ELEVATIONS PROVIDING FOR SMOOTH FLOWS.
3. CHANNELS FOR FUTURE CONNECTIONS (STUBS) SHALL BE CONSTRUCTED, FILLED WITH SAND AND COVERED WITH 1" OF MORTAR.
4. WHERE PIPE INVERTS DIFFER BY MORE THAN 2 FEET (2'), PROVIDE A TEE AND DROP-PIPE TO PREVENT SPLATTER.

TYPICAL MANHOLE PLAN

N.T.S.

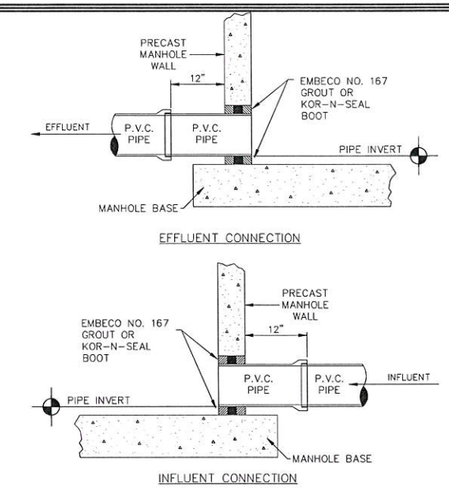

PIPE CONNECTION TO PRECAST SANITARY MANHOLE

N.T.S.

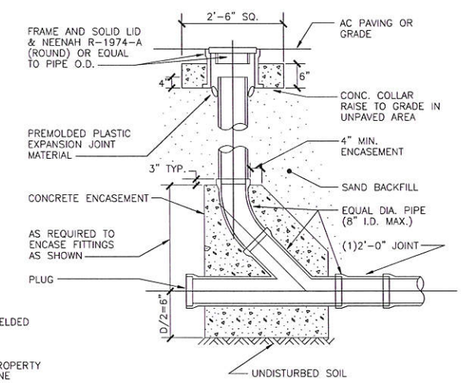

GRAVITY CLEANOUT

N.T.S.

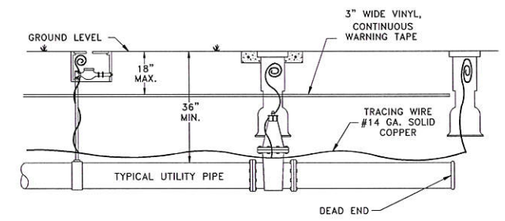

ALL CITY APPROVED PIPE INSTALLED WITHIN THE CITY'S WATER (POTABLE & RECLAIMED) OR SANITARY SEWER SYSTEM SHALL BE INSTALLED WITH 10 GA. SOLID COPPER TRACING WIRE.

THE TRACING WIRE MUST BE INSTALLED DIRECTLY ABOVE THE PIPE AND SHALL BE TAPED TO THE PIPE AT 10' INTERVALS. WIRE SHALL EXTEND A MINIMUM OF 12" ABOVE GRADE AT EACH INTERVAL AND BE COILED AND PLACED IN A VALVE BOX, METER BOX, MANHOLE, CLEANOUT OR OTHER APPLICABLE STRUCTURE.

TRACING WIRE BETWEEN INTERVALS SHALL BE INSTALLED SO AS TO PROVIDE CONTINUOUS CURRENT WHEN LINE LOCATION EQUIPMENT IS CONNECTED TO THE TRACING WIRE. WIRE BRANCHING FROM MAIN LINES SHALL BE LINKED BY CITY-APPROVED WATER TIGHT CONNECTORS.

1. POTABLE AND RECLAIMED WATER SYSTEMS: WIRE AND WARNING TAPE SHALL BE INSTALLED ON ALL PVC, ABS, PCCP AND OTHER PLASTIC MAINS AND SERVICE LINES AND ATTACHED TO VALVES, HYDRANTS, AND TEES. WIRE INSTALLED WITH SERVICE LINES SHALL CONNECT TO THE WIRE INSTALLED ABOVE THE MAIN AND EXTEND TO THE CURB STOP.
2. FIRE SPRINKLER LINES: WIRE SHALL CONNECT TO THE WIRE INSTALLED ABOVE THE MAIN AND EXTEND TO THE RISER CONNECTION.
3. SANITARY SEWER GRAVITY SYSTEM: WIRE AND WARNING TAPE SHALL BE INSTALLED ON SANITARY SEWER SYSTEM AND SHALL EXTEND UPWARD AND BE PLACED INTO MANHOLE STRUCTURES BETWEEN THE MANHOLE RING AND CONE. WIRE WITH SERVICE LATERALS SHALL CONNECT TO THE WIRE INSTALLED ABOVE THE MAIN AND BROUGHT TO THE SURFACE AT THE SEWER CLEANOUT.
4. SANITARY SEWER FORCE MAINS: WIRE AND WARNING TAPE SHALL BE INSTALLED ON THE FORCE MAIN AND BROUGHT TO THE SURFACE AND PLACED IN A METAL CITY-APPROVED VALVE BOX.
5. DEAD END MAINS: WIRE AND WARNING TAPE SHALL BE PLACED IN A PROPERLY IDENTIFIED BOX AT THE END OF THE RUN.

TRACING WIRE LOCATION DETAIL

N.T.S.

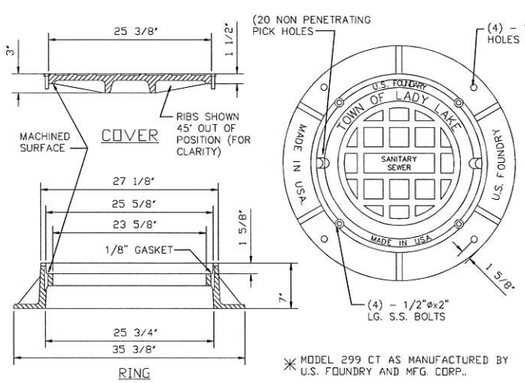

* MODEL 299 CT AS MANUFACTURED BY U.S. FOUNDRY AND MFG. CORP..

SANITARY MANHOLE COVER DETAIL

N.T.S.

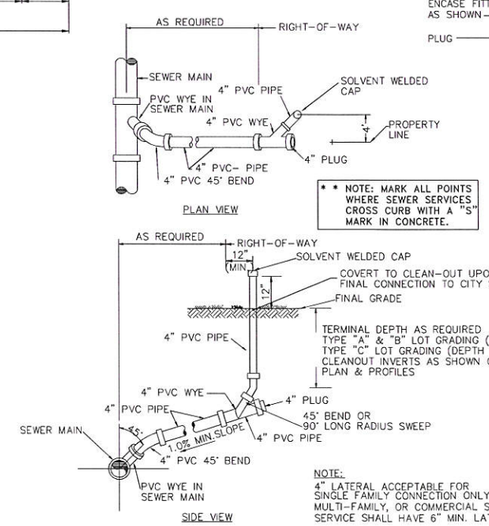

NOTE:
4" LATERAL ACCEPTABLE FOR SINGLE FAMILY CONNECTION ONLY, MULTI-FAMILY, OR COMMERCIAL SERVICE SERVICE SHALL HAVE 6" MIN. LATERAL.

SANITARY SEWER SERVICE

PVC SINGLE SERVICE

N.T.S.

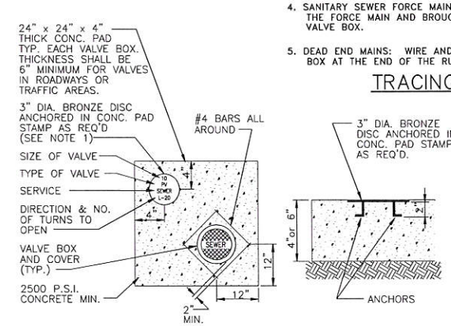

NOTES:
1. BRONZE IDENTIFICATION DISC SHALL BE REQUIRED FOR ALL VALVES

VALVE COLLAR

N.T.S.

Wicks Engineering Services, Inc.
225 West Main Street, Tavares, Florida 32778
www.wicksengineering.com (352) 343-8667
C.A. #30062

Village Veranda at Lady Lake, LLC.
Elizabeth Mark
55 Se 2nd Avenue, Suite 301
Delray Beach, Florida 33444

Village Veranda at Lady Lake
Civil Details
Lady Lake, Florida 32159

KENNETH RANDAL WICKS
LICENSE
No. 33274
STATE OF FLORIDA
PROFESSIONAL ENGINEER

KENNETH R. WICKS, P.E. FL. REG. NO. 33274
DATE: 2/23/15

REVISION:	DATE:
1-9-15 TOWN COMMENTS	
2-20-15 FINAL SUBMITTAL	

Drawn: NSR
Checked: KRW
Date: 07-08-14
Scale: AS SHOWN
File No.: 14118
Sheet: 16 of 16

K-8

TOWN COMMISSION AGENDA ITEM

REQUESTED COMMISSION MEETING DATE: March 2, 2015

SUBJECT: **MJSP 01/15-003- Lady Lake Crossing & Outparcel Major Site Plan - A Development consisting of 52,000 Sq. Ft. of New Retail Building Space, and a 4,000 Sq. Ft. Building Development on the Outparcel between Tire Kingdom and McDonald's (AKs 3872777 and 3877865).**

DEPARTMENT: **Growth Management**

RECOMMENDED MOTIONS:

Staff recommends approval of Major Site Plan 01/15-003 as presented; granting the request for a waiver to Chapter 10, Section 10-3,a).2)., meeting all other site specifications as required per the Town of Lady Lake Land Development Regulations and the provisions of the adopted Planned Unit Development Memorandum of Agreement of Ordinance 2006-04.

Applicant Martin DelleBovi, in representation of SRK Lady Lake 43 Associates LLC, property owner, has submitted a Site Plan application proposing approximately 52,000 square feet of retail space to be built into a 3-tenant building on the ±7-acre parcel behind the McDonald's Restaurant. For the .65-acre outparcel located in between the McDonald's Restaurant and the Tire Kingdom Shop, the developer proposes a 4,000-square-foot retail building. The landscaping and irrigation plans have been drawn by James Dunn Brown, Landscape Architect with Cuhaci & Peterson, dated January 12, 2015.

The subject area combined is approximately ±7.71acres and is located within the Lady Lake Crossing Plaza. The property is zoned "PUD" (Planned Unit Development); which permits development and construction of the proposed improvements in accordance with adopted CP Memorandum of Agreement Ordinance 2006-04. The requested uses are consistent with the directives of the Comprehensive Plan, adopted Land Development Regulations, and Ordinance #2006-04.

Site plans have been submitted by Jay R. Jackson, Professional Engineer with Kimley-Horn and Associates, Inc. The Landscaping and irrigation plans have been prepared and certified by Jay Brown, Registered Landscape Architect with Cuhaci & Peterson. For the proposed Mediterranean Retail Building, the Architectural Exterior Elevations were drawn by Cuhaci & Peterson. The applicant has complied with requirements pursuant to the Land Development Regulations (LDRs) for site plans, including Chapter 7-Site Plan

Development Regulations, Chapter 10–Landscaping & Tree Protection, Chapter 14-Water, Reuse Water, and Sewer Standard Specifications, and Chapter 20-Commercial Design Standards of the LDRs. Reviews were completed for the Town of Lady Lake by Town staff, Neel-Schaffer Engineering, and Fire Inspector Kerry Barnett for compliance with the Florida Fire Prevention Code. Attached are following reviews contained in the packet:

a. Town Engineer comments for the site plan dated February 24, 2015 (Satisfied).
b. Fire Review comments dated February 24, 2015 (Satisfied).
c. Waste Management comments dated February 24, 2015 (Satisfied).
d. Lady Lake Building Official comments dated January 26, 2015 (Satisfied).
e. Lake-Sumter MPO comments dated January 27, 2015 (Satisfied)
f. Lady Lake Public Works comments dated February 19, 2015 (Satisfied).
g. St. Johns River Water Management District Permit Modification No.106359-13.

Tree Requirements:

As per **Chapter 10, Section 10-3,a).2).**, all non-residential properties are required to provide 160 tree caliper inches per acre. The site is required to provide 1233.6 tree caliper inches based upon its 7.71-acre area (160"x 7.71) Please see the landscaping tree proposal breakdown:

Existing Trees on site	0	tree caliper inches
Proposed Trees for the site	990.5	tree caliper inches
Total tree caliper inches	990.5	tree caliper inches

At this time the applicant is requesting a landscaping waiver from the requirements of **Chapter 10, Section 10-3,a).2).** in the amount 243.1 tree caliper inches.

Justification: Aside from this provision, the applicant has met all landscaping requirements as it pertains to landscaping buffers, landscaping around vehicular areas and the base of the buildings. The proposed landscaping complements and is consistent with the existing landscaping on the site. Additionally, the proposed plant material has been positioned to avoid overcrowding of trees; which can adversely affect the healthy long-term growth and longevity of the plant material. Lastly, the applicant is receptive to making applicable donations to the tree bank in accordance to the Code.

Notes:

- No trees removals have been proposed for this project as part of the application.

Public Meetings:

At the December 15, 2014 meeting of the **Special Town Commission Conceptual Workshop** the Commission reached consensus to advance the development plan as presented.

The **Technical Review Committee** members individually reviewed the application on, and provided all final comments regarding the Site Plan application on February 24, 2015.

The **Planning and Zoning Board** does not review Site Plan applications.

The application was presented before the **Parks, Recreation and Tree Advisory Committee** on February 11, 2015, which recommended approval of the project with a 4-0 vote.

FISCAL IMPACT: **$0** **[ ] Capital Budget**
[ ] Operating
[ ] Other

ATTACHMENTS: **[ ] Ordinance** **[ ] Resolution** **[ ] Budget**

[X] Other – Site Plan

[ ] Support Documents/Contracts Available for Review in Manager's Office

---

DEPARTMENT HEAD	**Submitted** 2/24/15	**Date**
FINANCE DEPARTMENT	**Approved as to Budget Requirements**	**Date**
TOWN ATTORNEY	**Approved as to Form and Legality**	**Date**
TOWN MANAGER	**Approved Agenda Item for:** 3/2/15	**Date** 2/24/15

COMMISSION ACTION:

[ ] Approved as Recommended **[ ] Disapproved**

[ ] Tabled Indefinitely

[ ] Continued to Date Certain **[ ] Approved with Modification**

TOWN OF LADY LAKE
APPLICATION FOR SITE PLAN REVIEW

1. Applicant's Name: SRK Lady Lake 43 Associates LLC – Martin DelleBovi
   Telephone Number: 716-833-4986

   Email: MDelleBovi@Benchmarkgrp.com

   Applicant is: Owner X Developer ___ Lessee ___ Agent ___ Optionee ___

2. Owner's Name: SRK Lady Lake 43 Associates LLC

   Address: 4053 Maple Road, Amherst, NY 14226

   Telephone Number: 716-833-4986

3. Contractor's Name: TBD

   Address: _____

   Telephone Number: _____

   License Number: _____

4. Architect's Name: Cuhaci & Peterson Architects, Engineers & Planners

   Address: 1925 Prospect Ave., Orlando, FL 32814

   Telephone Number: 407-661-9100

   Registration Number: _____

5. Landscape Architect: Cuhaci & Peterson Architects, Engineers & Planners

   Address: 1925 Prospect Ave., Orlando, FL 32814

   Telephone Number: 407-661-9100

   Registration Number: _____

6. Project Name: Lady Lake Crossing East

   Physical Location/Address: _____

7. The property is located in the vicinity of the following streets:

   Hwy 441/27 & Fennell Blvd

8. Area of property 350,222 Square Feet 8.04 Acres

9. The exact legal description of the property as shown on the Tax Receipt or the Warranty Deed, or attach a separate sheet to the application form:

Legal Description Attached

10. The property is currently zoned: PUD

11. Briefly describe the proposed project: Final phase of retail development, two retail buildings totaling 56,270 SF

If for storage, what type of material will be stored? N/A

12. Have any development reviews and/or approvals been granted to this property?
Yes X No ____ If yes, list the type, date and result:

Town Commission December 15, 2014

13. Has any Variance been granted concerning this property? Yes ____ No X
If yes, list the Case Number and briefly describe the nature of the Variance.

14. The plans shall be drawn on 24" x 36" sheets as a minimum, at the largest scale feasible. The plans or any portion thereof involving engineering, shall be certified by a professional engineer or landscape architect as required by SJRWMD. The following information must be included on the site plan:

General Information

____ a. Name of project.

____ b. General statement of intended use of site.

____ c. Legal description of the property and size of parcel in acres or square feet.

____ d. Name and address of owner.

____ e. Name, address and phone number of owner's agent.

____ f. Name, address, signature and registration of the professionals preparing the plans.

____ g. Date, north arrow and scale shall be designated and where appropriate, the same scale shall be used on all sheets.

____ h. Vicinity map showing relationship of proposed development to the surrounding streets and thoroughfares, shall be at a scale no smaller than one inch equals five thousand two hundred eighty feet (1" = 5,280' or 1" = Mile).

____ i. Linear dimensions of the site.

____ j. Existing topography with a maximum of one (1) foot contour intervals for the proposed site.

____ k. Finished grading elevations.

____ l. Zoning of the site and of all adjacent parcels.

____ m. All existing and proposed building restriction lines (i.e., highway setback lines, easements, covenants, rights-of-way and building setback lines).

____ n. Percent of open space of site.

____ o. Location of proposed signs.

Commercial Design Standards

The following are submittal requirements for the Commercial Design Standards, which can be directly sent to the Town's Design Consultant, with one copy going to the Town's Growth Management Department:

____ a. Scaled building elevations for all facades of the proposed building(s).

____ b. All samples of building materials and colors proposed including glass for proposed development.

____ c. Scaled Landscape Plan showing all existing trees to be retained and proposed landscaping material to be added (Chapter 10 of the LDRs).

____ d. Copy of the scaled site plan showing all requirements and adjacent land uses.

Building and Structure

____ a. Existing and proposed structures.

____ b. Intended use.

____ c. Number of stories.

____ d. Height of building(s).

____ e. Number of dwelling units and density.

____ f. Projected number of employees, if applicable.

____ g. If restaurant, show number of seats and occupancy load.

____ h. Square footage for proposed development, i.e., gross square footage, nonstorage area, square footage of each story, gross square footage of sales area, etc.

____ i. Photograph or sketch of proposed sign with dimensions and material type.

Street, Sidewalks, Driveways, Parking Areas and Loading Spaces

____ a. Engineering plans and specifications for streets, alleys, sidewalks and driveways to include soil borings, if necessary.

____ b. All parking spaces delineated.

____ c. Number of parking spaces.

____ d. Number and location of handicapped spaces.

____ e. Number of square feet of paved parking and driveway area.

____ f. Surface materials and cross-section of proposed paved areas.

____ g. Fire lanes per the Standard Fire Prevention Code adopted in the Building and Fire Codes chapter.

____ h. Description/location of proposed driveway(s) and median cut(s).

____ i. Internal traffic control circulation plan, including directional arrows and signs to direct traffic flow, as necessary.

____ j. Location of traffic-control signs and signalization devices, if required.

____ k. Number and location of required loading spaces.

____ i. Number and location of required bicycle spaces.

Drainage and Stormwater

____ a. Soil classifications, cross-sections and details of proposed retention/detention ponds, swales, berms, etc., as required by SJRWMD.

____ b. Size, material and location of stormwater structures and pipes.

____ c. Indicate flood elevation for 100-year flood and any other information required in Environmental Regulations chapter.

Proposed Water, Sewer and Solid Waste Facilities

____ a. Size, material, specifications and location of water mains, valves, services and fire hydrants.

____ b. Size, material, specifications and location of sanitary sewer lines and laterals with submittal of a profile, if necessary.

____ c. Size and location of septic tank and drainfield, if applicable.

____ d. Grease separation system, if applicable: Size, location and materials.

____ e. Location(s) and access provisions for refuse service, including pad, screening, fencing and landscaping, if applicable.

Landscaping

____ a. Landscaping plan and provisions for maintenance including size, type and location of all landscaping, screens, walls, fences and buffers per the requirements in the Landscaping and Tree Protection chapter. If water efficient landscaping is used, the information required in that chapter should be included.

____ b. Irrigation system plan.

Environmental Protection

____ a. Natural features such as waterbodies, wetlands, native vegetative communities, etc., as required in the Environmental Regulations chapter.

____ b. Conservation easements per the requirements.

____ c. Provisions for the adequate control of erosion and sediment, including the location and description of the methods to be utilized during and after all phases of clearing, grading and construction.

ADDITIONAL INFORMATION TO BE PROVIDED

____ a. A certificate of concurrency or evidence of application for a certificate.

____ b. An application for a clearing and tree permit meeting all criteria specified in the Developmental Procedures and Regulations chapter and the Landscaping and Tree Protection chapter.

____ c. Drainage calculations as required in the Stormwater Management chapter.

____ d. Fire flow calculations, if applicable.

____ e. Lift station calculations, where required.

____ f. Copy of HRS permit, where required.

____ g. A construction cost estimate prepared by the engineer of record, which shall delineate any proposed improvements to be maintained by the Town.

____ h. Environmental assessment per the requirements, if applicable.

____ i. Any additional data, maps, plans or statements, as may be required, which is commensurate with the intent and purpose of the Code.

Mark J. DeLaBar

Signature of Applicant

PLEASE SUBMIT APPLICATION TO THE GROWTH DEVELOPMENT DEPARTMENT ACCOMPANIED BY TEN (10) COPIES OF THE SITE PLAN AND ONE (1) 11 X 17 (SIGNED AND SEALED IF REQUIRED), APPROPRIATE REVIEW FEES, PROOF OF OWNERSHIP AND ALL APPLICABLE INFORMATION AND DOCUMENTATION AS REQUIRED BY LADY LAKE ORDINANCE 94-08, LAND DEVELOPMENT REGULATIONS, ADOPTED AUGUST 15, 1994.

Office Use:

Date Application Received: 01-20-2015 Received by: Wthew

Fees Paid:	Site Development Plan - Minor	~~$1,000.00~~	
	Site Development Plan - Major	~~2,500.00~~	$4,000.00
	Site Plan Modification - Major	~~4,500.00~~	
	Site Plan Modification – Minor	~~600.00~~	
	Commercial Design Standards		975.00
			$4,975.00

APPLICANT'S AFFIDAVIT

STATE OF FLORIDA
COUNTY OF LAKE

Before me, the undersigned authority, personally appeared Martin, who being by me first duly sworn on oath, deposes and says:

(1) That he/she affirms and certifies that he/she understands and will comply with all ordinances, regulations, and provisions of the Town of Lady Lake, Florida, and that all statements and diagrams submitted herewith are true and accurate to the best of his/her knowledge and belief, and further, that this application and attachments shall become part of the Official Records of the Town of Lady Lake, Florida, and are not returnable.

(2) That he desires approval for: Major Site Plan - Site for Lady Lake Crossings

(3) That the submittal requirements for the application have been completed and attached hereto as part of this application.

Affiant (Applicant's Signature)

The foregoing instrument was acknowledged before me this 20th day of January, 2015, by Martin Dellabou, who is personally known to me or who has produced _____ as identification and who did (did not) take an oath.

Notary Public

Notary Public State of Florida
Wendy Then
My Commission FF 177989
Expires 12/20/2018

OWNER'S AFFIDAVIT

STATE OF FLORIDA
COUNTY OF LAKE

Before me, the undersigned authority, personally appeared Martin Dellebori, who being by me first duly sworn on oath, deposes and says:

(1) That he/she is the fee-simple owner of the property legally described on page one of this application.

(2) That he/she desires approval for:
Major Site Plan - Lady Lake Crossing

(3) That he/she has appointed Self to act as agent in his/her behalf to accomplish the above. The Owner is required to complete the APPLICANT'S AFFIDAVIT of this application if no agent is appointed to act in his/her stead.

Martin J. Dellebori
Affiant (Owner's Signature)

The foregoing instrument was acknowledged before me this 20th day of January 2015, by Martin Dellebori, who is personally known to me or who has produced _____ as identification and who did (did not) take an oath.

Wendy Then
Notary Public

Notary Public State of Florida
Wendy Then
My Commission FF 177989
Expires 12/20/2018

NOTE

All applications shall be signed by the owner of the property, or some person duly authorized by the owner to sign. This authority authorizing a person other than the owner to sign must be attached.

PROPERTY RECORD CARD

General Information

Owner Name:	SRK LADY LAKE 43 ASSOCIATES LLC	**Alternate Key:**	3872777
Mailing Address:	4053 MAPLE RD AMHERST, NY 14226 *Update Mailing Address*	**Parcel Number:**	08-18-24-100000000600
		Millage Group and City:	00LL (Lady Lake)
		Total Millage Rate:	19.04670
		Trash/Recycling /Water/Info:	*My Public Services Map*
Property Location:	LADY LAKE FL 32159 *Update Property Location*	**Property Name:**	-- *Submit Property Name*
		School Locator:	*School and Bus Map*
Property Description:	LADY LAKE, LADY LAKE CROSSING SUB LOT 6 BEING IN 17-18-24 PB| 63 PG 57-58 |		

Land Data

Line	Land Use	Frontage	Depth	Notes	No. Units	Type	Class Value	Land Value
1	VACANT COMMERCIAL (1000)	0	0		322120.95	SF	$0.00	$1,127,423.00

Miscellaneous Improvements

There is no improvement information to display.

Sales History

There is no sales history information to display.

Values and Estimated Taxes

Tax Authority	Just Value	Assessed Value	Taxable Value	Millage	Estimated Taxes
LAKE COUNTY BCC	$1,127,423	$1,127,423	$1,127,423	5.38560	$6,071.85
LAKE COUNTY MSTU AMBULANCE	$1,127,423	$1,127,423	$1,127,423	0.46290	$521.88
LAKE COUNTY MSTU FIRE	$1,127,423	$1,127,423	$1,127,423	0.47040	$530.34
SCHOOL BOARD STATE	$1,127,423	$1,127,423	$1,127,423	5.74600	$6,478.17
SCHOOL BOARD LOCAL	$1,127,423	$1,127,423	$1,127,423	1.50000	$1,691.13
TOWN OF LADY LAKE	$1,127,423	$1,127,423	$1,127,423	3.75000	$4,227.84
ST JOHNS RIVER FL WATER MGMT DIST	$1,127,423	$1,127,423	$1,127,423	0.31640	$356.72
LAKE COUNTY VOTED DEBT SERVICE	$1,127,423	$1,127,423	$1,127,423	0.16000	$180.39
LAKE COUNTY WATER AUTHORITY	$1,127,423	$1,127,423	$1,127,423	0.25540	$287.94
NORTH LAKE HOSPITAL DIST	$1,127,423	$1,127,423	$1,127,423	1.00000	$1,127.42

PROPERTY RECORD CARD

General Information

Owner Name:	SRK LADY LAKE 43 ASSOCIATES LLC	**Alternate Key:**	3877865
Mailing Address:	4053 MAPLE RD AMHERST, NY 14226 *Update Mailing Address*	**Parcel Number:**	08-18-24-100100000200
		Millage Group and City:	00LL (Lady Lake)
		Total Millage Rate:	19.04670
		Trash/Recycling /Water/Info:	*My Public Services Map*
Property Location:	440 NORTH HWY 27/441 LADY LAKE FL 32159 *Update Property Location*	**Property Name:**	-- *Submit Property Name*
		School Locator:	*School and Bus Map*
Property Description:	LADY LAKE, LADY LAKE CROSSING LOT 5 REPLAT SUB LOT 2 BEING | IN 17-18-24 PB 64 PG 17 |		

Land Data

Line	Land Use	Frontage	Depth	Notes	No. Units	Type	Class Value	Land Value
1	VACANT COMMERCIAL (1000)	0	0		27787	SF	$0.00	$361,231.00

Miscellaneous Improvements

There is no improvement information to display.

Sales History

There is no sales history information to display.

Values and Estimated Taxes

Tax Authority	Just Value	Assessed Value	Taxable Value	Millage	Estimated Taxes
LAKE COUNTY BCC	$361,231	$361,231	$361,231	5.38560	$1,945.45
LAKE COUNTY MSTU AMBULANCE	$361,231	$361,231	$361,231	0.46290	$167.21
LAKE COUNTY MSTU FIRE	$361,231	$361,231	$361,231	0.47040	$169.92
SCHOOL BOARD STATE	$361,231	$361,231	$361,231	5.74600	$2,075.63
SCHOOL BOARD LOCAL	$361,231	$361,231	$361,231	1.50000	$541.85
TOWN OF LADY LAKE	$361,231	$361,231	$361,231	3.75000	$1,354.62
ST JOHNS RIVER FL WATER MGMT DIST	$361,231	$361,231	$361,231	0.31640	$114.29
LAKE COUNTY VOTED DEBT SERVICE	$361,231	$361,231	$361,231	0.16000	$57.80
LAKE COUNTY WATER AUTHORITY	$361,231	$361,231	$361,231	0.25540	$92.26
NORTH LAKE HOSPITAL DIST	$361,231	$361,231	$361,231	1.00000	$361.23

APPLICATION FOR UTILITY QUOTE

Town of Lady Lake, 409 Fennell Boulevard, Lady Lake, Florida 32159 USA
Utility Customer Service (352) 751-1525 Public Works Administration (352) 751-1526

Project Name: Lady Lake Crossing East Alias/FKA (if applicable): _____

Project Location Address: _____ Alternate Key #: _____

Project Point of Contact*: Martin J DelleBovi Company: The Benchmark Group

Phone Number: 716-833-4986 E-Mail Address: MDelleBovi@Benchmarkgrp.com

Name of Individual Completing this Application: Martin DelleBovi Date: January 19, 2015

**All correspondence and questions from Town Staff will be directed solely to this individual*

Property Owners Name: SRK Lady Lake 43 Associates LLC

Address: 4053 Maple Road City/State/Zip Amherst, NY 14226

Fax #: 716-833-2954 Phone Number: 716-833-4986 E-Mail Address: _____

Tenants Name (if applicable): _____

Legal Street Address: _____ City/State/Zip _____

Fax #: _____ Phone Number: _____ E-Mail Address: _____

Type of Project: Residential ____ Commercial X Irrigation ____ Square Footage/Units: _____

Occupant Information: Owner Occupied _____ Leased/Rented X

Utility Account will be Established and Billed in the name of the Following:

Name: SRK Lady Lake 43 Associates LLC Phone: 716-833-4986

Address: 4053 Maple Road City/State/Zip Amherst, NY 14226

Estimated Consumption* (ERUs): Water (Potable) _____ Sewer _____ Reuse _____

**Calculations shall be based upon the Specifications of the Land Development Regulations, Chapter 14, Appendix A. If consumption amounts being proposed differ from calculations resulting from the figures as supplied by the ERU matrices, please attach a justification letter from a professional engineer as to why lesser quantities, or greater quantities, are being sought for the project.*

Growth Management Personnel Verification of Completed Form: Name: _____ Date: _____

Kimley»Horn

January 23, 2015

Ms. Olga V. Marcondes
Transportation Planner
Lake-Sumter Metropolitan Planning Organization
1616 South 14th Street
Leesburg, FL 34748

RE: ***Traffic Analysis – Lady Lake Crossings East (aka 43-Acre Property)***
Kimley-Horn Project No. 049372008

Dear Ms. Marcondes,

Kimley-Horn and Associates, Inc. is providing this trip generation and transportation analysis in support of the site plan submittal for the Lady Lake Crossings East site. The project site is generally located south of US 27/US 441, east of Fennell Boulevard in the Town of Lady Lake, Lake County, Florida. A Traffic Impact Analysis was previously performed for the Lady Lake Crossings Site (aka 43-Acre Property) in 2007. Transportation infrastructure improvements were made by the developer at the time of the original development approval, including construction of Fennell Boulevard through the site and construction of a traffic signal on US 27/US 441 at Fennell Boulevard. A portion of the site is currently built, and there has been continual development on the site over the past few years. Site plans for the remainder of the development are in the process of being submitted through the Town of Lady Lake for review. Based on discussions with Town of Lady Lake staff, the Town is supportive of the project moving forward as it has in the past without a full traffic study update. The information provided in this letter will allow the Lake-Sumter MPO to update the TMS database for the unbuilt portions of the development, while utilizing information previously provided in the 2007 TIA.

Project Trip Generation

The development program assumed for the 2007 transportation analysis was 190,000 square feet of commercial retail and a 100-room hotel. The total external net new trip generation for the site calculated in the prior transportation analysis was 546 PM peak hour trips (254 in, 292 out). Currently, the Lady Lake Crossings Development has 144,245 square feet of built retail commercial space. A site plan has been submitted to the Town of Lady Lake for a total development program of 54,780 square feet of retail on the Lady Lake Crossings East site. An additional 4,500 square foot retail outparcel (outparcel M) is proposed for the Lady Lake Crossings Site, for which a site plan will be submitted to the Town of Lady Lake later this year. These two site plan submittals will complete the development. Therefore, the total build-out program of the site is 203,525 square feet of commercial retail. A hotel is no longer proposed.

The trip generation potential of the proposed build-out development program was estimated utilizing the Institute of Transportation Engineer's (ITE) Trip Generation, 9th Edition Land Use Code 820 (Shopping Center). Pass-by capture and Internal Capture with the adjacent 25-acre retail site were applied consistent with the 2007 study. Based on the trip generation calculations, the proposed development program is anticipated to generate 27 PM peak hour trips less than that assumed in the 2007 traffic study (519 PM peak hour external net new trips).

The new proposed portions of the development (59,280 square feet) are projected to generate 106 PM peak hour net new external trips (51 in, 55 out) on the transportation network. The trip generation calculations for the site are shown in the attached **Table 1**.

Project Trip Distribution and TMS Roadway Segment Impact

The traffic distribution from the 2007 TIA was utilized to assign project trips from the proposed portion of the development to the adjacent Lake County TMS roadway segments included in the original 2007 study. The trip distribution was based on version VI of the Central Florida Regional Planning Model (CFRPM), which was the most recent version at the time of the 2007 study. The CFRPM model has been updated since the original study. The original trip distribution appears reasonable considering known developments and travel patterns in the area, and therefore was utilized to assign the net new project trips to the TMS segments. **Figure 1** illustrates the trip distribution from the model plot, and is included as an attachment.

The existing roadway information, existing traffic counts, and vested traffic counts were obtained from the Lake County TMS Segment Report, dated January 16, 2015. PM peak hour project trips from the proposed unbuilt portions of the development were added to the total 2014/2015 traffic volumes. The build-out traffic volumes were compared to the adopted service volume of the roadway segment. All roadway segments are expected to operate with acceptable level of service, with the exception of Rolling Acres Road, from US 27/US 441 to CR 466. This roadway segment has a failing level of service with 2014/2015 total traffic conditions before the addition of project traffic; therefore, no mitigation would be required by the proposed development. **Table 2** shows the existing traffic conditions, project traffic impact, and build-out level of service for the TMS study area roadways.

No new roadway deficiencies are expected within the study area due to the additional traffic from the remainder of the proposed development.

Summary

The Lady Lake Crossings retail development has been under continual development over the past few years. The developer is in the process of submitting site plans through the Town of Lady Lake for the remaining 59,280 square feet of the site, after which time the development will be complete. The total proposed development program is 203,525 square feet of commercial retail. A traffic impact analysis was approved in 2007 assuming a development program of 190,000 square feet of commercial retail and a 100-room hotel.

The developer has made transportation improvements identified in the original study and there has been continual development on the site. The anticipated build-out net new traffic is less than that originally analyzed. Furthermore, there are no roadway deficiencies caused by the additional trips from the proposed development program when considering the most recent traffic volumes reported in the Lake County TMS. Therefore, it is recommended that this analysis satisfy the traffic study requirements for the development of the remainder of the site, without the need for additional traffic data collection and a full study update.

Please contact me with any questions you may have during your review of the attached materials.

Sincerely,

Amber L. Gartner, PE
ALG/eyw

Attachments: Table 1 – Trip Generation
Figure 1 – Site Location and Project Trip Distribution
Table 2 – Roadway Segment Analysis
2007 Traffic Study for the 43-Acre Development

Cc: Jay Jackson, PE – Kimley-Horn and Associates, Inc.
Marty DelleBovi – Benchmark Group
Thad Carroll – Town of Lady Lake
File

K:\OCA_Civil\049372008 - Lady Lake Crossings East\doc\Lom150123alg.docx

Kimley»Horn

Table 1: Trip Generation

Land Use Scenario	Intensity	PM Peak Hour of Adjacent Street		
		Total	In	Out
Approved Project Trips [1]				
Retail/Shopping Center	190,000 sf	515	236	279
Hotel	100 rooms	31	18	13
		546	254	292
Existing Built Project Trips [3]				
Retail / Shopping Center [4]	144,245 sf	766	368	398
Internal Capture with 25-Acre Site [2]	20.3%	155	75	80
Pass-By Capture Trip Reduction [2]	32.4%	198	95	103
Subtotal		413	198	215
Proposed Build-out Project Trips				
Retail / Shopping Center [4]	203,525 sf	964	463	501
Internal Capture with 25-Acre Site [2]	20.3%	196	94	102
Pass-By Capture Trip Reduction [2]	32.4%	249	120	129
Subtotal		519	249	270
NET NEW EXTERNAL TRIPS (PROPOSED - EXISTING) →		**106**	**51**	**55**
NET NEW EXTERNAL TRIPS (PROPOSED - APPROVED) →		**-27**	**-5**	**-22**

Note 1: Approved trip generation was obtained from the approved 2007 TIA.

Note 2: Internal Capture with the adjacent 25-Acre Commercial Site and Pass-by Capture Rates are utilized consistent with the approved 2007 TIA.

Note 3: Includes the existing Lady Lake Crossings Development, Tire Kingdom, and McDonalds.

Note 4: Trip generation or the retail/shopping center was calculated using the following data from ITE's Trip Generation, 9th Edition

Retail/Shopping Center [820]

PM PK Hr of Adj Street $Ln(T) = 0.67*Ln(X) + 3.31$ (X is 1000 Sq Feet Gross Leasable Area; 48% in, 52% out)

\\ocafp01\data\Project\OCA_Civil\049372008 - Lady Lake Crossings East\xls\[Tables.xlsx]TAble 3

Kimley»Horn

Figure 1 – Site Location and Trip Distribution

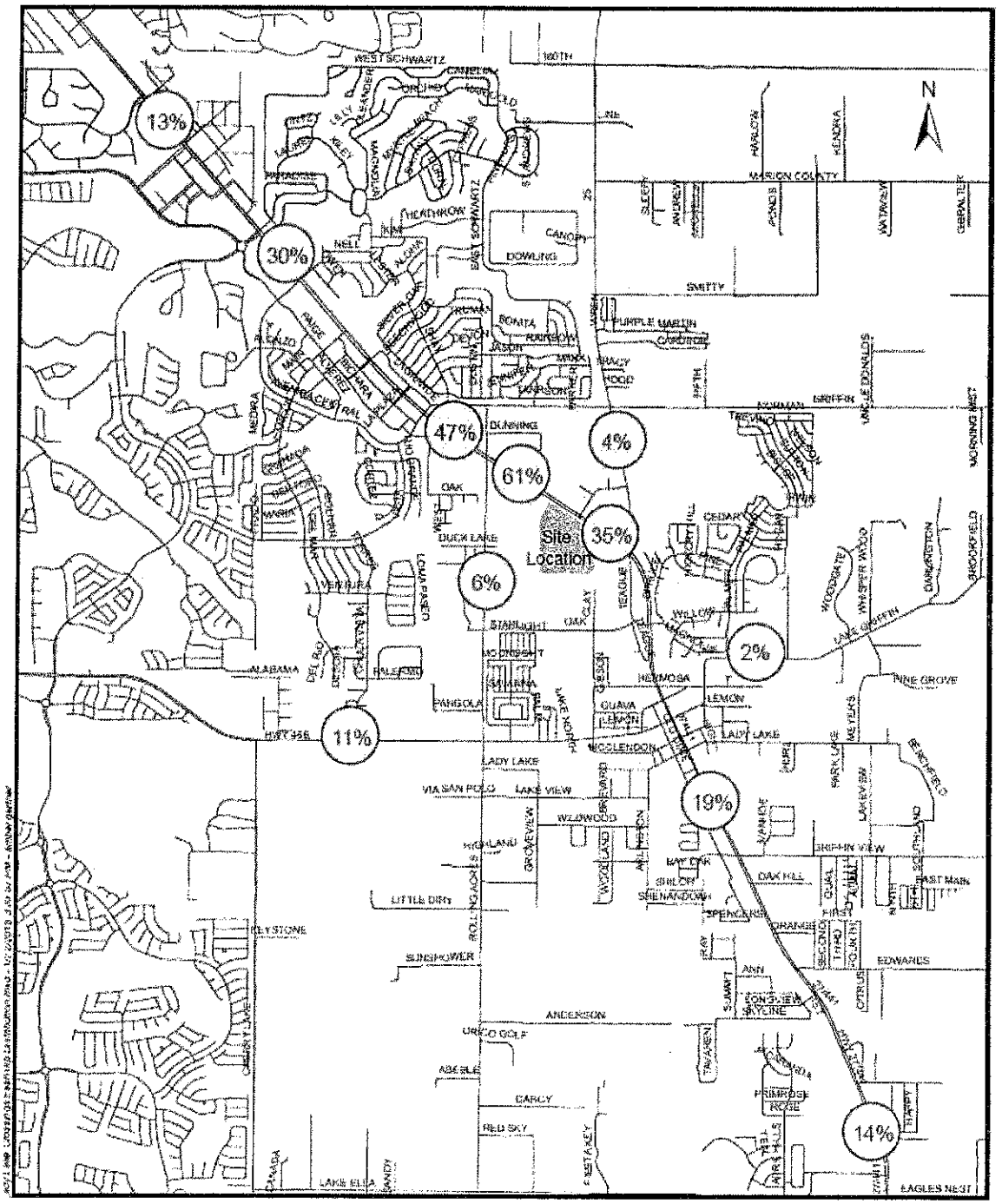

Kimley»Horn

Table 2: Roadway Segment Analysis

Roadway From	To	Segment ID	Peak Hour Directional Service Capacity [1]	PM Peak Hour Existing Traffic [1]		PM Peak Hour Vested Project Traffic [1]		PM Peak Hour Project Traffic			PM Peak Hour Build-out Total Traffic [3]		Build-out V/C Ratio	Build-out LOS
				NB / EB	SB / WB	NB / EB	SB / WB	% Assign [2]	NB / EB	SB / WB	NB / EB	SB / WB		
CR 25														
MARION COUNTY LINE	GRIFFIN AVENUE	210	750	532	238	10	9	4%	2	2	544	249	0.73	D
GRIFFIN AVENUE	US 27 / US 441	220	750	383	309	37	67	4%	2	2	422	378	0.56	D
CR 466														
SUMTER COUNTY LINE RD	ROLLING ACRES ROAD	1020	1,820	1,052	1,136	120	157	11%	6	6	1,178	1,299	0.71	C
ROLLING ACRES ROAD	US 27	1030	2,000	682	575	103	175	11%	6	6	791	756	0.40	C
ROLLING ACRES ROAD														
US 27 / US 441	OAK STREET	2750	675	863	920	46	36	6%	3	3	912	959	1.42	F [4]
OAK STREET	CR 466	2760	675	685	854	47	48	6%	3	3	735	905	1.34	F [4]
CR 466	LAKE ELLA ROAD	2770	612	239	270	8	4	0%	0	0	247	274	0.45	C
US 27/US 441														
SUMTER COUNTY LINE	GRIFFIN AVENUE	3670	3,020	1,378	1,391	114	119	30%	17	15	1,509	1,525	0.50	C
GRIFFIN AVENUE	ALT US 441 / ALT US 27	3680	2,000	925	1,108	272	222	61%	31	34	1,228	1,364	0.68	C
ALT US 441 / ALT US 27	CR 466	3690	2,000	925	1,108	303	230	35%	18	19	1,246	1,357	0.68	C
CR 466	LAKE ELLA ROAD	3700	2,000	925	1,558	166	235	19%	10	10	1,101	1,803	0.90	C

\\ocafp01\data\Project\OCA_Civil\049372008 - Lady Lake Crossings East\xls\[Tables.xlsx]Table 2

1/23/2015

Note:

1. The roadway information was obtained from the Lake County TMS Roadway Segment Table, dated January 16, 2015.
2. Percent project traffic was calculated as the maximum across the segment.
3. The build-out total traffic volumes were calculated as the sum of the existing traffic volumes, vested/reserved traffic volumes, and project traffic volumes from the new proposed undeveloped portion of the development.
4. This roadway segment has a failing level of service with existing plus vested project traffic conditions, before addition of project traffic.

SPECIAL TOWN COMMISSION - CONCEPTUAL WORKSHOP AGENDA ITEM

REQUESTED COMMISSION MEETING DATE: February 18, 2015

SUBJECT: **Site Plan Conceptual Presentation for Lady Lake Crossing Outparcel M – Located at the southwest corner of N. Hwy 27/441 and Fennell Blvd. for the construction of a 4,500 square-foot retail building (Alternate Key 3872774).**

DEPARTMENT: **GROWTH MANAGEMENT**

STAFF RECOMMENDATION:

Town Staff is soliciting feedback from the Town Commission regarding the proposed elevations as submitted for the project. The applicant is still compiling the engineering for the site plan; however, upon full site plan submittal anticipates no requested waivers for the project.

SUMMARY:

SRK Lady Lake 43 & Associates, also known as the Benchmark Group, is the property owner of a 41-acre parcel located at the southeast corner of N. Hwy 27/441 and Fennell Boulevard designated as Lady Lake Crossings. The property has a zoning designation of PUD-Planned Unit Development, which is governed under the Memorandum of Agreement (MOA) of Ordinance 2006-04.

The Lady Lake Crossing Plaza recently completed the McDonald's Restaurant and the developer has submitted plans to develop the 7-acre parcel into approximately 52,000 square feet of retail space to be built into a 3-tenant building. For the .65-acre outparcel located in between the McDonald's Restaurant and the Tire Kingdom Shop, the developer proposes a 4,000-square-foot retail building.

At this time, the developer is ready to move forward with a proposal to develop the last outparcel (Outparcel M) as a 4,500-square-foot communication retail store. Prior to submitting the site plan application, the applicant would like to present the proposal as prepared to date and get the Commission's input. Within your packets, you will find the following information

- Planned Unit Development Memorandum of Agreement Ord. 2006-04
- Architectural Design Exterior Building Elevations

NEEL-SCHAFFER
Solutions you can build upon

engineers
planners
surveyors
environmental scientists
landscape architects

February 24, 2015

Mrs. Wendy Then
Town of Lady Lake
409 Fennell Blvd.
Lady Lake, FL 32159

REFERENCE: NEW SITE PLAN – LADY LAKE CROSSING

Dear Wendy;

Pursuant to your request, Neel-Schaffer, Inc. (NSI) has reviewed the revised development plans submitted by Kimley Horn and Associates received by the Town, for the above referenced project. Our efforts in reviewing the development documents focused on Civil Site, Traffic/Transportation, Stormwater Drainage, Sanitary Sewer, Water Supply, Landscaping and Erosion Control based on the standards provided in the Land Development Code Regulations (LDCR) of the Town of Lady Lake.

Based on our review of the updated plans provided by your office, NSI has found the development plans satisfactory and in compliance with the Lady Lake LDRs. If you have questions or comments, please do not hesitate to contact me at 407-647-6623.

Sincerely,

Steven R. Cockerham, P.E.
Senior Project Manager

2301 Lucien Way, Suite 300 • Maitland, FL 32751 • 407-647-6623 fax: 407-539-0575

Kerry Barnett Fire Safety Consulting

43951 CR 54E, Kathleen, FL 33849

Fire Safety Inspector
Kerry Barnett

Cell (813) 778-4981
E-mail: k-l5122@peoplepc.com

Plan Review #: 15-008A
Project: Site Plan (Lady Lake Crossings)
Location: Lady Lake
Address of Job: Hwy 441/27 & Fennell Blvd
Pages: 17

Review For: SRK Lady Lake 43 Assoc, LLC
Contact: Martin Dellebovi
Telephone: 716-833-4986
Architect: Cuhaci & Peterson
Telephone: 407-661-9100

February 23, 2015

I have received and reviewed the site plans for the construction of 4 retail spaces under 2 building sites with mercantile occupancies for compliance with the Florida Fire Prevention Code, Lady Lake Land Development Code and any other applicable codes, standards, rules, and statutes. Comments pertaining to this review are noted below in bold. Comment number 3, 5, and 7 shall be addressed in letter format to receive approval to move forward. Should anyone feel comments are not enforceable, he or she shall contact this authority to resolve before permit is issued.

1. Ensure all language within notes on any page refer to the correct authority. This authority only reviewed applicable parts of the plan with regards to life safety. On page C1.0, Potable Water section, Item 1, change language that states pressure tests to be in accordance to the Town of Lady Lake and/or the authority having jurisdiction. **Plans have been revised to reflect Town of Lady Lake. Comment satisfied.**
2. Page C2.1 and C4.0 are inconsistent with Retail Number 3. Please correct. **Plans have been corrected to show a total of 4 retail spaces. Comment satisfied.**
3. The project submitted appears to meet the fire flow (1000 gpm's at 20 psi residual based on each retail having a fire sprinkler system) per NFPA 1, Table 18.4.5.1.2. The fire flow however, shall be maintained for a minimum of 2 hours. A fire flow test shall be completed from the closest hydrant to the project and documentation shall be submitted to this authority showing compliance. **Architect advised a hydrant flow test has been requested and will be provided to this authority once completed. This will be allowed providing contractor acknowledges if additional water flow is required due to an in adequate fire flow test, additional hydrants and/or water flow will be added. Comment will be satisfied once receiving acknowledgement.**
4. Hydrant spacing shall be at 500' in and around the complex as a vehicle would drive. Show an overall site of all hydrants with existing and new. Further, when spacing hydrants remember their proximity to the fire department connections associated with the fire sprinkler system of each building. Rule of thumb is 150 feet between the hydrant and FDC. FDC's may be on the building or standalone. Lady Lake LDC, NFPA 1 **Hydrant locations (based on revised plans) appear adequate for the retail spaces base on whether the buildings have or don't have a fire sprinkler system. Comment is satisfied at this time unless fire flow is inadequate.**
5. The installation of water mains and fire hydrants is part of the site work. Please include cut sheet and product information on all material used. This can be placed in the plans or as separate packet. Also on the installation plans of the water main, show all joints and size of pipe. NFPA 1 **Architect advised to see attached water flow package, however no water flow package was submitted to this authority to review. This package must be reviewed and approved prior to start of site construction. Architect shall acknowledge to satisfy comment.**

6. *A separate permit will be required for all underground associated with fire protection. Three sets of plans (stamped and sealed) shall be submitted and include all cut sheets, product material, and details. NFPA 1* ***Architect acknowledged, comment satisfied.***
7. Asphalt shall be striped, and signage shall be in place indicating no parking, fire lane for designated fire lane locations, hydrant locations, and FDC locations. Provide details on plans. See Chapter 18 of NFPA 1 Handbook for examples. **Striping and signage has been added to the plans at hydrant and FDC locations. There shall be access for emergency vehicles at the front of the building at front of buildings as well. There was no striping and signage added to the front of the retail centers (1 – 3). Retail space 4 does not require striping and signage, there is no designated space, as it is not typical of multi-tenant retail complex. Architect shall acknowledge signage and striping will be completed as required and "As Builds" can be submitted later showing change.**
8. *Ensure there is the minimum clearance to the sides (4') and the front (7.5') of the hydrants. NFPA 1, Chapter 18.* ***Notation was provided on the plans, comment satisfied.***
9. *Fire hydrants shall be color coded based on the flow tests obtained. Blue roadway reflectors shall also be installed indicating hydrant location.* ***Notation was provided on the plans, comment satisfied.***

Kerry Barnett

KERRY BARNETT, Fire Safety Inspector & Plans Examiner

***Please be advised this review of plans submitted is a cursory review to assist the contractor in compliance with applicable fire safety codes. This review is not intended to be a final approval of the submitted plans. It is the contractor's sole responsibility to ensure that the plans are in complete compliance with all applicable NFPA codes State Statutes and local ordinances. In the event that further examination or site inspection reveals areas of non-compliance, it shall be the contractor's sole responsibility, at their sole expense to bring those areas in compliance. Kerry Barnett Fire Safety Consulting assumes no responsibility for the contractor's failure to be in compliance with all applicable NFPA codes, State Statutes and local ordinances.

Wendy Then

From: Dallas Foss <dfoss@usanova.com>
Sent: Monday, January 26, 2015 7:51 PM
To: Wendy Then
Subject: Lady Lake Crossing

No comments on submutted site plan. Appears all ADA requirements are in compliance.

Dallas Foss
Town of Lady Lake
Building Official

Sent from Samsung RUGBY® Smart.

Wendy Then

From: Thad Carroll
Sent: Wednesday, February 04, 2015 9:15 AM
To: Wendy Then
Subject: FW: Confirmation

From: Marcondes, Olga [mailto:omarcondes@lakecountyfl.gov]
Sent: Tuesday, January 27, 2015 1:27 PM
To: Thad Carroll
Cc: Franco, Francis
Subject: RE: Confirmation

Good Afternoon Thad;

As discussed yesterday, the MPO is in agreement with the Town staff on waiving the requirement for a full traffic impact study for the "Lady Lake Crossing East" The submitted traffic analysis provided by Kimley Horn dated January 23, 2015 will be sufficient for the MPO to review and to be able to reserve those trips onto our database.

Regards,

Olga V. Marcondes
Transportation Planner

LAKE~SUMTER MPO
1616 South 14th Street
Leesburg, Florida 34748
Ph: (352) 315-0170
Fx: (352) 315-0993

www.LakeSumterMPO.com

"Promoting Regional Transportation Partnerships."

Go Green: Please do not print this e-mail unless you really need to.

From: Thad Carroll [mailto:tcarroll@ladylake.org]
Sent: Tuesday, January 27, 2015 10:54 AM
To: Marcondes, Olga
Subject: Confirmation

Olga,

Good morning. As discussed yesterday afternoon, can you confirm that the MPO is in agreement with Town Staff that the Benchmark Group will not be required to perform a full traffic study for the "Lady Lake Crossings East" development project, which currently is under site plan review by the Town of Lady Lake? Based upon our understanding, the

materials regarding traffic generation as submitted by Amber Gartner will be sufficient to advance the site plan as proposed. Can you confirm? Thanks again.

Sincerely,

Thad Carroll, AICP, LEED Green Associate
Growth Management Director
Town of Lady Lake
(352) 751-1521
tcarroll@ladylake.org

Note: The Growth Management Department's office hours are Monday - Thursday 7:30 am - 6:00 pm

Fla. Stat. 668.6076 "Under Florida law, e-mail addresses are public records. If you do not want your e-mail address released in response to a public-records request, do not send electronic mail to this entity. Instead, contact this office by phone or in writing."

Wendy Then

From: Butch Goodman <bgoodman@LadyLakePW.org>
Sent: Thursday, February 19, 2015 3:37 PM
To: Robert.Spence@kimley-horn.com
Cc: Wendy Then
Subject: FW: Lady Lake Crossing Buildings 1,2,3 and Out Parcel Building # 3
Attachments: 20150205_111036.pdf

L.D.Rs = Land Development Regulations, E.R.U = Equivalent Residential Unit Determination 1 E.R.U = 250 gallons a day
Per the L.D.Rs Building # 1 = 7 E.R.Us = 1,750 G.P.D Building # 2 = 3 E.R.Us = 750 G.P.D Building # 3 = 3 E.R.Us = 750 G.P.D

Out Parcel Building # 3 = 2 E.R.Us = 500 G.P.D

Please verify the Information as I have used the Building Usage and the Square footage provided on the prints to assign the E.R.Us per the L.D.Rs Note the actual G.P.D will be slightly different when the E.R.U including the decimal point is used, See att: Utility Quotes with hand notes.

Robert if you have any Questions let us know?

Thank you

Thomas " Butch" Goodman
Town of Lady Lake
Utilities Supervisor
136 Skyline Dr.
Lady Lake, Fl 32159
Phone: 352-751-1513
Fax: 352-751-1594
bgoodman@ladylakepw.org

ATTENTION: The new operating hours for the Public Works Department as of October 7th, 2013 will be Monday-Thursday, 7:00AM - 6:00PM. Offices will be closed on Friday's.
Please note: Under Florida law (Fla.Stat. 668.6076 - effect. 07-01-06), e-mail addresses are public records. If you do not want your e-mail address released in response to a public-records request, do not send electronic mail to this entity. Instead, contact this office by phone or in writing.

-----Original Message-----
From: Butch Goodman
Sent: Thursday, February 05, 2015 11:48 AM
To: 'Wendy Then'
Cc: C.T. Eagle
Subject: FW: Lady Lake Crossing Buildings 1,2,3 and Out Parcel Building # 3

Draft Utility Quotes for Lady Lake Crossing Buildings 1,2,3 and Out Parcel Building # 3 see att: need Reuse Calcs
Note: S.R.K has 7 Water and 7 Sewer E.R.Us remaining they have been placed on Building 1?

Thank you

Thomas " Butch" Goodman
Town of Lady Lake
Utilities Supervisor
136 Skyline Dr.
Lady Lake, Fl 32159
Phone: 352-751-1513
Fax: 352-751-1594
bgoodman@ladylakepw.org

ATTENTION: The new operating hours for the Public Works Department as of October 7th, 2013 will be Monday-Thursday, 7:00AM - 6:00PM. Offices will be closed on Friday's.
Please note: Under Florida law (Fla.Stat. 668.6076 - effect. 07-01-06), e-mail addresses are public records. If you do not want your e-mail address released in response to a public-records request, do not send electronic mail to this entity. Instead, contact this office by phone or in writing.

-----Original Message-----
From: Public Works [mailto:mfp6440@gmail.com]
Sent: Thursday, February 05, 2015 11:11 AM
To: Butch Goodman
Subject: Lady Lake Crossing Buildings 1,2,3 and Out Parcel Building # 3

Reply to: Public Works <psmith@ladylakepw.org> Device Name: Town Of Lady Lake Public Works Device Model: MX-2640N
Location: Lady Lake, FL

File Format: PDF (Medium)
Resolution: 200dpi x 200dpi

Attached file is scanned image in PDF format.
Use Acrobat(R)Reader(R) or Adobe(R)Reader(R) of Adobe Systems Incorporated to view the document.
Adobe(R)Reader(R) can be downloaded from the following URL:
Adobe, the Adobe logo, Acrobat, the Adobe PDF logo, and Reader are registered trademarks or trademarks of Adobe Systems Incorporated in the United States and other countries.

http://www.adobe.com/

Fla. Stat. 668.6076 "Under Florida law, e-mail addresses are public records. If you do not want your e-mail address released in response to a public-records request, do not send electronic mail to this entity. Instead, contact this office by phone or in writing."

Utility reserves the right to do site inspections and audits of said Water Facilities, Sewer Facilities, and Reuse Facilities at any given time without due notice to the Developer to determine if water, sewer, and reuse ERU allocations are correct. Based on the results of these audits and site inspections, Utility reserves the right to adjust amount of ERU allocations and assess applicable fees accordingly.

UTILITY QUOTE Residential ____ Commercial _X_ Irrigation ____ Reuse ____

Town of Lady Lake, 409 Fennell Boulevard, Lady Lake, Florida 32159 USA
Utility Customer Service (352) 751-1525 Public Works Administration (352) 751-1526

Project Name: Lady Lake Crossing East Legal Street Address: _____
Applicants Name: Martin J DelleBovi The Benchmark Group Phone Number: 716-833-4986
Notes: Building #1 Retail Commercial Business 31,961 Sq Ft.

*Residential and Commercial Properties are required to meet standard specifications set by the Town. Commercial Properties are required to purchase and install a RPZ or a dual check backflow device depending on field inspection. Commercial Properties are required to complete water & sewer taps and install meters. Commercial Properties are required to purchase and install a Neptune Radio Read Meter with a meter box and curb stops.

TOTAL NUMBER OF ERU's 7 (Per LDR's)

				REV. CODE
IS MUNICIPAL WATER AVAILABLE?		X Yes	____ No	
IS MUNICIPAL SEWER AVAILABLE?		X Yes	____ No	
IS MUNICIPAL REUSE AVAILABLE ?		X Yes	____ No	
WATER IMPACT FEES	7 ERU's	1,499.00 each		
		Commercial	$ 10,493.00- PAID	WI
		Residential	$ _____	WR
WATER TAP IN FEE	____ TAP w/5/8" meter	505.00 each	$ _____	WT
WATER DEPOSIT:				
Commercial Owner	7 ERU's	100.00 each	$ 700.00	PD
Contractor	____ ERU's	150.00 each	$ _____	PD
Residential Owner	____ ERU's	75.00 each	$ _____	PD
METER INSTALLATION	____ TBD	325.00 each	$ _____	WM
WATER TURN ON FEE	1 FEE	25.00 each	$ 25.00	WC
WATER INSPECTION FEE	1 FEE	50.00 each	$ 50.00	WF
JACK AND BORE:				
Cost Plus Overhead	____	350.00 *estimate*	$ _____	JB
SEWER IMPACT FEES	7 ERU's	3,172.00 each		
		Commercial	$ 22,204.00-PAID	SI
		Residential	$ _____	SR
SEWER TAP IN FEE: Cost Plus Overhead		500.00 minimum	$ _____	ST
SEWER DEPOSIT:				
Commercial Owner	7 ERU's	100.00 each	$ 700.00	PD
Contractor	____ ERU'S	150.00 each	$ _____	PD
Residential Owner	____ ERU's	75.00 each	$ _____	PD
SEWER INSPECTION	1 FEE	50.00 each	$ 50.00	4G
REUSE IMPACT FEES	____ ERU's	292.00 each		
		Commercial	$ _____	R7
		Residential	$ _____	R8
REUSE DEPOSIT:				
Commercial Owner	____ ERU's	100.00 each	$ _____	PD
Contractor	____ ERU's	150.00 each	$ _____	PD
Residential Owner	____ ERU's	75.00 each	$ _____	PD
METER INSTALLATION	____ TBD	325.00 each	$ _____	WM
REUSE CONNECTION FEE	____ FEE	25.00 each	$ _____	R9
REUSE INSPECTION FEE	____ FEE	50.00 each	$ _____	4R
JACK AND BORE:				
Cost Plus Overhead	____	350.00 *estimate*	$ _____	JB
		TOTAL BALANCE DUE	$ 1,525.00	

Quote expires 180 days Date: _____
Quote by: _____ Verified by: _____

DRAFT

Building # 1 31,961 Sq ft

Retail Commerical Business

Sq ft 31,961 — 2,500 sq ft = 1 ERU

- 2,500

29,461

÷ 5,000

= 5.89

Rounded UP = 6 ERUS

+ 1

= 7 Total ERUS Water Sewer

Need Avg Daily Flow

For Reuse Calcs = ERUS

UNIT DESIGNATION (CONT.) ERUs

16. SUPERMARKET

1 to 3 water fixtures---------- 1
Per 3 water fixtures thereafter---------- 1

17. COMMERCIAL BUSINESS

All non-residential, non-institutional and industrial establishments, but not limited to and without regard to whether they are profit or nonprofit organizations or retail and/or wholesale establishments; including stores, garages, cleaning establishments, for-hire services, and all other business required to obtain occupational licenses.

Per first 2500 square feet---------- 1
Per each additional 5000 square feet or part thereof---------- 1

18. OFFICE BUILDING

A building or portion of a building wherein services are performed involving predominately administrative, professional, or clerical operations.

For first 3,000 square feet---------- 1
For each additional 3000 square feet or part thereof---------- 1

19. NURSING/CONVALESCENT HOME/ASSISTED LIVING FACILITY

A home, institution, building or residence, public or private, whether operated for profit or not, presently licensed by the state, which provides maintenance, personal care or nursing for a period exceeding twenty-four hours to three or more ill, physically infirm, convalescing, or aged persons who are not related by blood or marriage to the operator. The definition of nursing or convalescent home does not include hospitals, clinics or similar institutions which are devoted primarily to the diagnosis and treatment of the sick or injured.

Per 20 bed capacity---------- 1
Additional for each 10 staff or segment thereof---------- 1

20. INDEPENDENT LIVING FACILITY

A facility offering individual, fully functional apartments for disabled or elderly residents in a community setting where meals may be shared and other social activities provided for individuals who want to enjoy a lifestyle filled with recreational, educational and social activities with others. These communities are designed for the disabled and elderly who are able to live on their own, but desire the security and conveniences of community living.

Living unit/apartment---------- 1

Utility reserves the right to do site inspections and audits of said Water Facilities, Sewer Facilities, and Reuse Facilities at any given time without due notice to the Developer to determine if water, sewer, and reuse ERU allocations are correct. Based on the results of these audits and site inspections, Utility reserves the right to adjust amount of ERU allocations and assess applicable fees accordingly.

UTILITY QUOTE Residential ____ Commercial _X_ Irrigation ____ Reuse ____

Town of Lady Lake, 409 Fennell Boulevard, Lady Lake, Florida 32159 USA
Utility Customer Service (352) 751-1525 Public Works Administration (352) 751-1526

Project Name: Lady Lake Crossing East Legal Street Address: _____
Applicants Name: Martin J DelleBovi The Benchmark Group Phone Number: 716-833-4986
Notes: Building #2 Retail Commercial Business 10,094 Sq. Ft.

*Residential and Commercial Properties are required to meet standard specifications set by the Town. Commercial Properties are required to purchase and install a RPZ or a dual check backflow device depending on field inspection. Commercial Properties are required to complete water & sewer taps and install meters. Commercial Properties are required to purchase and install a Neptune Radio Read Meter with a meter box and curb stops.

TOTAL NUMBER OF ERU's 3

					REV. CODE
IS MUNICIPAL WATER AVAILABLE?		X Yes	____ No		
IS MUNICIPAL SEWER AVAILABLE?		X Yes	____ No		
IS MUNICIPAL REUSE AVAILABLE ?		X Yes	____ No		
WATER IMPACT FEES	3 ERU's	1,499.00 each			
		Commercial		$ 4,497.00	WI
		Residential		$ _____	WR
WATER TAP IN FEE	____ TAP w/5/8" meter	505.00 each		$ _____	WT
WATER DEPOSIT:					
Commercial Owner	3 ERU's	100.00 each		$ 300.00	PD
Contractor	____ ERU's	150.00 each		$ _____	PD
Residential Owner	____ ERU's	75.00 each		$ _____	PD
METER INSTALLATION	____ TBD	325.00 each		$ _____	WM
WATER TURN ON FEE	1 FEE	25.00 each		$ 25.00	WC
WATER INSPECTION FEE	1 FEE	50.00 each		$ 50.00	WF
JACK AND BORE:					
Cost Plus Overhead	____	350.00 *estimate*		$ _____	JB
SEWER IMPACT FEES	3 ERU's	3,172.00 each			
		Commercial		$ 9,516.00	SI
		Residential		$ _____	SR
SEWER TAP IN FEE: Cost Plus Overhead		500.00 minimum		$ _____	ST
SEWER DEPOSIT:					
Commercial Owner	3 ERU's	100.00 each		$ 300.00	PD
Contractor	____ ERU'S	150.00 each		$ _____	PD
Residential Owner	____ ERU's	75.00 each		$ _____	PD
SEWER INSPECTION	1 FEE	50.00 each		$ 50.00	4G
REUSE IMPACT FEES	____ ERU's	292.00 each			
		Commercial		$ _____	R7
		Residential		$ _____	R8
REUSE DEPOSIT:					
Commercial Owner	____ ERU's	100.00 each		$ _____	PD
Contractor	____ ERU's	150.00 each		$ _____	PD
Residential Owner	____ ERU's	75.00 each		$ _____	PD
METER INSTALLATION	____ TBD	325.00 each		$ _____	WM
REUSE CONNECTION FEE	____ FEE	25.00 each		$ _____	R9
REUSE INSPECTION FEE	____ FEE	50.00 each		$ _____	4R
JACK AND BORE:					
Cost Plus Overhead	____	350.00 *estimate*		$ _____	JB
		TOTAL BALANCE DUE		$ 14,738.00	

Quote expires 180 days Date: _____
Quote by: _____ Verified by: _____

S:\QUOTES\QUOTES 2011-12 FY\UTILITY QUOTE FORM After June 24 2009 revised 11-2011.doc

DRAFT

Building # 2 10,094 Sq ft
Retail Commercial Business

Sq ft 10,094 − 2,500 Sq ft = 1 ERU
7,594 ÷ 5000 = 1.51
Rounded up = 2 ERUS

= 3 Total ERUS Water Sewer

Need Avg Daily Flow
For Reuse Calcs = ERUS

UNIT DESIGNATION (CONT.) **ERUs**

16. SUPERMARKET

1 to 3 water fixtures	1
Per 3 water fixtures thereafter	1

17. COMMERCIAL BUSINESS

All non-residential, non-institutional and industrial establishments, but not limited to and without regard to whether they are profit or nonprofit organizations or retail and/or wholesale establishments; including stores, garages, cleaning establishments, for-hire services, and all other business required to obtain occupational licenses.

Per first 2500 square feet	1
Per each additional 5000 square feet or part thereof	1

18. OFFICE BUILDING

A building or portion of a building wherein services are performed involving predominately administrative, professional, or clerical operations.

For first 3,000 square feet	1
For each additional 3000 square feet or part thereof	1

19. NURSING/CONVALESCENT HOME/ASSISTED LIVING FACILITY

A home, institution, building or residence, public or private, whether operated for profit or not, presently licensed by the state, which provides maintenance, personal care or nursing for a period exceeding twenty-four hours to three or more ill, physically infirm, convalescing, or aged persons who are not related by blood or marriage to the operator. The definition of nursing or convalescent home does not include hospitals, clinics or similar institutions which are devoted primarily to the diagnosis and treatment of the sick or injured.

Per 20 bed capacity	1
Additional for each 10 staff or segment thereof	1

20. INDEPENDENT LIVING FACILITY

A facility offering individual, fully functional apartments for disabled or elderly residents in a community setting where meals may be shared and other social activities provided for individuals who want to enjoy a lifestyle filled with recreational, educational and social activities with others. These communities are designed for the disabled and elderly who are able to live on their own, but desire the security and conveniences of community living.

Living unit/apartment	1

Utility reserves the right to do site inspections and audits of said Water Facilities, Sewer Facilities, and Reuse Facilities at any given time without due notice to the Developer to determine if water, sewer, and reuse ERU allocations are correct. Based on the results of these audits and site inspections, Utility reserves the right to adjust amount of ERU allocations and assess applicable fees accordingly.

UTILITY QUOTE Residential ____ Commercial _X_ Irrigation ____ Reuse ____

Town of Lady Lake, 409 Fennell Boulevard, Lady Lake, Florida 32159 USA
Utility Customer Service (352) 751-1525 Public Works Administration (352) 751-1526

Project Name: Lady Lake Crossing East Legal Street Address: _____
Applicants Name: Martin J DelleBovi The Benchmark Group Phone Number: 716-833-4986
Notes: Building #3 Retail Commercial Business 8,727 Sq. Ft.

*Residential and Commercial Properties are required to meet standard specifications set by the Town. Commercial Properties are required to purchase and install a RPZ or a dual check backflow device depending on field inspection. Commercial Properties are required to complete water & sewer taps and install meters. Commercial Properties are required to purchase and install a Neptune Radio Read Meter with a meter box and curb stops.

TOTAL NUMBER OF ERU's _3_

					REV. CODE
IS MUNICIPAL WATER AVAILABLE?			_X_ Yes	____ No	
IS MUNICIPAL SEWER AVAILABLE?			_X_ Yes	____ No	
IS MUNICIPAL REUSE AVAILABLE ?			_X_ Yes	____ No	
WATER IMPACT FEES	_3_ ERU's	1,499.00 each			
		Commercial		$ 4,497.00	WI
		Residential		$ _____	WR
WATER TAP IN FEE	____ TAP w/5/8" meter	505.00 each		$ _____	WT
WATER DEPOSIT:					
Commercial Owner	_3_ ERU's	100.00 each		$ 300.00	PD
Contractor	____ ERU's	150.00 each		$ _____	PD
Residential Owner	____ ERU's	75.00 each		$ _____	PD
METER INSTALLATION	____ TBD	325.00 each		$ _____	WM
WATER TURN ON FEE	_1_ FEE	25.00 each		$ 25.00	WC
WATER INSPECTION FEE	_1_ FEE	50.00 each		$ 50.00	WF
JACK AND BORE:					
Cost Plus Overhead	____	350.00 *estimate*		$ _____	JB
SEWER IMPACT FEES	_3_ ERU's	3,172.00 each			
		Commercial		$ 9,516.00	SI
		Residential		$ _____	SR
SEWER TAP IN FEE: Cost Plus Overhead		500.00 minimum		$ _____	ST
SEWER DEPOSIT:					
Commercial Owner	_3_ ERU's	100.00 each		$ 300.00	PD
Contractor	____ ERU'S	150.00 each		$ _____	PD
Residential Owner	____ ERU's	75.00 each		$ _____	PD
SEWER INSPECTION	_1_ FEE	50.00 each		$ 50.00	4G
REUSE IMPACT FEES	____ ERU's	292.00 each			
		Commercial		$ _____	R7
		Residential		$ _____	R8
REUSE DEPOSIT:					
Commercial Owner	____ ERU's	100.00 each		$ _____	PD
Contractor	____ ERU's	150.00 each		$ _____	PD
Residential Owner	____ ERU's	75.00 each		$ _____	PD
METER INSTALLATION	____ TBD	325.00 each		$ _____	WM
REUSE CONNECTION FEE	____ FEE	25.00 each		$ _____	R9
REUSE INSPECTION FEE	____ FEE	50.00 each		$ _____	4R
JACK AND BORE:					
Cost Plus Overhead	____	350.00 *estimate*		$ _____	JB
		TOTAL BALANCE DUE		$ 14,738.00	

Quote expires 180 days Date: _____
Quote by: _____ Verified by: _____

DRAFT

16. SUPERMARKET

1 to 3 water fixtures	1
Per 3 water fixtures thereafter	1

17. COMMERCIAL BUSINESS

All non-residential, non-institutional and industrial establishments, but not limited to and without regard to whether they are profit or nonprofit organizations or retail and/or wholesale establishments; including stores, garages, cleaning establishments, for-hire services, and all other business required to obtain occupational licenses.

Per first 2500 square feet	1
Per each additional 5000 square feet or part thereof	1

18. OFFICE BUILDING

A building or portion of a building wherein services are performed involving predominately administrative, professional, or clerical operations.

For first 3,000 square feet	1
For each additional 3000 square feet or part thereof	1

19. NURSING/CONVALESCENT HOME/ASSISTED LIVING FACILITY

A home, institution, building or residence, public or private, whether operated for profit or not, presently licensed by the state, which provides maintenance, personal care or nursing for a period exceeding twenty-four hours to three or more ill, physically infirm, convalescing, or aged persons who are not related by blood or marriage to the operator. The definition of nursing or convalescent home does not include hospitals, clinics or similar institutions which are devoted primarily to the diagnosis and treatment of the sick or injured.

Per 20 bed capacity	1
Additional for each 10 staff or segment thereof	1

20. INDEPENDENT LIVING FACILITY

A facility offering individual, fully functional apartments for disabled or elderly residents in a community setting where meals may be shared and other social activities provided for individuals who want to enjoy a lifestyle filled with recreational, educational and social activities with others. These communities are designed for the disabled and elderly who are able to live on their own, but desire the security and conveniences of community living.

Living unit/apartment	1

Building # 3 8,727 Sq ft
Retail Commercial Business

Sq ft 8,727 - 2,500 Sq ft = 1 ERU
6,227 ÷ 5,000 Sq ft = 1.24 = 2 Rounded UP

1 ERU + 2 ERU = 3 Total ERUS
Water Sewer

Need Avg Daily Flow
For Reuse Sales = ERUS

Utility reserves the right to do site inspections and audits of said Water Facilities, Sewer Facilities, and Reuse Facilities at any given time without due notice to the Developer to determine if water, sewer, and reuse ERU allocations are correct. Based on the results of these audits and site inspections, Utility reserves the right to adjust amount of ERU allocations and assess applicable fees accordingly.

UTILITY QUOTE Residential ____ Commercial _X_ Irrigation ____ Reuse ____

Town of Lady Lake, 409 Fennell Boulevard, Lady Lake, Florida 32159 USA
Utility Customer Service (352) 751-1525 Public Works Administration (352) 751-1526

Project Name: Lady Lake Crossing East Legal Street Address: _____
Applicants Name: Martin J DelleBovi The Benchmark Group Phone Number: 716-833-4986
Notes: Out Parcel Building #3 Retail Commercial Business 4000 Sq Ft.

*Residential and Commercial Properties are required to meet standard specifications set by the Town. Commercial Properties are required to purchase and install a RPZ or a dual check backflow device depending on field inspection. Commercial Properties are required to complete water & sewer taps and install meters. Commercial Properties are required to purchase and install a Neptune Radio Read Meter with a meter box and curb stops.

TOTAL NUMBER OF ERU's 2

					REV. CODE
IS MUNICIPAL WATER AVAILABLE?		X Yes	____ No		
IS MUNICIPAL SEWER AVAILABLE?		X Yes	____ No		
IS MUNICIPAL REUSE AVAILABLE ?		X Yes	____ No		
WATER IMPACT FEES	2 ERU's	1,499.00 each			
		Commercial		$ 2,998.00	WI
		Residential		$ ____	WR
WATER TAP IN FEE	____ TAP w/5/8" meter	505.00 each		$ ____	WT
WATER DEPOSIT:					
Commercial Owner	2 ERU's	100.00 each		$ 200.00	PD
Contractor	____ ERU's	150.00 each		$ ____	PD
Residential Owner	____ ERU's	75.00 each		$ ____	PD
METER INSTALLATION	____ TBD	325.00 each		$ ____	WM
WATER TURN ON FEE	1 FEE	25.00 each		$ 25.00	WC
WATER INSPECTION FEE	1 FEE	50.00 each		$ 50.00	WF
JACK AND BORE:					
Cost Plus Overhead	____	350.00 *estimate*		$ ____	JB
SEWER IMPACT FEES	2 ERU's	3,172.00 each			
		Commercial		$ 6,344.00	SI
		Residential		$ ____	SR
SEWER TAP IN FEE: Cost Plus Overhead		500.00 minimum		$ ____	ST
SEWER DEPOSIT:					
Commercial Owner	2 ERU's	100.00 each		$ 200.00	PD
Contractor	____ ERU'S	150.00 each		$ ____	PD
Residential Owner	____ ERU's	75.00 each		$ ____	PD
SEWER INSPECTION	1 FEE	50.00 each		$ 50.00	4G
REUSE IMPACT FEES	____ ERU's	292.00 each			
		Commercial		$ ____	R7
		Residential		$ ____	R8
REUSE DEPOSIT:					
Commercial Owner	____ ERU's	100.00 each		$ ____	PD
Contractor	____ ERU's	150.00 each		$ ____	PD
Residential Owner	____ ERU's	75.00 each		$ ____	PD
METER INSTALLATION	____ TBD	325.00 each		$ ____	WM
REUSE CONNECTION FEE	____ FEE	25.00 each		$ ____	R9
REUSE INSPECTION FEE	____ FEE	50.00 each		$ ____	4R
JACK AND BORE:					
Cost Plus Overhead	____	350.00 *estimate*		$ ____	JB
		TOTAL BALANCE DUE		$ 9,876.00	

Quote expires 180 days Date: _____
Quote by: _____ Verified by: _____

S:\QUOTES\QUOTES 2011-12 FY\UTILITY QUOTE FORM After June 24 2009 revised 11-2011.doc

DRAFT

UNIT DESIGNATION (CONT.) **ERUs**

16. SUPERMARKET

1 to 3 water fixtures---------- 1
Per 3 water fixtures thereafter---------- 1

17. COMMERCIAL BUSINESS

All non-residential, non-institutional and industrial establishments, but not limited to and without regard to whether they are profit or nonprofit organizations or retail and/or wholesale establishments; including stores, garages, cleaning establishments, for-hire services, and all other business required to obtain occupational licenses.

Per first 2500 square feet---------- 1
Per each additional 5000 square feet or part thereof---------- 1

18. OFFICE BUILDING

A building or portion of a building wherein services are performed involving predominately administrative, professional, or clerical operations.

For first 3,000 square feet---------- 1
For each additional 3000 square feet or part thereof---------- 1

19. NURSING/CONVALESCENT HOME/ASSISTED LIVING FACILITY

A home, institution, building or residence, public or private, whether operated for profit or not, presently licensed by the state, which provides maintenance, personal care or nursing for a period exceeding twenty-four hours to three or more ill, physically infirm, convalescing, or aged persons who are not related by blood or marriage to the operator. The definition of nursing or convalescent home does not include hospitals, clinics or similar institutions which are devoted primarily to the diagnosis and treatment of the sick or injured.

Per 20 bed capacity---------- 1
Additional for each 10 staff or segment thereof---------- 1

20. INDEPENDENT LIVING FACILITY

A facility offering individual, fully functional apartments for disabled or elderly residents in a community setting where meals may be shared and other social activities provided for individuals who want to enjoy a lifestyle filled with recreational, educational and social activities with others. These communities are designed for the disabled and elderly who are able to live on their own, but desire the security and conveniences of community living.

Living unit/apartment---------- 1

Out Parcel Building #3

4,000 Sq ft Retail Commercial/Business

Sq ft 4000 - 2500 Sq ft = 1 ERU
1,500 ÷ 5000 0.3 = 1 ERU Rounded up
ERU ERU
1 + 1 = 2 ERUS Water
Sewer

Need Avg Daily Flow
For Rate Calcs = ERUS

St. Johns River
Water Management District
Hans G. Tanzler III, Executive Director

4049 Reid Street • P.O. Box 1429 • Palatka, FL 32178-1429 • (386) 329-4500
On the Internet at floridaswater.com.

February 19, 2015

SRK Lady Lake 43 Associates LLC
Ste 200
4053 Maple Rd
Amherst, NY 14226-1058

Re: Lady Lake Crossing
Letter Modification Number 106359-13
(Please reference the above number on any submittal)

The St. Johns River Water Management District is in receipt of your request for letter modification to Permit Number 106359-9. Based upon staff review of the information you submitted, the proposed modification qualifies for a letter modification pursuant to 40C-4.331(1)(b), Florida Administrative Code (F.A.C.). A copy of the modified permit is enclosed for your records.

Please be advised that the District has not published a notice in the newspaper to advise the public that it is issuing this letter of modification. If you do not publish a notice in the newspaper, a party's right to challenge the issuance of this letter modification extends for an indefinite period of time. If you wish to have certainty that the period of filing such a challenge is closed, then you may publish, at your own expense, such a notice in a newspaper of general circulation within the area that includes the project to which the modification applies. A copy of the form of the notice is attached for your use. If you have any questions, please contact Susan Davis at (407) 659-4838 or Sandra Joiner at (407) 659-4871

Sincerely,

M. Daniels

Margaret Daniels, Bureau Chief
Bureau of Regulatory Support

cc: District Permit File

GOVERNING BOARD

John A. Miklos, CHAIRMAN ORLANDO | Fred N. Roberts Jr., VICE CHAIRMAN OCALA | Chuck Drake, SECRETARY ORLANDO | Carla Yetter, TREASURER FERNANDINA BEACH

ST. JOHNS RIVER WATER MANAGEMENT DISTRICT
Post Office Box 1429
Palatka, Florida 32178-1429

PERMIT NO: 106359-13 **DATE ISSUED:** February 19, 2015

PROJECT NAME: Lady Lake Crossing

A PERMIT AUTHORIZING:

Modification by letter of Permit No. 40-069-106359-9 for Village Crossroads at Lady Lake Pond Modification to include the construction and operation of a 7.71 - acre project known as Lady Lake Crossing, as per plans received by the District on January 27, 2015.

LOCATION:

SECTION(S): 8, 17 TOWNSHIP(S): 18S RANGE(S): 24E
Lake Counties

ISSUED TO:

SRK Lady Lake 43 Associates LLC
Ste 200
4053 Maple Rd
Amherst, NY 14226-1058

The permittee agrees to hold and save the St. Johns River Water Management District and its successors harmless from any and all damages, claims, or liabilities which may arise from permit issuance. Said application, including all plans and specifications attached thereto, is by reference made a part hereof.

This permit does not convey to the permittee any property rights nor any rights or privileges other than those specified herein, nor relieve the permittee from complying with any law, regulation or requirement affecting the rights of other bodies or agencies. All structures and works installed by permittee hereunder shall remain the property of the permittee.

This permit may be revoked, modified or transferred at any time pursuant to the appropriate provisions of Chapter 373, Florida Statutes.

PERMIT IS CONDITIONED UPON:
See conditions on attached "Exhibit A", dated February 19, 2015

AUTHORIZED BY: St. Johns River Water Management District
Division of Regulatory, Engineering and Environmental Services

By: David Dewey

David Dewey
Service Center Director

"EXHIBIT A"
CONDITIONS FOR ISSUANCE OF PERMIT NUMBER 106359-13
SRK Lady Lake 43 Associates LLC, Steven J Longo
DATE ISSUED February 19, 2015

1. All activities shall be implemented as set forth in the plans, specifications and performance criteria as approved by this permit. Any deviation from the permitted activity and the conditions for undertaking that activity shall constitute a violation of this permit.

2. This permit or a copy thereof, complete with all conditions, attachments, exhibits, and modifications, shall be kept at the work site of the permitted activity. The complete permit shall be available for review at the work site upon request by District staff. The permittee shall require the contractor to review the complete permit prior to commencement of the activity authorized by this permit.

3. Activities approved by this permit shall be conducted in a manner which do not cause violations of state water quality standards.

4. Prior to and during construction, the permittee shall implement and maintain all erosion and sediment control measures (best management practices) required to retain sediment on-site and to prevent violations of state water quality standards. All practices must be in accordance with the guidelines and specifications in chapter 6 of the Florida Land Development Manual: A Guide to Sound Land and Water Management (Florida Department of Environmental Regulation 1988), which are incorporated by reference, unless a project specific erosion and sediment control plan is approved as part of the permit, in which case the practices must be in accordance with the plan. If site specific conditions require additional measures during any phase of construction or operation to prevent erosion or control sediment, beyond those specified in the erosion and sediment control plan, the permittee shall implement additional best management practices as necessary, in accordance with the specifications in chapter 6 of the Florida Land Development Manual: A Guide to Sound Land and Water Management (Florida Department of Environmental Regulation 1988). The permittee shall correct any erosion or shoaling that causes adverse impacts to the water resources.

5. Stabilization measures shall be initiated for erosion and sediment control on disturbed areas as soon as practicable in portions of the site where construction activities have temporarily or permanently ceased, but in no case more than 7 days after the construction activity in that portion of the site has temporarily or permanently ceased.

6. At least 48 hours prior to commencement of activity authorized by this permit, the permittee shall submit to the District a Construction Commencement Notice Form No. 40C-4.900(3) indicating the actual start date and the expected completion date.

7. When the duration of construction will exceed one year, the permittee shall submit construction status reports to the District on an annual basis utilizing an Annual Status Report Form No. 40C-4.900(4). These forms shall be submitted during June of each year.

8. For those systems which will be operated or maintained by an entity which will require an easement or deed restriction in order to provide that entity with the authority necessary to operate or maintain the system, such easement or deed restriction, together with any other final operation or maintenance documents as are required by subsections 7.1.1 through 7.1.4 of the Applicant's Handbook: Management and Storage of Surface Waters, must be submitted to the District for approval. Documents meeting the requirements set forth in these subsections of the Applicant's Handbook will be approved. Deed restrictions,

easements and other operation and maintenance documents which require recordation either with the Secretary of State or the Clerk of the Circuit Court must be so recorded prior to lot or unit sales within the project served by the system, or upon completion of construction of the system, whichever occurs first. For those systems which are proposed to be maintained by county or municipal entities, final operation and maintenance documents must be received by the District when maintenance and operation of the system is accepted by the local governmental entity. Failure to submit the appropriate final documents referenced in this paragraph will result in the permittee remaining liable for carrying out maintenance and operation of the permitted system.

9. Each phase or independent portion of the permitted system must be completed in accordance with the permitted plans and permit conditions prior to the initiation of the permitted use of site infrastructure located within the area served by the portion or phase of the system. Each phase or independent portion of the system must be completed in accordance with the permitted plans and permit conditions prior to transfer of responsibility for operation and maintenance of that phase or portion of the system to local government or other responsible entity.

10. Within 30 days after completion of construction of the permitted system, or independent portion of the system, the permittee shall submit a written statement of completion and certification by a registered professional engineer or other appropriate individual as authorized by law, utilizing As Built Certification Form 40C-1.181(13) or 40C-1.181(14) supplied with this permit. When the completed system differs substantially from the permitted plans, any substantial deviations shall be noted and explained and one copy of as-built drawings submitted to the District. Submittal of the completed form shall serve to notify the District that the system is ready for inspection. The statement of completion and certification shall be based on on-site observation of construction (conducted by the registered professional engineer, or other appropriate individual as authorized by law, or under his or her direct supervision) or review of as-built drawings for the purpose of determining if the work was completed in compliance with approved plans and specifications. As-built drawings shall be the permitted drawings revised to reflect any changes made during construction. Both the original and any revised specifications must be clearly shown. The plans must be clearly labeled as "as-built" or "record" drawing. All surveyed dimensions and elevations shall be certified by a registered surveyor. The following information, at a minimum, shall be verified on the as-built drawings: 1. Dimensions and elevations of all discharge structures including all weirs, slots, gates, pumps, pipes, and oil and grease skimmers; 2. Locations, dimensions, and elevations of all filter, exfiltration, or underdrain systems including cleanouts, pipes, connections to control structures, and points of discharge to the receiving waters; 3. Dimensions, elevations, contours, or cross-sections of all treatment storage areas sufficient to determine state-storage relationships of the storage area and the permanent pool depth and volume below the control elevation for normally wet systems, when appropriate; 4. Dimensions, elevations, contours, final grades, or cross-sections of the system to determine flow directions and conveyance of runoff to the treatment system; 5. Dimensions, elevations, contours, final grades, or cross-sections of all conveyance systems utilized to convey off-site runoff around the system; 6. Existing water elevation(s) and the date determined; and Elevation and location of benchmark(s) for the survey.

11. The operation phase of this permit shall not become effective until the permittee has submitted the appropriate As-Built Certification Form, the District determines the system to be in compliance with the permitted plans, and the entity approved by the District in accordance with subsections 7.1.1 through 7.1.4 of the Applicant's Handbook: Management and Storage of Surface Waters, accepts responsibility for operation and maintenance of the system. The permit may not be transferred to such an approved operation and maintenance entity until the operation phase of the permit becomes effective. Following inspection and approval of the permitted system by the District, the

permittee shall request transfer of the permit to the responsible approved operation and maintenance entity, if different from the permittee. Until the permit is transferred pursuant to section 7.1 of the Applicant's Handbook: Management and Storage of Surface Waters, the permittee shall be liable for compliance with the terms of the permit.

12. Should any other regulatory agency require changes to the permitted system, the permittee shall provide written notification to the District of the changes prior implementation so that a determination can be made whether a permit modification is required.

13. This permit does not eliminate the necessity to obtain any required federal, state, local and special district authorizations prior to the start of any activity approved by this permit. This permit does not convey to the permittee or create in the permittee any property right, or any interest in real property, nor does it authorize any entrance upon or activities on property which is not owned or controlled by the permittee, or convey any rights or privileges other than those specified in the permit and chapter 40C-4 or chapter 40C-40, F.A.C.

14. The permittee shall hold and save the District harmless from any and all damages, claims, or liabilities which may arise by reason of the activities authorized by the permit or any use of the permitted system.

15. Any delineation of the extent of a wetland or other surface water submitted as part of the permit application, including plans or other supporting documentation, shall not be considered specifically approved unless a specific condition of this permit or a formal determination under rule 40C-1.1006, F.A.C., provides otherwise.

16. The permittee shall notify the District in writing within 30 days of any sale, conveyance, or other transfer of ownership or control of the permitted system or the real property at which the permitted system is located. All transfers of ownership or transfers of a permit are subject to the requirements of rule 40C-1.612, F.A.C. The permittee transferring the permit shall remain liable for any corrective actions that may be required as a result of any permit violations prior to such sale, conveyance or other transfer.

17. Upon reasonable notice to the permittee, District authorized staff with proper identification shall have permission to enter, inspect, sample and test the system to insure conformity with the plans and specifications approved by the permit.

18. If historical or archaeological artifacts are discovered at any time on the project site, the permittee shall immediately notify the District.

19. All wetland areas or water bodies that are outside the specific limits of construction authorized by this permit must be protected from erosion, siltation, scouring or excess turbidity, and dewatering.

20. Prior to construction, the permittee must clearly designate the limits of construction on-site. The permittee must advise the contractor that any work outside the limits of construction, including clearing, may be a violation of this permit.

21. The proposed project shall be constructed and operated in accordance with the plans received by the District on January 27, 2015.

22. This permit for construction will expire two years from the date of issuance.

Notice Of Rights

1. A person whose substantial interests are or may be affected has the right to request an administrative hearing by filing a written petition with the St. Johns River Water Management District (District). Pursuant to Chapter 28-106 and Rule 40C-1.1007, Florida Administrative Code, the petition must be filed (received) either by delivery at the office of the District Clerk at District Headquarters, P. O. Box 1429, Palatka Florida 32178-1429 (4049 Reid St., Palatka, FL 32177) or by e-mail with the District Clerk at Clerk@sjrwmd.com, within twenty-six (26) days of the District depositing the notice of District decision in the mail (for those persons to whom the District mails actual notice), within twenty-one (21) days of the District emailing the notice of District decision (for those persons to whom the District emails actual notice), or within twenty-one (21) days of newspaper publication of the notice of District decision (for those persons to whom the District does not mail or email actual notice). A petition must comply with Sections 120.54(5)(b)4. and 120.569(2)(c), Florida Statutes, and Chapter 28-106, Florida Administrative Code. The District will not accept a petition sent by facsimile (fax), as explained in paragraph no. 4 below.

2. Please be advised that if you wish to dispute this District decision, mediation may be available and that choosing mediation does not affect your right to an administrative hearing. If you wish to request mediation, you must do so in a timely-filed petition. If all parties, including the District, agree to the details of the mediation procedure, in writing, within 10 days after the time period stated in the announcement for election of an administrative remedy under Sections 120.569 and 120.57, Florida Statutes, the time limitations imposed by Sections 120.569 and 120.57, Florida Statutes, shall be tolled to allow mediation of the disputed District decision. The mediation must be concluded within 60 days of the date of the parties' written agreement, or such other timeframe agreed to by the parties in writing. Any mediation agreement must include provisions for selecting a mediator, a statement that each party shall be responsible for paying its pro-rata share of the costs and fees associated with mediation, and the mediating parties' understanding regarding the confidentiality of discussions and documents introduced during mediation. If mediation results in settlement of the administrative dispute, the District will enter a final order consistent with the settlement agreement. If mediation terminates without settlement of the dispute, the District will notify all the parties in writing that the administrative hearing process under Sections 120.569 and 120.57, Florida Statutes, is resumed. Even if a party chooses not to engage in formal mediation, or if formal mediation does not result in a settlement agreement, the District will remain willing to engage in informal settlement discussions.

3. A person whose substantial interests are or may be affected has the right to an informal administrative hearing pursuant to Sections 120.569 and 120.57(2), Florida Statutes, where no material facts are in dispute. A petition for an informal hearing must also comply with the requirements set forth in Rule 28-106.301, Florida Administrative Code.

Notice Of Rights

4. A petition for an administrative hearing is deemed filed upon receipt of the complete petition by the District Clerk at the District Headquarters in Palatka, Florida during the District's regular business hours. The District's regular business hours are 8:00 a.m. – 5:00 p.m., excluding weekends and District holidays. Petitions received by the District Clerk after the District's regular business hours shall be deemed filed as of 8:00 a.m. on the District's next regular business day. The District's acceptance of petitions filed by e-mail is subject to certain conditions set forth in the District's Statement of Agency Organization and Operation (issued pursuant to Rule 28-101.001, Florida Administrative Code), which is available for viewing at floridaswater.com. These conditions include, but are not limited to, the petition being in the form of a PDF or TIFF file and being capable of being stored and printed by the District. Further, pursuant to the District's Statement of Agency Organization and Operation, attempting to file a petition by facsimile is prohibited and shall not constitute filing.

5. Failure to file a petition for an administrative hearing within the requisite timeframe shall constitute a waiver of the right to an administrative hearing. (Rule 28-106.111, Florida Administrative Code).

6. The right to an administrative hearing and the relevant procedures to be followed are governed by Chapter 120, Florida Statutes, Chapter 28-106, Florida Administrative Code, and Rule 40C-1.1007, Florida Administrative Code. Because the administrative hearing process is designed to formulate final agency action, the filing of a petition means the District's final action may be different from the position taken by it in this notice. A person whose substantial interests are or may be affected by the District's final action has the right to become a party to the proceeding, in accordance with the requirements set forth above.

7. Pursuant to Section 120.68, Florida Statutes, a party to the proceeding before the District who is adversely affected by final District action may seek review of the action in the District Court of Appeal by filing a notice of appeal pursuant to Rules 9.110 and 9.190, Florida Rules of Appellate Procedure, within 30 days of the rendering of the final District action.

8. A District action is considered rendered, as referred to in paragraph no. 7 above, after it is signed on behalf of the District and filed by the District Clerk.

9. Failure to observe the relevant timeframes for filing a petition for judicial review as described in paragraph no. 7 above will result in waiver of that right to review.

Notice Of Rights

Certificate of Service

I HEREBY CERTIFY that a copy of the foregoing Notice of Rights has been sent to the permittee:

SRK Lady Lake 43 Associates LLC
Ste 200
4053 Maple Rd
Amherst, NY 14226-1058

This 19th day of February, 2015.

M. Daniels

Margaret Daniels, Bureau Chief
Bureau of Regulatory Support
St. Johns River Water Management District
4049 Reid Street
Palatka, FL 32177-2529
(386) 329-4570

Permit Number: 106359-13

NOTICING INFORMATION

Dear Permittee:

Please be advised that the St. Johns River Water Management District will not publish a notice in the newspaper advising the public that it has issued a permit for this project.

Newspaper publication, using the District's notice form, notifies members of the public of their right to challenge the issuance of the permit. If proper notice is given by newspaper publication, then there is a 21-day time limit for someone to file a petition for an administrative hearing to challenge the issuance of the permit.

To close the point of entry for filing a petition, you may publish (at your own expense) a one-time notice of the District's decision in a newspaper of general circulation within the affected area as defined in Section 50.011 of the Florida Statutes. If you do not publish a newspaper notice to close the point of entry, the time to challenge the issuance of your permit will not expire and someone could file a petition even after your project is constructed.

A copy of the notice form and a partial list of newspapers of general circulation are attached for your convenience. However, you are not limited to those listed newspapers. If you choose to close the point of entry and the notice is published, the newspaper will return to you an affidavit of publication. In that event, it is important that you either submit a scanned copy of the affidavit by emailing it to *compliancesupport@sjrwmd.com* (preferred method) **or** send a copy of the original affidavit to:

Margaret Daniels, Bureau Chief
Bureau of Regulatory Support
4049 Reid Street
Palatka, FL 32177

If you have any questions, please contact the Bureau of Regulatory Support at (386) 329-4570.

Sincerely,

M. Daniels

Margaret Daniels, Bureau Chief

Bureau of Regulatory Support

NOTICE OF AGENCY ACTION TAKEN BY THE
ST. JOHNS RIVER WATER MANAGEMENT DISTRICT

Notice is given that the following permit was issued on _____:

(Name and address of applicant)_____
permit#_____. The project is located in _____County, Section _____, Township _____ South, Range _____ East. The permit authorizes a surface water management system on _____ acres for _____ known as _____. The receiving water body is _____.

A person whose substantial interests are or may be affected has the right to request an administrative hearing by filing a written petition with the St. Johns River Water Management District (District). Pursuant to Chapter 28-106 and Rule 40C-1.1007, Florida Administrative Code (F.A.C.), the petition must be filed (received) either by delivery at the office of the District Clerk at District Headquarters, P.O. Box 1429, Palatka FL 32178-1429 (4049 Reid St, Palatka, FL 32177) or by e-mail with the District Clerk at Clerk@sjrwmd.com, within twenty-one (21) days of newspaper publication of the notice of District decision (for those persons to whom the District does not mail or email actual notice). A petition must comply with Sections 120.54(5)(b)4. and 120.569(2)(c), Florida Statutes (F.S.), and Chapter 28-106, F.A.C. The District will not accept a petition sent by facsimile (fax). Mediation pursuant to Section 120.573, F.S., may be available and choosing mediation does not affect your right to an administrative hearing.

A petition for an administrative hearing is deemed filed upon receipt of the complete petition by the District Clerk at the District Headquarters in Palatka, Florida during the District's regular business hours. The District's regular business hours are 8 a.m. – 5 p.m., excluding weekends and District holidays. Petitions received by the District Clerk after the District's regular business hours shall be deemed filed as of 8 a.m. on the District's next regular business day. The District's acceptance of petitions filed by e-mail is subject to certain conditions set forth in the District's Statement of Agency Organization and Operation (issued pursuant to Rule 28-101.001, Florida Administrative Code), which is available for viewing at floridaswater.com. These conditions include, but are not limited to, the petition being in the form of a PDF or TIFF file and being capable of being stored and printed by the District. Further, pursuant to the District's Statement of Agency Organization and Operation, attempting to file a petition by facsimile (fax) is prohibited and shall not constitute filing.

The right to an administrative hearing and the relevant procedures to be followed are governed by Chapter 120, Florida Statutes, Chapter 28-106, Florida Administrative Code, and Rule 40C-1.1007, Florida Administrative Code. Because the administrative hearing process is designed to formulate final agency action, the filing of a petition means the District's final action may be different from the position taken by it in this notice. **Failure to file a petition for an administrative hearing within the requisite time frame shall constitute a waiver of the right to an administrative hearing. (Rule 28-106.111, F.A.C.).**

If you wish to do so, please visit http://floridaswater.com/nor_dec/ to read the complete Notice of Rights to determine any legal rights you may have concerning the District's decision(s) on the permit application(s) described above. You can also request the Notice of Rights by contacting the Director of Regulatory Support, 4049 Reid St., Palatka, FL 32177-2529, tele. no. (386)329-4570.

NEWSPAPER ADVERTISING

ALACHUA
The Alachua County Record, Legal Advertising
P. O. Box 806
Gainesville, FL 32602
352-377-2444/ fax 352-338-1986

BRAFORD
Bradford County Telegraph, Legal Advertising
P. O. Drawer A
Starke, FL 32901
904-964-6305/ fax 904-964-8628

CLAY
Clay Today, Legal Advertising
1560 Kinsley Ave., Suite 1
Orange Park, FL 32073
904-264-3200/ fax 904-264-3285

FLAGLER
Flagler Tribune, c/o News Journal
P. O. Box 2831
Daytona Beach, FL 32120-2831
386- 681-2322

LAKE
Daily Commercial, Legal Advertising
P. O. Drawer 490007
Leesburg, FL 34749
352-365-8235/fax 352-365-1951

NASSAU
News-Leader, Legal Advertising
P. O. Box 766
Fernandina Beach, FL 32035
904-261-3696/fax 904-261-3698

ORANGE
Sentinel Communications, Legal Advertising
633 N. Orange Avenue
Orlando, FL 32801
407-420-5160/ fax 407-420-5011

PUTNAM
Palatka Daily News, Legal Advertising
P. O. Box 777
Palatka, FL 32178
386-312-5200/ fax 386-312-5209

SEMINOLE
Seminole Herald, Legal Advertising
300 North French Avenue
Sanford, FL 32771
407-323-9408

BAKER
Baker County Press, Legal Advertising
P. O. Box 598
Maclenny, FL 32063
904-259-2400/ fax 904-259-6502

BREVARD
Florida Today, Legal Advertising
P. O. Box 419000
Melbourne, FL 32941-9000
321-242-3832/ fax 321-242-6618

DUVAL
Daily Record, Legal Advertising
P. O. Box 1769
Jacksonville, FL 32201
904-356-2466 / fax 904-353-2628

INDIAN RIVER
Vero Beach Press Journal, Legal Advertising
P. O. Box 1268
Vero Beach, FL 32961-1268
772-221-4282/ fax 772-978-2340

MARION
Ocala Star Banner, Legal Advertising
2121 SW 19th Avenue Road
Ocala, FL 34474
352-867-4010/fax 352-867-4126

OKEECHOBEE
Okeechobee News, Legal Advertising
P. O. Box 639
Okeechobee, FL 34973-0639
863-763-3134/fax 863-763-5901

OSCEOLA
Little Sentinel, Legal Advertising
633 N. Orange Avenue
Orlando, FL 32801
407-420-5160/ fax 407-420-5011

ST. JOHNS
St. Augustine Record, Legal Advertising
P. O. Box 1630
St. Augustine, FL 32085
904-819-3436

VOLUSIA
News Journal Corporation, Legal Advertising
P. O. Box 2831
Daytona Beach, FL 32120-2831
(386) 681-2322

TECHNICAL REVIEW COMMITTEE COMMENTS
FINAL COMPLETE REVIEW 1/12/2015

Project: Lady Lake Crossing & Outparcel- Major Site Plan- MJSP 01/15-003

Proposal: Final Round of Complete Comments for Site

Description:

On 01/20/2015, Town Staff received an application for a Major Modification to Site Plan proposing for the construction of 52,000 Sq. Ft. of New Retail Building Space, and a 4,000 Sq. Ft. Building Development on the Outparcel between Tire Kingdom and McDonald's – Located on US Hwy 27/441, identified by Alternate Key numbers 3872777 and 3877865. The site plan was reviewed to determine if it is in compliance with the Land Development Regulations (LDRs) including parking, setbacks, landscaping, engineering, environmental protection and commercial design standards.

The subject area combined is approximately 7.71 +/- acres and is located within the Lady Lake Crossing Plaza. The property is zoned "PUD" (Planned Unit Development); which permits development and construction of the proposed improvements in accordance with adopted CP Memorandum of Agreement Ordinance 2006-04. The requested uses are consistent with the directives of the Comprehensive Plan, adopted Land Development Regulations, and ordinance 2006-04.

GENERAL INFORMATION

The engineering plans submitted, consisting of sixteen (16) sheets, are drawn on 24"x36" sheets and certified by Jay R. Jackson, **Professional Engineer with Kimley Horn and Associates, Inc.** The Landscaping Plans submitted, consisting of three (3) sheets, are drawn on 24"x36" sheets and certified by James Dunn Brown, **Landscape Architect with Cuhaci & Peterson.**

Below are staff comments from the Town of Lady Lake regarding your development project. A hard copy via hand delivery and an electronic copy via e-mail are provided to the applicant. Comments are organized by department and must be sufficiently addressed before the proposal may proceed

Following submittal of any required revisions and responses, correspondence will be forwarded indicating the proposal's status, either: (1) requiring additional revision or documentations; or (2) ready for approval. Site plans are subject to public hearing, as well as plats, annexation requests, zoning requests, and comprehensive plan requests. When applicable, you will receive written notification that the item is scheduled for review by the Planning and Zoning Board or Town Commission. For additional information, contact Thad Carroll at (352) 751-1521.

GROWTH MANAGEMENT

Questions may be directed to Wendy Then, at wthen@ladylake.org

1. Comments under the GM Review Report addressed on 02-24-2015.

POLICE

Questions may be directed to Chief Chris McKinstry at cmckinstry@ladylake.org

1. No comments at this time from the Police Dept.

FIRE

Questions may be directed to Kerry Barnett, Fire Inspector at 813-778-4981 or k-15122@peoplepc.com

1. Comments addressed as per communication dated 02-24-2015.

BUILDING

Questions may be directed to Dallas Foss, Building Official at dfoss@usanova.com.

1. All comments addressed as per communication dated 01-26-2015.

PUBLIC WORKS

Questions may be directed to Butch Goodman, Utilities Supervisor at bgoodman@ladylakepw.org

1. Comments addressed as per communication dated 02-19-2015.

ENGINEERING CONSULTANT

Questions may be directed to Steven Cockerham, P.E., at Steven.Cockerham@neel-schaffer.com

1. Comments addressed as per communication dated 02-24-2015.

LAKE-SUMTER MPO

Questions may be directed to Pam Richmond, at PRichmond@LakeSumterMPO.com or at 352-315-0170

1. Project satisfied by the Lake-Sumter MPO Office as per communication dated 02-04-2015.

Front Elevation

Cuhaci & Peterson
Architects Engineers Planners
ORLANDO • PHILADELPHIA

2130712 LADY LAKE CROSSING EAST

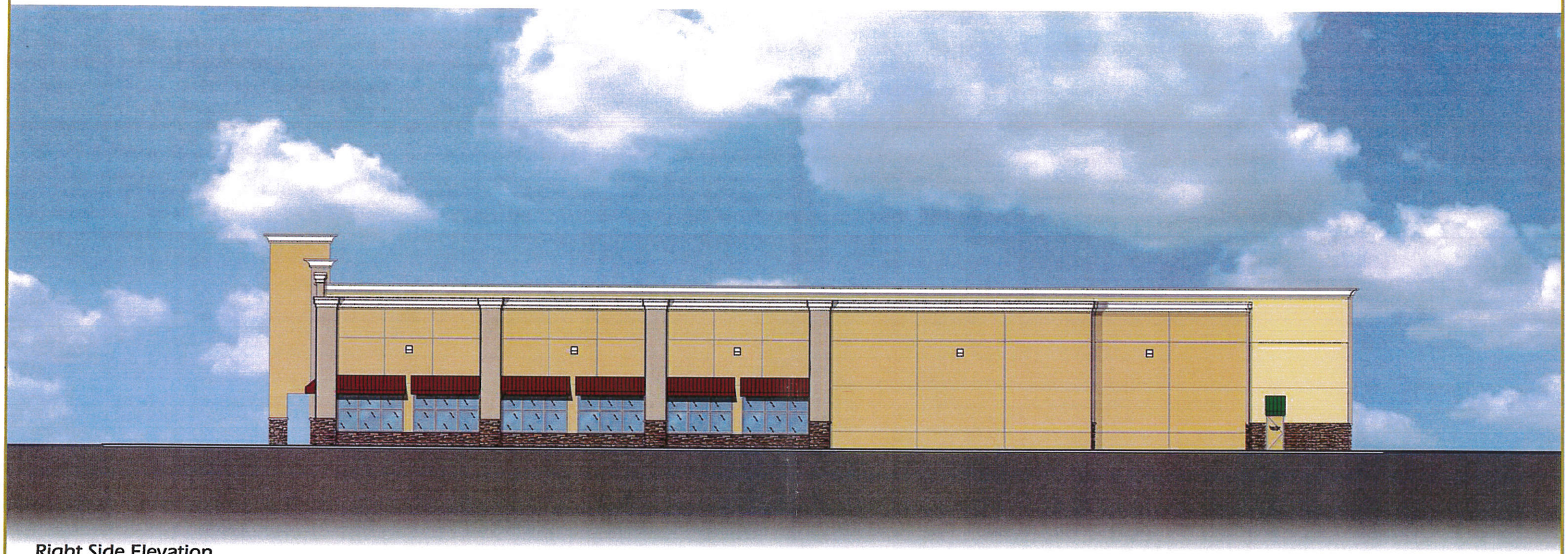

Right Side Elevation

Cuhaci & Peterson
Architects Engineers Planners
ORLANDO • PHILADELPHIA

2130712 LADY LAKE CROSSING EAST

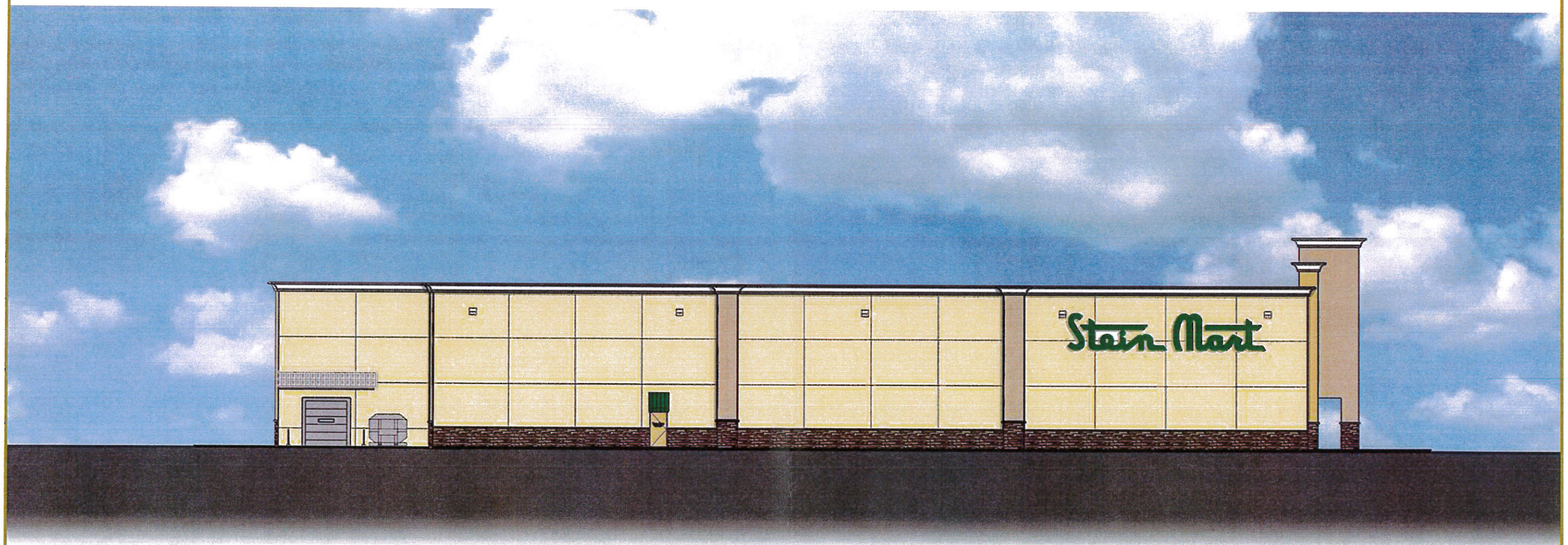

Left Side Elevation

Cuhaci & Peterson
Architects Engineers Planners
ORLANDO • PHILADELPHIA

2130712 LADY LAKE CROSSING EAST

Rear Elevation

Cuhaci & Peterson
Architects Engineers Planners
ORLANDO • PHILADELPHIA

2130712 LADY LAKE CROSSING EAST

CONSTRUCTION PLANS
FOR
LADY LAKE CROSSING

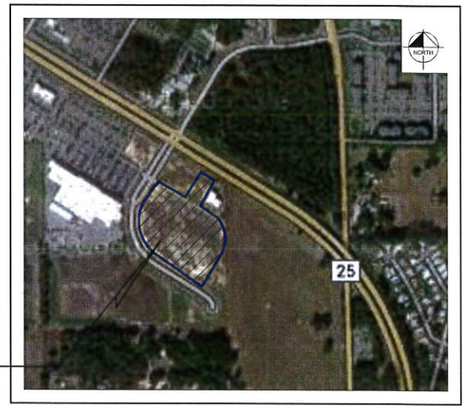

AERIAL PHOTOGRAPH
N.T.S.

PARCEL #'s 08-18-24-1000-0000-0600
08-18-24-1001-0000-0200
TOWN OF LADY LAKE, FLORIDA
AUGUST 8, 2014

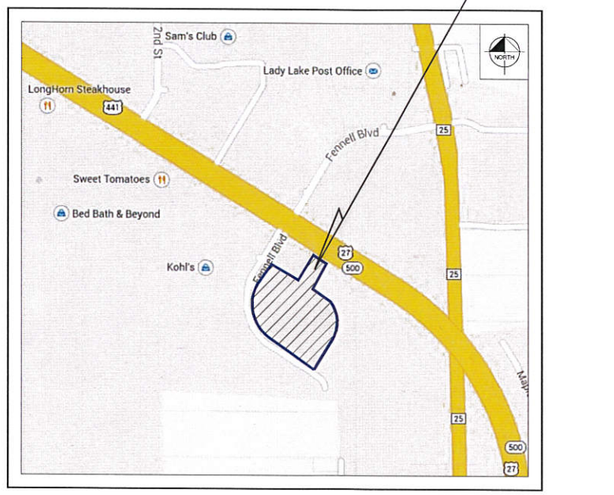

SECTION 08, TOWNSHIP 18S, RANGE 24E
LOCATION MAP
1" = 500'

SHEET INDEX

C0.0	COVER SHEET
C1.0	GENERAL NOTES
C2.0 - C2.1	STORMWATER POLLUTION PREVENTION PLAN
C3.0	EXISTING CONDITIONS - DEMOLITION PLAN
C4.0 - C4.2	SITE PLAN
C5.0 - C5.1	PAVING GRADING AND DRAINAGE
C6.0 - C6.1	UTILITY PLAN
C7.0 - C7.1	GENERAL CONSTRUCTION DETAILS
C8.0 - C8.1	TOWN OF LADY LAKE UTILITY DETAILS
LS-1 - LS-2	LANDSCAPE PLAN
LS-3	LANDSCAPE DETAILS AND NOTES
IRR-1 - IRR-2	IRRIGATION PLAN
IRR-3	IRRIGATION SCHEDULES AND NOTES
IRR-4 - IRR-6	IRRIGATION DETAILS
IRR-7 - IRR-8	IRRIGATION SPECIFICATIONS
E003	PHOTOMETRIC PLAN
E201	SITE PLAN DETAIL

LEGAL DESCRIPTION

LOTS 4 AND 6, TRACTS B, D AND E, OF LADY LAKE CROSSING, ACCORDING TO THE PLAT THEREOF AS RECORDED IN PLAT BOOK 63, PAGES 57 AND 58, PUBLIC RECORDS OF LAKE COUNTY, FLORIDA.

AND

LOT 2, OF LADY LAKE CROSSING LOT 5 REPLAT, ACCORDING TO THE PLAT THEREOF AS RECORDED IN PLAT BOOK 64, PAGE 17, PUBLIC RECORDS OF LAKE COUNTY, FLORIDA.

PROJECT DESCRIPTION

THE PROPOSED PROJECT IS TO DEVELOP THE EXISTING VACANT PROPERTY. THE PROJECT IS PROPOSING 52,670 SF OF RETAIL.

WAIVER REQUEST

FROM SECTION 7-5 TO ELIMINATE THE REQUIRED 12'x25' OFF-STREET LOADING ZONE FOR RETAIL #4.

PROJECT TEAM

DEVELOPER
THE BENCHMARK GROUP
4053 MAPLE ROAD
AMHERST, NY 14226
CONTACT: MARTIN J. DELLEBOVI
PHONE: (716) 833-4966

ENGINEER
KIMLEY HORN AND ASSOCIATES
3660 MAGUIRE BLVD., SUITE 200
ORLANDO, FL 32803
CONTACT: JAY R. JACKSON
PHONE: (407) 898-1511
EMAIL: jay.jackson@kimley-horn.com

SURVEYOR
CUMMINS SURVEYING, INC.
2758 SUSANDAY DR.
ORLANDO, FL 32812
CONTACT: MIKE CUMMINS
PHONE: (407) 894-4254
MOBILE: (321)377-0564
EMAIL: MC5592@BELLSOUTH.NET

LANDSCAPE ARCHITECT:
CUHACI & PETERSON.
1925 PROSPECT AVE
ORLANDO, FL 32814
CONTACT: JAY BROWN
PHONE: (407) 661-9100
FAX: (407) 661-9101
EMAIL: jayb@C-P.com

UTILITY PROVIDERS

WATER, SEWER AND RECLAIMED WATER:
TOWN OF LADY LAKE
136 SKYLINE DR.
LADY LAKE, FL 32159
CONTACT: KEN KEOUGH
PHONE: (352) 751-1526

POWER:
DUKE ENERGY
452 EAST CROWN POINTE RD.
WINTER GARDEN, FL 34787
CONTACT: SHARON DEAR
PHONE: (352) 751-1526

TELEPHONE:
CENTURY LINK
319 SE BROADWAY
OCALA, FL 34470
CONTACT:
PHONE:

CABLE:
COMCAST CABLEVISION
8130 CR 44 LEG A
LEESBURG, FL 34788
CONTACT:
PHONE:

GAS:
TECO ENERGY
316 SW 33RD AVE
OCALA, FL 34474
CONTACT: CHRIS URIA
PHONE: (352) 401-3428
EMAIL:CKURIA@TECOENERGY.COM

PREPARED BY
Kimley»Horn

© 2015 KIMLEY-HORN AND ASSOCIATES, INC.

3660 Maguire Boulevard, Suite 200, Orlando, FL 32803
Phone: (407) 898-1511
WWW.KIMLEY-HORN.COM CA 00000696

CALL 48 HOURS BEFORE YOU DIG
IT'S THE LAW! DIAL 811
811 Know what's below. Call before you dig.
SUNSHINE STATE ONE CALL OF FLORIDA, INC.

JAY R. JACKSON LICENSE No. 54247 STATE OF FLORIDA PROFESSIONAL ENGINEER

JAY R. JACKSON, P.E.
FL P.E. NO. 54247
FEB 24 2015

LADY LAKE CROSSING
AUGUST 8, 2014
ENGINEER'S PROJECT No. 049372008

REVISIONS:

No.	DESCRIPTION	DATE	BY
1	REVISED PER TOWN OF LADY LAKE COMMENTS	01/30/2015	RWS
2	REVISED PER TOWN OF LADY LAKE COMMENTS	02/24/2015	RWS

Drawing name: K:\ORL_Civil\049372008-Lady Lake Crossing Retail\CADD\CONST\PlanSheets\C0.0 COVER.dwg COVER SHEET Feb 24, 2015 8:08am by: robert.spence
This document, together with the concepts and designs presented herein, as an instrument of service, is intended only for the specific purpose and client for which it was prepared. Reuse of and improper reliance on this document without written authorization and adaptation by Kimley-Horn and Associates, Inc. shall be without liability to Kimley-Horn and Associates, Inc.

GENERAL

1. LOCATIONS, ELEVATIONS, AND DIMENSIONS OF EXISTING UTILITIES, STRUCTURES AND OTHER FEATURES ARE SHOWN ACCORDING TO THE BEST INFORMATION AVAILABLE AT THE TIME OF PREPARATION OF THESE PLANS. THE EXISTING UTILITY INFORMATION SHOWN IS BASED ON THE TOPOGRAPHIC SURVEY PROVIDED BY CUMMINS SURVEYING AND MAPPING. THE CONTRACTOR SHALL VERIFY THE LOCATIONS, ELEVATIONS, AND DIMENSIONS OF ALL EXISTING UTILITIES, STRUCTURES AND OTHER FEATURES, AFFECTING THIS AREA PRIOR TO CONSTRUCTION WORK.

2. PRIOR TO THE INITIATION OF SITE CONSTRUCTION, THE CONTRACTOR SHALL VERIFY ANY EXISTING UTILITIES INCLUDING GAS, WATER, ELECTRIC, CABLE TV, COMMUNICATIONS, SANITARY SEWERS AND STORM DRAINAGE SYSTEMS, ON AND / OR ADJACENT TO THE SITE. REMOVE OR CAP AS NECESSARY.

3. THE CONTRACTOR SHALL EXERCISE CAUTION IN AREAS OF BURIED UTILITIES AND SHALL CALL "SUNSHINE" AT 1-800-432-4770 AT LEAST 48 HOURS PRIOR TO CONSTRUCTION TO ARRANGE FOR FIELD LOCATIONS OF BURIED UTILITIES.

4. THE CONTRACTOR IS RESPONSIBLE FOR REPAIRING ANY DAMAGE TO EXISTING FACILITIES, ABOVE OR BELOW GROUND, THAT MAY OCCUR AS A RESULT OF THE WORK PERFORMED, BY THE CONTRACTOR OR SUB-CONTRACTORS, AS CALLED FOR IN THESE CONTRACT DOCUMENTS.

5. IT IS THE CONTRACTOR'S RESPONSIBILITY TO BECOME FAMILIAR WITH THE PERMIT AND INSPECTION REQUIREMENTS SPECIFIED BY THE VARIOUS GOVERNMENTAL AGENCIES AND THE ENGINEER. THE CONTRACTOR SHALL OBTAIN ALL NECESSARY PERMITS PRIOR TO CONSTRUCTION, AND SCHEDULE INSPECTIONS ACCORDING TO AGENCY INSTRUCTION/REQUIREMENTS.

6. THE CONTRACTOR SHALL SUBMIT SHOP DRAWINGS, ON ALL PRECAST AND MANUFACTURED ITEMS, TO THE OWNER'S ENGINEER FOR REVIEW. FAILURE TO OBTAIN APPROVAL BEFORE INSTALLATION MAY RESULT IN REMOVAL AND REPLACEMENT AT THE CONTRACTOR'S EXPENSE.

7. ALL UTILITY SERVICE STUB-OUTS (WATER, SANITARY SEWER, etc.) ARE TO BE INSTALLED WITHIN 5' OF THE POINT ON CONNECTION TO THE BUILDING(S), UNLESS OTHERWISE NOTED ON PLANS.

8. CONTRACTOR TO COORDINATE WITH THE APPLICABLE ELECTRIC UTILITY SUPPLIER REGARDING ANY NECESSARY RELOCATION(S) OF UNDERGROUND AND/OR OVERHEAD ELECTRIC FACILITIES, AND FOR THE LOCATION AND INSTALLATION OF TRANSFORMER PAD(S) AND ASSOCIATED ELECTRIC FACILITIES.

9. SAFETY:
   A. DURING THE CONSTRUCTION AND/OR MAINTENANCE OF THIS PROJECT, ALL SAFETY REGULATIONS ARE TO BE ENFORCED. THE CONTRACTOR OR HIS REPRESENTATIVE SHALL BE RESPONSIBLE FOR THE CONTROL AND SAFETY OF THE TRAVELING PUBLIC AND THE SAFETY OF HIS/HER PERSONNEL.
   B. LABOR SAFETY REGULATIONS SHALL CONFORM TO THE PROVISIONS SET FORTH BY OSHA.
   C. THE MINIMUM STANDARDS AS SET FORTH IN THE CURRENT EDITION OF "THE STATE OF FLORIDA, MANUAL ON TRAFFIC CONTROL AND SAFE PRACTICES FOR STREET AND HIGHWAY CONSTRUCTION, MAINTENANCE AND UTILITY OPERATIONS" SHALL BE FOLLOWED IN THE DESIGN, APPLICATION, INSTALLATION, MAINTENANCE AND REMOVAL OF ALL TRAFFIC CONTROL DEVICES, WARNING DEVICES AND BARRIERS NECESSARY TO PROTECT THE PUBLIC AND CONSTRUCTION PERSONNEL FROM HAZARDS WITHIN THE PROJECT LIMITS.
   D. ALL TRAFFIC CONTROL MARKINGS AND DEVICES SHALL CONFORM TO THE PROVISIONS SET FORTH IN THE MANUAL ON UNIFORM TRAFFIC CONTROL DEVICES PREPARED BY THE U.S. DEPARTMENT OF TRANSPORTATION FEDERAL HIGHWAY ADMINISTRATION.
   E. ALL SUBSURFACE CONSTRUCTION SHALL COMPLY WITH THE "TRENCH SAFETY ACT". THE CONTRACTOR SHALL INSURE THAT THE METHOD OF TRENCH PROTECTION AND CONSTRUCTION IS IN COMPLIANCE WITH THE OCCUPATIONAL SAFETY AND HEALTH ADMINISTRATION (OSHA) REGULATIONS.
   F. IT SHALL BE THE SOLE RESPONSIBILITY OF THE CONTRACTOR TO COMPLY AND ENFORCE ALL APPLICABLE SAFETY REGULATIONS. THE ABOVE INFORMATION HAS BEEN PROVIDED FOR THE CONTRACTOR'S INFORMATION ONLY AND DOES NOT IMPLY THAT THE OWNER OR ENGINEER WILL INSPECT AND/OR ENFORCE SAFETY REGULATIONS.

10. IT SHALL BE THE RESPONSIBILITY OF THE CONTRACTOR TO OBTAIN AN R-O-W UTILIZATION PERMIT (IF REQUIRED) FOR CONSTRUCTION OF THE PROPOSED UTILITIES. THIS PERMIT MUST BE OBTAINED BY A DULY LICENSED PLUMBING CONTRACTOR (OR CLASS A GENERAL CONTRACTOR) PRIOR TO THE START OF CONSTRUCTION. THESE PLANS AND ANY SUBSEQUENT REVISIONS TO THESE PLANS, THAT ARE ISSUED BY THE ENGINEER, WILL BE SUBJECT TO THE APPROVAL CONDITIONS OF THIS PERMIT.

11. THE GRAPHIC INFORMATION DEPICTED ON THESE PLANS HAS BEEN COMPILED TO PROPORTION BY SCALE AS ACCURATELY AS POSSIBLE. HOWEVER, DUE TO REPRODUCTIVE DISTORTION, REDUCTION, AND/OR REVISIONS, INFORMATION CONTAINED HEREIN IS NOT INTENDED TO BE SCALED FOR CONSTRUCTION PURPOSES.

12. ALL SPECIFICATIONS AND DOCUMENTS REFERENCED HEREIN SHALL BE OF THE LATEST REVISION.

13. ALL UNDERGROUND UTILITIES MUST BE IN-PLACE, TESTED AND INSPECTED PRIOR TO BASE AND SURFACE CONSTRUCTION.

14. WORK PERFORMED UNDER THIS CONTRACT SHALL INTERFACE SMOOTHLY WITH ANY OTHER WORK BEING PERFORMED ON SITE BY OTHER CONTRACTORS/SUBCONTRACTORS AND UTILITY COMPANIES. IT WILL BE NECESSARY FOR THE GENERAL CONTRACTOR TO COORDINATE AND SCHEDULE HIS/HER ACTIVITIES ACCORDINGLY.

15. ALL DIMENSIONS ARE TO FACE OF CURB.

16. ALL SIGNAGE MUST COMPLY WITH CHAPTER 17 OF THE LADY LAKE LAND DEVELOPMENT CODE.

17. ANY DISCREPANCIES ON THE DRAWINGS SHALL BE IMMEDIATELY BROUGHT TO THE ATTENTION OF THE OWNER AND ENGINEER BEFORE COMMENCING WORK. NO FIELD CHANGES OR DEVIATIONS FROM DESIGN ARE TO BE MADE WITHOUT PRIOR APPROVAL OF THE OWNER AND NOTIFICATION TO THE ENGINEER.

18. FIRE LINE IS DESIGNED BY OTHERS AND IS SHOWN FOR COORDINATION PURPOSES ONLY. FIRE LINES SHALL BE INSTALLED BY A CONTRACTOR, DULY LICENSED BY THE STATE OF FLORIDA FIRE MARSHALL'S OFFICE. CONTRACTOR TO VERIFY REQUIREMENTS PRIOR TO CONSTRUCTION OF THE FIRE PROTECTION SYSTEM.

19. ALL CONCRETE SIDEWALKS SHALL BE CONSTRUCTED PER FDOT DESIGN INDEX (ED. 2014) #310.

20. SITEWORK SHALL COMPLY WITH 2012 FLORIDA BUILDING CODE AND FLORIDA ACCESSIBILITY CODE.

21. ANY WELLS DISCOVERED ON SITE THAT WILL HAVE NO USE MUST BE PLUGGED BY A LICENSED WILL DRILLING CONTRACTOR IN A MANNER APPROVED BY ALL JURISDICTIONAL AGENCIES. CONTRACTOR SHALL BE RESPONSIBLE FOR OBTAINING ANY WELL ABANDONMENT PERMITS REQUIRED. ANY WELL DISCOVERED DURING EARTH MOVING OR EXCAVATION SHALL BE REPORTED TO THE APPROPRIATE JURISDICTIONAL AGENCIES WITHIN 24 HOURS AFTER DISCOVERY IS MADE.

STORM DRAINAGE SYSTEM

1. STANDARD INDEXES REFER TO THE 2012/2013 EDITION OF F.D.O.T. "ROADWAY AND TRAFFIC DESIGN STANDARDS."

2. ALL STORM SEWER PIPE SHALL BE REINFORCED CONCRETE CLASS III (ASTM C-76) UNLESS OTHERWISE NOTED ON PLANS. ALL DRAINAGE STRUCTURES SHALL BE IN ACCORDANCE WITH F.D.O.T. ROADWAY AND TRAFFIC DESIGN STANDARDS UNLESS OTHERWISE NOTED ON PLANS.

3. PIPE LENGTHS SHOWN ARE APPROXIMATE AND TO CENTER OF DRAINAGE STRUCTURES, WITH THE EXCEPTION OF MITERED END AND FLARED END SECTIONS, WHICH ARE NOT INCLUDED IN LENGTHS.

4. ALL DRAINAGE STRUCTURE GRATES AND COVERS, EITHER EXISTING OR PROPOSED SHALL BE TRAFFIC RATED FOR H-20 LOADINGS. THE CONTRACTOR SHALL BE RESPONSIBLE FOR ANY NECESSARY UPGRADES TO EXISTING DRAINAGE STRUCTURES.

5. CONSTRUCTION OF THE STORMWATER MANAGEMENT SYSTEM MUST BE COMPLETE AND ALL DISTURBED AREAS STABILIZED IN ACCORDANCE WITH THE PERMITTED PLANS AND CONDITIONS PRIOR TO ANY OF THE FOLLOWING: ISSUANCE OF THE FIRST CERTIFICATE OF OCCUPANCY; INITIATION OF INTENDED USE OF THE INFRASTRUCTURE; OR TRANSFER OF RESPONSIBILITY FOR MAINTENANCE OF THE SYSTEM TO A LOCAL GOVERNMENT OR OTHER RESPONSIBLE ENTITY.

6. THE CONTRACTOR SHALL INSTALL ALL UNDERGROUND STORM WATER PIPING PER JURISDICTION REGULATIONS (MANUFACTURER'S RECOMMENDATIONS SHALL BE UTILITIZED IF MORE STRINGENT).

7. STORM WATER PIPES, STRUCTURES, MINIMUM COVER AND INSTALLATION PROCEDURES TO BE IN ACCORDANCE WITH THE TOWN OF LADY LAKE.

8. ALL DRAINAGE PIPES SHALL BE FILTER FABRIC WRAPPED PER FDOT STANDARD DESIGN INDEX (ED. 2013) #280.

DRAINAGE SYSTEM TESTING AND INSPECTION

1. THE STORM DRAINAGE PIPING SYSTEM SHALL BE SUBJECT TO A VISUAL INSPECTION BY THE OWNER'S ENGINEER PRIOR TO THE PLACEMENT OF BACKFILL. CONTRACTOR TO NOTIFY THE ENGINEER 2 FULL BUSINESS DAYS IN ADVANCE TO SCHEDULE INSPECTION.

2. THE CONTRACTOR SHALL MAINTAIN AND PROTECT FROM MUD, DIRT, DEBRIS, ETC. THE STORM DRAINAGE SYSTEM UNTIL FINAL ACCEPTANCE OF THE PROJECT. THE STORM SYSTEM WILL BE REINSPECTED BY THE OWNER'S ENGINEER PRIOR TO APPROVAL FOR CERTIFICATE OF OCCUPANCY PURPOSES. THE CONTRACTOR MAY BE REQUIRED TO RECLEAN PIPES AND INLETS AT THE CONTRACTORS EXPENSE AND PRIOR TO FINAL ACCEPTANCE.

PAVING, GRADING AND DRAINAGE

1. ALL DELETERIOUS SUBSURFACE MATERIAL (I.E. MUCK, PEAT, BURIED DEBRIS, ETC.) IS TO BE EXCAVATED AND REPLACED WITH SUITABLE/COMPACTED SOILS, AS DIRECTED BY THE GEOTECHNICAL ENGINEER OF RECORD OR THE OWNERS ENGINEERS. DELETERIOUS MATERIAL IS TO BE STOCKPILED OR REMOVED FROM THE SITE AS DIRECTED BY THE OWNER OR OWNER'S ENGINEER. EXCAVATED AREAS ARE TO BE BACKFILLED WITH APPROVED MATERIALS AND COMPACTED AS SHOWN ON THESE PLANS AND PER THE GEOTECHNICAL REPORT. CONTRACTOR IS RESPONSIBLE FOR ACQUIRING ANY PERMITS THAT ARE NECESSARY FOR REMOVING DELETERIOUS MATERIAL FROM THE SITE.

2. THE CONTRACTOR SHALL BE RESPONSIBLE FOR PROTECTING EXCAVATIONS AGAINST COLLAPSE AND WILL PROVIDE BRACING, SHEETING OR SHORING AS NECESSARY. DEWATERING METHODS SHALL BE USED AS REQUIRED TO KEEP TRENCHES DRY WHILE PIPE AND APPURTENANCES ARE BEING PLACED.

3. ALL NECESSARY FILL AND EMBANKMENT THAT IS PLACED DURING CONSTRUCTION SHALL CONSIST OF MATERIAL SPECIFIED BY THE OWNER'S SOILS TESTING COMPANY OR ENGINEER AND BE PLACED AND COMPACTED ACCORDING TO THESE PLANS.

4. PROPOSED SPOT ELEVATIONS REPRESENT FINISHED PAVEMENT OR GROUND SURFACE GRADES, UNLESS OTHERWISE NOTED.

5. IT MAY BE NECESSARY TO FIELD ADJUST PAVEMENT ELEVATIONS TO PRESERVE THE ROOT SYSTEMS OF TREES SHOWN TO BE SAVED. CONTRACTOR TO COORDINATE WITH OWNER'S ENGINEER PRIOR TO ANY ELEVATION CHANGES.

6. CONTRACTOR SHALL TRIM, TACK AND MATCH EXISTING PAVEMENT AT LOCATIONS WHERE NEW PAVEMENT MEETS EXISTING PAVEMENT.

7. CURBING SHALL BE PLACED AT THE EDGES OF ALL PAVEMENT, UNLESS OTHERWISE NOTED. REFER TO THE 2012/2013 EDITION OF F.D.O.T. "ROADWAY AND TRAFFIC DESIGN STANDARDS" FOR DETAILS AND SPECIFICATIONS OF ALL F.D.O.T. TYPE CURB AND GUTTERS CALLED FOR IN THESE PLANS.

8. PRIOR TO CONSTRUCTING CONCRETE PAVEMENT, THE CONTRACTOR IS TO SUBMIT A PROPOSED JOINTING PATTERN TO THE SOILS ENGINEER FOR APPROVAL.

9. CONTRACTOR TO PROVIDE A 1/2" TO 1" BITUMINOUS EXPANSION JOINT MATERIAL WITH SEALER AT ABUTMENT OF CONCRETE AND OTHER MATERIALS (STRUCTURES, OTHER POURED)

10. ALL PAVEMENT MARKINGS SHALL BE MADE IN ACCORDANCE WITH F.D.O.T. STANDARD INDEX #17346.

11. THE CONTRACTOR WILL STABILIZE BY SEED AND MULCH, SOD, OR OTHER APPROVED MATERIALS ANY DISTURBED AREAS WITHIN ONE WEEK FOLLOWING CONSTRUCTION OF THE UTILITY SYSTEMS AND PAVEMENT AREAS. CONTRACTOR SHALL MAINTAIN SUCH AREAS UNTIL FINAL ACCEPTANCE BY OWNER. CONTRACTOR TO COORDINATE WITH OWNER REGARDING TYPE OF MATERIAL, LANDSCAPING AND IRRIGATION REQUIREMENTS.

12. THE CONTRACTOR SHALL RESTORE OFF-SITE CONSTRUCTION AREAS TO EQUAL AND/OR BETTER CONDITION THAN EXISTING PRIOR TO START OF CONSTRUCTION.

13. UNLESS OTHERWISE NOTED, GRADE TO MEET EXISTING ELEVATION AT PROPERTY LINES.

14. SURVEY MONUMENTS OR BENCHMARKS, WHICH HAVE TO BE DISTURBED BY THIS WORK, SHALL BE REPLACED UPON COMPLETION OF WORK BY A REGISTERED LAND SURVEYOR AT CONTRACTORS EXPENSE.

15. FINAL GRADES SHOWN INCLUDE SOD HEIGHT. ALL AREAS SHALL BE GRADED TO DRAIN AWAY FROM THE BUILDINGS.

16. ALL WORK TO BE PERFORMED IN ACCORDANCE WITH ALL LOCAL, STATE AND JURISDICTIONAL PERMITTING AGENCIES.

17. CONTRACTOR IS TO ADJUST ANY UTILITY ELEMENT MEANT TO BE FLUSH WITH GRADE (CLEAN-OUTS, MANHOLES, CATCH BASINS, INLETS, ETC.) THAT IS AFFECTED BY SITE WORK OR GRADE CHANGES, WHETHER SPECIFICALLY NOTED ON PLANS OR NOT.

PAVING/GRADING TESTING AND INSPECTION

1. THE CONTRACTOR IS RESPONSIBLE FOR COORDINATING APPLICABLE TESTING WITH THE SOILS ENGINEER. TESTS WILL BE REQUIRED PURSUANT WITH THE SOILS REPORT. UPON COMPLETION OF WORK THE SOILS ENGINEER WILL SUBMIT CERTIFICATIONS TO THE OWNER AND OWNER'S ENGINEER STATING THAT ALL REQUIREMENTS HAVE BEEN MET.

2. A QUALIFIED TESTING LABORATORY WILL BE PROVIDED BY CHEDDAR'S AND SHALL PERFORM ALL TESTING NECESSARY TO ASSURE COMPLIANCE OF THE IN-PLACE MATERIALS AS REQUIRED BY THESE PLANS AND GEOTECHNICAL REPORT, THE VARIOUS AGENCIES AND PERMIT CONDITIONS. SHOULD ANY RETESTING BE REQUIRED DUE TO THE FAILURE OF ANY TESTS TO MEET THESE REQUIREMENTS, THE CONTRACTOR WILL BEAR ALL COSTS OF SAID RETESTING.

POTABLE WATER SYSTEM

1. ALL DIP PIPE SHALL BE CLASS 50 OR HIGHER. REFER TO NOTE #4 BELOW FOR ADDITIONAL DIP SPECIFICATIONS. ADEQUATE MEASURES AGAINST CORROSION SHALL BE UTILIZED.

2. ALL WATER MAIN PIPE FITTINGS AND APPURTENANCES SHALL BE INSTALLED TO COMPLY WITH THE TOWN OF LADY LAKE STANDARDS AND SPECIFICATIONS.

3. ALL WATER SERVICE LINES, VALVES AND METERS SHALL BE INSTALLED TO COMPLY WITH APPLICABLE MUNICIPALITY/AGENCY DEPARTMENT STANDARDS AND SPECIFICATIONS.

4. ALL DUCTILE IRON PIPE, 4" TO 24", SHALL BE MANUFACTURED IN ACCORDANCE WITH THE LATEST EDITION OF AWWA C151/A21.51. PIPE SHALL BE FURNISHED IN 18 OR 20 FOOT SECTIONS, PIPE THICKNESS SHALL BE CLASS 50, UNLESS OTHERWISE SPECIFIED.

5. ALL WATER SYSTEM CONSTRUCTION, UP TO AND INCLUDING POINT OF METERING AND BACK FLOW PREVENTION (IF REQUIRED), SHALL BE BUILT ACCORDING TO ORANGE COUNTY UTILITIES STANDARDS AND SPECIFICATIONS.

6. CONTRACTOR TO INSTALL TEMPORARY BLOWOFFS, AT THE END(S) OF PROPOSED WATER MAINS AND SERVICE LATERALS TO BUILDING(S), TO ASSURE ADEQUATE FLUSHING AND DISINFECTION/CHLORINATION.

7. ALL WATER MAINS SHALL BE STERILIZED IN ACCORDANCE WITH THE APPLICABLE SECTION OF THE LATEST AWWA SPECIFICATION C651 AND TOWN OF LADY LAKE WATER DEPARTMENT SPECIFICATIONS.

8. ALL PVC WATER MAIN, 4" TO 8" DIAMETER PIPING, SHALL CONFORM TO ASTM D2241 AND ASTM 1784. PIPE SHALL BE AWWA C-900 DR-18. JOINTS SHALL BE RUBBER GASKETED PUSH-ON CONFORMING TO ASTM D1869.

9. POTABLE WATER MAINS WILL BE PVC SDR 21 (200 PSI) FOR PIPES LESS THEN 4". SCHEDULE 40 AND SCHEDULE 80 PIPING MATERIAL ARE ALSO ACCEPTABLE FOR PIPES SIZES LESS THAN 4". THE ABOVE TYPE INSTALLATIONS MUST BEAR THE "NFS" STAMP FOR COMPATIBILITY WITH POTABLE WATER USE.

10. ALL POLYVINYL CHLORIDE PIPE SHALL BE LAID WITH AN INSULATED 12 GAUGE A.W.G. SOLID STRAND COPPER WIRE WOUND AROUND THE PIPE FORMING ONE COMPLETE SPIRAL PER JOINT OF PIPE. THIS WIRE IS TO BE CONTINUOUS WITH SPLICES MADE ONLY BY METHODS APPROVED BY THE ENGINEER. THIS WIRE IS TO BE SECURED TO ALL VALVES, TEES AND ELBOWS.

11. ALL POTABLE WATER WORK SHALL CONFORM WITH APPLICABLE THE TOWN OF LADY LAKE UTILITIES DEPARTMENT STANDARDS AND SPECIFICATIONS.

POTABLE WATER TESTING AND INSPECTION

1. ALL COMPONENTS OF THE WATER SYSTEM, INCLUDING FITTINGS, HYDRANTS, CONNECTIONS, AND VALVES SHALL REMAIN UNCOVERED UNTIL PROPERLY PRESSURE TESTED AND ACCEPTED BY THE OWNER'S ENGINEER. PRESSURE TESTS TO BE IN ACCORDANCE WITH ORANGE COUNTY UTILITIES DEPARTMENT SPECIFICATIONS. CONTRACTOR TO NOTIFY THE OWNER'S ENGINEER AND APPLICABLE AGENCY INSPECTORS 2 FULL BUSINESS DAYS IN ADVANCE OF PERFORMING TESTS.

2. CONTRACTOR TO PERFORM CHLORINATION AND BACTERIOLOGICAL SAMPLING, AND OBTAIN CLEARANCE OF DOMESTIC AND FIRE LINE WATER SYSTEM(S). COPIES OF ALL BACTERIOLOGICAL TEST RESULTS ARE TO BE SUBMITTED TO THE OWNER'S ENGINEER FOR CERTIFICATION PURPOSES.

3. ALL WATER MAINS SHALL BE PRESSURE TESTED IN ACCORDANCE WITH AWWA MANUAL M23, CONCERNING HYDROSTATIC TESTING OF PVC PIPING. OFF-SITE UTILITIES HYDROSTATIC TESTING TO BE WITNESSED BY THE TOWN OF LADY LAKE WATER DEPARTMENT INSPECTOR.

SANITARY SYSTEM

1. ALL PVC PIPE SHALL BE SOLID WALL POLYVINYL CHLORIDE PIPE AND COMPLY WITH ASTM D 3034 AND ALL APPLICABLE ASTM DOCUMENTS AS COVERED IN SECTION NO. 2 OF ASTM D 3034. MAIN LINES SHALL BE A MINIMUM OF 8" DIAMETER, AND LATERALS SHALL BE A MINIMUM 6" DIAMETER.

2. ALL GRAVITY SEWERS MUST BE SDR 35 PVC, EXCEPT FOR PIPE DEEPER THAN 14 FEET, IN WHICH CASE SDR 26 PIPE SHALL BE USED. ELASTOMERIC GASKET JOINTS SHALL BE UTILIZED FOR PVC PIPE, AND SHALL COMPLY WITH ASTM F477, ASTM D3034 & ASTM F679. JOINTS SHALL COMPLY WITH ASTM D3212.

3. ALL SLOPES FOR GRAVITY SEWER MAINS AND SERVICE CONNECTIONS SHALL COMPLY WITH THE FOLLOWING MINIMUM GRADES: 4" @ 2.00%; 6" @ 1.00% ; AND 8" @ 0.40%.

4. ALL SANITARY SEWER WORK SHALL CONFORM WITH APPLICABLE THE TOWN OF LADY LAKE UTILITIES DEPARTMENT STANDARDS AND SPECIFICATIONS.

5. PRIOR TO COMMENCING WORK WHICH REQUIRES CONNECTING PROPOSED FACILITIES TO EXISTING LINES OR APPURTENANCES, THE CONTRACTOR SHALL VERIFY THE LOCATION AND ELEVATION(S) OF EXISTING CONNECTION POINT(S) AND NOTIFY THE OWNER'S ENGINEER OF ANY CONFLICTS OR DISCREPANCIES.

6. SANITARY SEWER MAINS SHALL HAVE SUITABLE MAGNETIC LOCATOR TAPE(S) BURIED AT LEAST 18 INCHES ABOVE THE MAIN LINES.

7. ALL ON-SITE PVC FORCE MAINS (IF REQUIRED) SHALL BE CLASS 200, DR 14 FOR 4" DIAMETER, AND CLASS 150 DR 18 FOR 6" TO 12" DIAMETER PIPE, IN ACCORDANCE WITH AWWA C900 STANDARDS. PVC FORCE MAIN PIPE SMALLER THAN 4" DIAMETER SHALL BE CLASS 200, SDR 21, IN ACCORDANCE WITH ASTM D 2241. FORCE MAIN SHALL BE SPIRAL WRAPPED WITH 2 INCH WIDE DARK GREEN STICK-ON VINYL TAPE. FORCE MAINS WITHIN THE RIGHT-OF-WAY SHALL BE CLASS 52 DIP, MINIMUM 4" DIAMETER.

8. FORCE MAINS SHALL HAVE SUITABLE MAGNETIC LOCATOR TAPE(S) BURIED AT LEAST 18 INCHES ABOVE THE FORCE MAIN.

SANITARY TESTING AND INSPECTION

1. ALL GRAVITY SEWER PIPING SHALL BE SUBJECT TO A VISUAL INSPECTION BY THE OWNER'S ENGINEER AND APPLICABLE MUNICIPALITY/AGENCY. THE CONTRACTOR SHALL NOTIFY THE ENGINEER 48 HOURS IN ADVANCE TO SCHEDULE INSPECTION(S). THE CONTRACTOR SHALL BE RESPONSIBLE FOR COSTS ASSOCIATED WITH A TELEVISED INSPECTION (TV) OF THE PROPOSED GRAVITY SEWER LINE CONSTRUCTION. THE CONTRACTOR SHALL PROVIDE COPIES OF THE TV INSPECTION TAPE TO THE ENGINEER, THE OWNER AND THE APPLICABLE MUNICIPALITY/AGENCY.

2. THE CONTRACTOR SHALL PERFORM AN INFILTRATION/EXFILTRATON TEST ON ALL GRAVITY SEWERS IN ACCORDANCE WITH THE REGULATORY AGENCY HAVING JURISDICTION. SAID TESTS ARE TO BE CERTIFIED BY THE ENGINEER OF RECORD AND SUBMITTED TO THE REGULATORY AGENCY FOR APPROVAL. THE SCHEDULING, COORDINATION AND NOTIFICATION OF ALL PARTIES IS THE CONTRACTOR'S RESPONSIBILITY.

3. LEAKAGE TESTS ARE SPECIFIED REQUIRING THAT:
   A. THE LEAKAGE EXFILTRATION OR INFILTRATION DOES NOT EXCEED 200 GALLONS PER INCH OF PIPE DIAMETER PER MILE PER DAY FOR ANY SECTION OF THE SYSTEM.
   B. EXFILTRATION OR INFILTRATION TESTS BE PERFORMED WITH A MINIMUM POSITIVE HEAD OF 2 FEET.
   C. AIR TESTS, AS A MINIMUM, CONFORM TO THE TEST PROCEDURE DESCRIBED IN ASTM C-828 FOR CLAY PIPE, ASTM C 924 FOR CONCRETE PIPE, ASTM F-1417 FOR PLASTIC PIPE, AND FOR OTHER MATERIALS APPROPRIATE TEST PROCEDURES.

4. CONTRACTOR TO PERFORM APPROPRIATE DEFLECTION TESTS FOR ALL FLEXIBLE PIPE. TESTING IS REQUIRED AFTER THE FINAL BACKFILL HAS BEEN IN PLACE AT LEAST 30 DAYS TO PERMIT STABILIZATION OF THE SOIL-PIPE SYSTEM. TESTING REQUIREMENTS SPECIFY:
   A. NO PIPE SHALL EXCEED A DEFLECTION OF 5%.
   B. USING A RIGID BALL OR MANDREL FOR THE DEFLECTION TEST WITH A DIAMETER NOT LESS THAN 95% OF THE BASE INSIDE DIAMETER OR AVERAGE INSIDE DIAMETER OF THE PIPE, DEPENDING ON WHICH IS SPECIFIED IN THE ASTM SPECIFICATION, INCLUDING THE APPENDIX, TO WHICH THE PIPE IS MANUFACTURED.
   C. PERFORMING THE TEST WITHOUT MECHANICAL PULLING DEVICES.

5. CONTRACTOR TO INSPECT & TEST MANHOLE FOR WATERTIGHTNESS OR DAMAGE PRIOR TO PLACING INTO SERVICE. AIR TESTING, IF SPECIFIED FOR CONCRETE SEWER MANHOLES, SHALL CONFORM TO THE TEST PROCEDURES DESCRIBED IN ASTM C-1244.

TREES AND VEGETATION

1. THE CONTRACTOR IS TO MINIMIZE THE REMOVAL OF VEGETATION TO THE GREATEST EXTENT PRACTICAL. NO TREES SHALL BE REMOVED OR DAMAGED WITHOUT OWNER'S APPROVAL. TREES IN CLOSE PROXIMITY TO CONSTRUCTION SHALL BE PROTECTED BY ORANGE FENCING.

2. THE CONTRACTOR SHALL BE RESPONSIBLE FOR THE MAINTENANCE OF ALL LANDSCAPE BUFFERS AND RETENTION AND DETENTION FACILITIES UNTIL THE WORK HAS BEEN ACCEPTED BY THE OWNER. ALL DISTURBED AREAS SHALL BE RETURNED TO THEIR ORIGINAL CONDITION.

AS BUILT

UPON COMPLETION OF CONSTRUCTION, THE CONTRACTOR SHALL FURNISH THE OWNER'S ENGINEER WITH COMPLETE "AS-BUILT" INFORMATION, CERTIFIED BY A REGISTERED LAND SURVEYOR. THIS "AS-BUILT" INFORMATION SHALL INCLUDE INVERT ELEVATIONS, LOCATIONS OF STRUCTURES FOR ALL UTILITIES INSTALLED, AS WELL AS GRADE BREAK LOCATIONS AND ELEVATIONS FOR PROPOSED CONSTRUCTION. NO ENGINEER'S CERTIFICATIONS FOR CERTIFICATE OF OCCUPANCY (C.O.) PURPOSES WILL BE MADE UNTIL THIS INFORMATION HAS BEEN RECEIVED AND ACCEPTED BY THE OWNER'S ENGINEER.

CALL 48 HOURS BEFORE YOU DIG
IT'S THE LAW! DIAL 811
811 Know what's below. Call before you dig.
SUNSHINE STATE ONE CALL OF FLORIDA, INC.

No.	REVISIONS	DATE	BY
1	REVISED PER CLIENT	01/26/15	RWS
2	REVISED PER COMMENTS	02/19/15	RWS

Kimley»Horn
© 2014 KIMLEY-HORN AND ASSOCIATES, INC.
3660 MAGUIRE BOULEVARD, SUITE 200, ORLANDO, FL 32803
PHONE: 407-898-1511
WWW.KIMLEY-HORN.COM CA 00000696

LICENSED PROFESSIONAL
JAY R. JACKSON, P.E.
FLORIDA LICENSE NUMBER 54247
DATE: FEB 24 2015

KHA PROJECT 049372008
DATE 08/08/2014
SCALE AS SHOWN
DESIGNED BY RWS
DRAWN BY RWS
CHECKED BY JRJ

GENERAL NOTES

LADY LAKE CROSSING
TOWN OF LADY LAKE FLORIDA

SHEET NUMBER
C1.0

Plotted By: Spence, Robert Sheet Set: LadyLakeRetailCrossing Layout: C1.0 GENERAL NOTES February 24, 2015 08:09:31am K:\ORL_Civil\049372008-Lady Lake Crossing Retail\CADD\CONST\PlanSheets\C1.0-C1.1 GENERAL NOTES.dwg
This document, together with the concepts and designs presented herein, as an instrument of service, is intended only for the specific purpose and client for which it was prepared. Reuse of and improper reliance on this document without written authorization and adaptation by Kimley-Horn and Associates, Inc. shall be without liability to Kimley-Horn and Associates, Inc.

DEMOLITION

1. CONTRACTOR SHALL SUBMIT DEMOLITION SCHEDULE TO OWNER PRIOR TO PROCEEDING WITH DEMOLITION ACTIVITIES.
2. EXTENT OF SITE CLEARING IS SHOWN ON DRAWINGS.
3. CONTRACTOR SHALL CONDUCT SITE DEMOLITION OPERATIONS TO ENSURE MINIMUM INTERFERENCE WITH ROADS, STREETS, WALKS, AND OTHER ADJACENT OCCUPIED OR USED FACILITIES. DO NOT CLOSE OR OBSTRUCT STREETS, WALKS OR OTHER OCCUPIED OR USED FACILITIES WITHOUT PERMISSION FROM AUTHORITIES HAVING JURISDICTION.
4. CONTRACTOR SHALL PROVIDE PROTECTION NECESSARY TO PREVENT DAMAGE TO EXISTING IMPROVEMENTS INDICATED ON PLAN "EXISTING TO REMAIN".
5. CONTRACTOR SHALL RESTORE DAMAGED IMPROVEMENTS TO THEIR ORIGINAL CONDITION, AS ACCEPTABLE TO PARTIES HAVING JURISDICTION.
6. CONTRACTOR SHALL REMOVE WASTE MATERIALS AND UNSUITABLE AND EXCESS TOPSOIL FROM PROPERTY AND DISPOSE OF OFF-SITE IN A LEGAL MANNER.
7. CONTRACTOR SHALL DEMOLISH AND COMPLETELY REMOVE FROM SITE MATERIAL INDICATED ON PLAN OR NOTES "TO BE REMOVED".
8. CONTRACTOR SHALL PROTECT STRUCTURES, UTILITIES, SIDEWALKS, PAVEMENTS, AND OTHER FACILITIES FROM DAMAGE CAUSED BY SETTLEMENT, LATERAL MOVEMENT, UNDERMINING, WASHOUT AND OTHER HAZARDS CREATED BY THE DEMOLITION OPERATION.

DEWATERING NOTES

1. DURING THE EXCAVATION OF THE STORMWATER FACILITIES, AND IF GROUNDWATER IS ENCOUNTERED, THE CONTRACTOR SHALL CONSTRUCT A SEDIMENT BASIN TO PROVIDE A DISCHARGE POINT FOR DEWATERING. THE SEDIMENT BASIN CAN BE CELL IN THE PROPOSED EXCAVATION AREA OF A POND OR IT CAN BE A BERMED AREA ABOVE GROUND. ALL DEWATERING MUST BE HELD IN THE SEDIMENT AREA UNTIL THE WATER IS CLEAN SUCH THAT THERE WOULD BE NO TURBID DISCHARGE. AFTER THE WATER IN THE SEDIMENT BASIN IS CLEAN, THE WATER MAY BE RELEASED INTO THE ON-SITE POND PROVIDED THERE IS NO ADVERSE IMPACT TO THE EXISTING WATER QUALITY.
2. UNDER NO CIRCUMSTANCES WILL THE DISCHARGE FROM THE ON-SITE DEWATERING BE DIRECTLY DISCHARGED OFFSITE.
3. DURING THE EXCAVATION THE CONTRACTOR SHALL NOT PENETRATE THE EXISTING CLAY LAYER. IF THE CONTRACTOR ENCOUNTERS THE CLAY LAYER, HE/SHE IS TO PLACE A MINIMUM OF 2 FEET OF SANDY MATERIAL OVER THE CLAY AND TERMINATE THE DEPTH OF THE EXCAVATION.
4. IF CONTRACTOR ENCOUNTERS SILTY/CLAY SAND, WHICH CAUSE THE WATER TO BECOME TURBID, HE/SHE SHALL TREAT THE SEDIMENT BASIN WITH CHEMICAL ADDITIVE SUCH AS ALLUM IN ORDER TO PROMOTE THE COAGULATION OF THE PARTICLES WHICH ALLOW THE TO SETTLE AND THE WATER TO BECOME LESS TURBID. IF TURBID WATER ENCOUNTERED DURING EXCAVATION OF THE PONDS, THE CONTRACTOR SHALL NOTIFY THE ENGINEER OF RECORD IMMEDIATELY TO DETERMINE THE COURSE OF ACTION THAT IS APPROPRIATE TO ELIMINATE THE TURBITY AND ALLOW DISCHARGE THAT MEET WATER QUALITY STANDARDS.
5. THE CONTRACTOR SHALL SEQUENCE THE EXCAVATION OF THE STORMWATER PONDS SUCH THAT A SEDIMENT BASIN WILL BE AVAILABLE AT ALL TIMES. THE SEDIMENT BASIN CAN BE RELOCATED AS NECESSARY SUBJECT TO THE WATER WITHIN THE SEDIMENT BASIN BEING NON-TURBID AND ACCEPTABLE FOR DISCHARGE OFF-SITE.

F.D.O.T. RIGHT-OF-WAY WORK

1. EXISTING DRAINAGE STRUCTURES WITHIN CONSTRUCTION LIMITS SHALL REMAIN UNLESS OTHERWISE NOTED.
2. SPECIAL ATTENTION IS DIRECTED TO THE FACT THAT PORTIONS OF SOME DRAINAGE STRUCTURES EXTEND INTO THE STABILIZED PORTION OF THE ROADBED AND EXTREME CAUTION WILL BE NECESSARY IN STABILIZATION OPERATIONS AT THESE LOCATIONS.
3. ALL DRAINAGE PIPES SHALL BE STEEL REINFORCED CONCRETE PIPE, CLASS III, UNLESS OTHERWISE NOTED.
4. ANY PUBLIC LAND CORNER WITHIN THE LIMITS OF CONSTRUCTION IS TO BE PROTECTED. IF A CORNER MONUMENT IS IN DANGER OF BEING DESTROYED AND HAS NOT BEEN PROPERLY REFERENCED, THE ENGINEER SHOULD NOTIFY THE DISTRICT LOCATION SURVEYOR, WITHOUT DELAY, BY TELEPHONE.
5. EXISTING DRIVEWAYS WITHIN THE LIMITS OF THIS PROJECT ARE TO BE REPLACED AT THE SAME LOCATION AND WIDTH, UNLESS OTHERWISE SHOWN ON PLANS.
6. THE CONTRACTOR SHALL REMOVE ANY ORGANIC AND PLASTIC MATERIAL ENCOUNTERED IN THE FIELD IN ACCORDANCE WITH FDOT DESIGN STANDARDS (ED. 2014) INDEX No. 500. COST OF REMOVAL OF ORGANIC AND PLASTIC MATERIAL AND BACKFILL OF SUITABLE MATERIAL IN ACCORDANCE WITH INDEX No. 505 SHALL BE INCLUDED IN THE COST OF REGULAR EXCAVATION.
7. THE LOCATION(S) OF THE UTILITIES SHOWN IN THE PLANS ARE BASED ON LIMITED INVESTIGATION TECHNIQUES AND SHOULD BE CONSIDERED APPROXIMATE ONLY. THE VERIFIED LOCATIONS/ELEVATIONS APPLY ONLY AT THE POINTS SHOWN. INTERPOLATIONS BETWEEN THESE POINTS HAVE NOT BEEN VERIFIED.
8. EXISTING UTILITIES ARE TO REMAIN IN PLACE UNLESS OTHERWISE NOTED.
9. THE CONTRACTOR SHALL NOTIFY ALL UTILITY COMPANIES, DURING STANDARD 'BUSINESS HOURS', A MINIMUM OF TWO WORKING DAYS PRIOR TO EXCAVATION AS REQUIRED BY CHAPTER 77-153 OF THE FLORIDA STATUES.
10. THE INFORMATION SHOWN ON THESE DRAWINGS CONCERNING TYPE AND LOCATION OF UNDERGROUND AND OTHER UTILITIES IS BASED ON AVAILABLE RECORDS AND SURVEYS BUT IS NOT GUARANTEED TO BE ACCURATE OR ALL INCLUSIVE. THE CONTRACTOR SHALL MAKE HIS OWN DETERMINATION AS TO THE TYPE AND LOCATIONS OF UTILITIES AS MAY BE NECESSARY TO AVOID DAMAGE THERETO AND PROTECT EXISTING UTILITY FACILITIES DURING CONSTRUCTION. THE CONTRACTOR IS RESPONSIBLE FOR COORDINATING UTILITY RELOCATION WITH UTILITY OWNERS.
11. ALL MAINTENANCE OF TRAFFIC ITEMS REQUIRED BY THE 600 SERIES INDICES (ED. 2014) SHALL BE FURNISHED, INSTALLED, AND MAINTAINED TO PROPERLY MAINTAIN TRAFFIC AND ADDRESS DROP OFF CRITERIA IN THE WORK ZONE.
12. NO LANES CLOSED BETWEEN THE HOURS OF 6:00 AM TO 9:00 AM AND 3:00 PM TO 6:00 PM.
13. ANY EXISTING OR PROPOSED SIGNS THAT CONFLICT WITH THE TRAFFIC CONTROL PLANS SHALL BE REMOVED OR COVERED BY THE CONTRACTOR PER INDEX 600 AND WHEN THE CONFLICT NO LONGER EXISTS THE SIGNS SHALL BE RESTORED TO THEIR ORIGINAL POSITION. COST SHALL BE INCLUDED IN MAINTENANCE OF TRAFFIC.
14. IF ONLY STANDARD FDOT INDICES (SUCH AS #'S. 612, 613) WILL BE USED, THEN THE CONTRACTOR WILL NOT BE REQUIRED TO PROVIDE SIGNED AND SEALED MAINTENANCE OF TRAFFIC PLANS. IF THE CONTRACTOR REQUIRES OTHER THAN THE STANDARD FDOT INDICES THEN THE CONTRACTOR WILL HAVE TO SUBMIT SIGNED AND SEALED PLANS TO FDOT FOR REVIEW AND APPROVAL.
15. MAINTENANCE OF TRAFFIC SHALL BE MAINTAINED IN ACCORDANCE WITH FDOT DESIGN STANDARDS (ED. 2014), THE STANDARDS SPECIFICATION FOR ROAD AND BRIDGE CONSTRUCTION (ED. 2014), AND THE MANUAL OF UNIFORM TRAFFIC CONTROL DEVICES (MUTCD) AS A MINIMUM.
16. MAINTENANCE OF TRAFFIC TO BE SUPERVISED BY A PERSON CERTIFIED IN FDOT M.O.T.
17. THE CONTRACTOR SHALL NOTIFY THE DEPARTMENT OF TRANSPORTATION A MINIMUM OF TWO BUSINESS DAYS PRIOR TO CLOSING ANY LANES OR BEGINNING ANY CONSTRUCTION WITHIN THE FDOT RIGHT-OF-WAY.
18. TEST RESULTS OF ANY TESTS TAKEN FOR OR DURING CONSTRUCTION OF THE PERMITTED WORK SHALL BE PROVIDED TO THE FDOT UPON REQUEST.
19. IF THE DEPARTMENT DETERMINES THAT AS-BUILT CONDITIONS VARY SIGNIFICANTLY FROM APPROVED PLANS, THE PERMITTEE OR THE PERMITTEE'S CONTRACTOR SHALL PROVIDE AS-BUILT PLANS, ALONG WITH A RECORD DRAWINGS REPORT BY PERMITTEE'S PROFESSIONAL ENGINEER, FORM 850-040-19, WITHIN 30 DAYS OF COMPLETING CONSTRUCTION.
20. ALL DISTURBED AREAS WITHIN FDOT RIGHT-OF-WAY MUST BE SODDED ONLY WITH COMMON BERMUDA SOD.
21. CONTRACTORS CERTIFICATE OF LIABILITY INSURANCE MUST BE ISSUED PRIOR TO STARTING CONSTRUCTION IN FDOT RIGHT-OF-WAY.
22. MAINTENANCE OF TRAFFIC TO BE SUPERVISED BY A PERSON CERTIFIED IN FDOT M.O.T.
23. ALL WORK PERFORMED WITHIN FDOT RIGHT-OF-WAY SHALL BE IN ACCORDANCE WITH FDOT DESIGN STANDARDS (ED. 2014), STANDARD SPECIFICATIONS FOR ROAD AND BRIDGE CONSTRUCTION (ED. 2014), AND THE UTILITY ACCOMMODATION MANUAL (ED. 2010).
24. IT WILL BE THE RESPONSIBILITY OF THE PERMITTEE TO REPAIR ANY DAMAGE TO FDOT FACILITIES CAUSED BY CONSTRUCTION OF THE PROJECT.
25. ALL SIDEWALK CLOSURES SHALL ABIDE TO THE STANDARD PROCEDURES PER FDOT DESIGN STANDARDS (ED. 2014), INDEX #660.

EARTHWORK / DEMUCKING PROCEDURES

1. A GEOTECHNICAL ENGINEERING INVESTIGATION REPORT HAS BEEN PREPARED FOR PURPOSES OF STORM WATER DESIGN, OF WHICH COPIES ARE AVAILABLE THROUGH THE OWNER OR THEIR SOIL TESTING COMPANY. A GEOTECHNICAL ENGINEER SHALL BE RETAINED BY THE CONTRACTOR TO PROVIDE ON-SITE INSPECTIONS DURING EXCAVATION/FILL OPERATIONS AND TESTING OF THE COMPACTED FILL SO THAT PROPER DOCUMENTATION OF THE REQUIRED COMPACTING CRITERIA CAN BE PROVIDED.
2. ALL EXISTING DEBRIS (ABOVE OR BELOW GROUND), CONSTRUCTION DEBRIS AND OTHER WASTE MATERIAL SHALL BE DISPOSED OF OFF-SITE BY THE CONTRACTOR, IN ACCORDANCE WITH APPLICABLE REGULATORY AGENCY REQUIREMENTS IN A LEGAL MANNER.
3. THE CONTRACTOR SHALL INSURE THAT PROPER SOIL DENSITIES ARE ACHIEVED FOR PLACEMENT OF ALL HEADWALL/ENDWALL FOOTINGS, RETAINING WALL FOOTINGS, AND IN GENERAL, ANY FOOTING SUPPORT DESCRIBED ON THESE PLANS. IT WILL ALSO BE THE RESPONSIBILITY OF THE CONTRACTOR TO INSURE THAT SUFFICIENT SOILS TESTING HAS BEEN PERFORMED PRIOR TO FINAL INSTALLATION OF IMPROVEMENTS.
4. ANY UNSUITABLE ORGANIC SOIL SHALL BE EXCAVATED TO A MINIMUM MARGIN OF 6 FEET BEYOND ITS PERIPHERY EXCAVATED TO EXPOSE THE UNDERLYING NON-ORGANIC FINE SAND.
5. IF DETERMINED NECESSARY, DEWATERING DURING EXCAVATING/BACKFILLING OPERATIONS MAY BE ACCOMPLISHED BY DITCHING AND THE USE OF SUMP PUMPS AND/OR OTHER METHODS (WELL POINTS), AS NECESSARY. CONTRACTOR TO OBTAIN ALL REQUIRED PERMITS FOR DEWATERING ACTIVITIES THAT MAY BE REQUIRED.
6. UPON APPROVAL OF THE GEOTECHNICAL ENGINEER, THE EXCAVATED AREAS MAY BE BACKFILLED WITH CLEAN FINE SAND FREE OF UNSUITABLE OR DELETERIOUS MATERIAL. HOWEVER, THE FILL SHOULD NOT BE PLACED IN MORE THAN 6 INCHES OF STANDING WATER. ONCE THE FILL IS AT LEAST 2 FEET ABOVE THE DEWATERED LEVEL, BACKFILLING MAY PROCEED AS DIRECTED BY THE GEOTECHNICAL ENGINEER.
7. CONTRACTOR TO FOLLOW THE GUIDANCE OF THE REFERENCED GEOTECHNICAL ENGINEERING INVESTIGATION REPORT OR INDICATE WHETHER ON-SITE GEOTECHNICAL ENGINEER SHALL DETERMINE DEPTH OF DEMUCKING AND/OR REMOVAL OF UNSUITABLE FILL.

PAVEMENT MARKING AND SIGNAGE

1. THE INSTALLATION, SHAPE, AND SIZE OF ALL SIGNS AND THEIR LETTERING SHALL COMPLY WITH THE LATEST EDITIONS OF THE U.S. DEPARTMENT OF TRANSPORTATION "MANUAL ON UNIFORM TRAFFIC CONTROL DEVICES, ED. 2009" (MUTCD), AND THE F.D.O.T. "STANDARD SPECIFICATIONS FOR ROAD AND BRIDGE CONSTRUCTION, ED. 2013", AND THE F.D.O.T. "DESIGN STANDARDS FOR DESIGN, CONSTRUCTION, MAINTENANCE, AND UTILITY OPERATIONS ON THE STATE HIGHWAY SYSTEM, ED. 2013". WHERE CONFLICTS EXIST BETWEEN THE PLANS AND THE ABOVE MENTIONED SPECIFICATIONS, THE MORE STRINGENT CRITERIA SHALL PREVAIL.
2. STOP BARS AND STOP SIGNS ARE TO BE PROVIDED AT ALL INTERNAL, ONSITE INTERSECTIONS, WITH THE EXCEPTION OF SIGNALIZED INTERSECTIONS (UNLESS OTHERWISE NOTED).
3. ALL PAVEMENT MARKINGS SHALL COMPLY WITH THE 2012 F.D.O.T. STANDARD INDEX (ED. 2013) #17346.

CALL 48 HOURS BEFORE YOU DIG

IT'S THE LAW! DIAL 811

811 Know what's below. Call before you dig.

SUNSHINE STATE ONE CALL OF FLORIDA, INC.

No.	REVISIONS	DATE	BY
1	REVISED PER CLIENT	01/26/15	RWS
2	REVISED PER COMMENTS	02/19/15	RWS

Kimley»Horn

© 2014 KIMLEY-HORN AND ASSOCIATES, INC.
3660 MAGUIRE BOULEVARD, SUITE 200, ORLANDO, FL 32803
PHONE: 407-898-1511
WWW.KIMLEY-HORN.COM CA 00000696

KHA PROJECT 049372008
DATE 08/08/2014
SCALE AS SHOWN
DESIGNED BY RWS
DRAWN BY RWS
CHECKED BY JRJ

LICENSED PROFESSIONAL JAY R. JACKSON, P.E.
FLORIDA LICENSE NUMBER 54247
DATE FEB 24 2015

JAY R. JACKSON LICENSE No. 54247 STATE OF FLORIDA PROFESSIONAL ENGINEER

GENERAL NOTES

LADY LAKE CROSSING

TOWN OF LADY LAKE FLORIDA

SHEET NUMBER C1.1

Plotted By: Spence, Robert Sheet Set: LadyLakeRetailCrossing Layout: C1.1 GENERAL NOTES February 24, 2015 08:10:02am K:\ORL_Civil\049372008-Lady Lake Crossing Retail\CADD\CONST\PlanSheets\C1.0-C1.1 GENERAL NOTES.dwg
This document, together with the concepts and designs presented herein, as an instrument of service, is intended only for the specific purpose and client for which it was prepared. Reuse of and improper reliance on this document without written authorization and adaptation by Kimley-Horn and Associates, Inc. shall be without liability to Kimley-Horn and Associates, Inc.

STORMWATER POLLUTION PREVENTION PLAN

SITE DESCRIPTION

PROJECT NAME AND LOCATION

LADY LAKE CROSSING
TAX PARCEL: 08-18-24-1000-000-0600 & 08-18-24-1001-000-0200
TOWN OF LADY LAKE, FLORIDA

*SEE COVER SHEET FOR LOCATION MAP

DEVELOPER NAME AND ADDRESS

THE BENCHMARK GROUP
4053 MAPLE ROAD
AMHURST, NY 14226
CONTACT: MARTIN J. DELLEBOVI
PHONE: (706) 833-4986

PROJECT DESCRIPTION

LADY LAKE CROSSING INFRASTRUCTURE ENCOMPASSES A 7.67 ACRE SITE WITH A 0.60 ACRE OUTPARCEL TRACT FOR A TOTAL PROJECT AREA OF 8.27 ACRES. THE SITE IS LOCATED AT THE SOUTHEAST CORNER OF FENNELL BOULEVARD AND US27/SR441.

PROJECT AREA: 8.27 ACRES

DISCHARGE POINT LOCATED AT APPROX:
LAT. 28° 55' 38" N
LONG. 81° 55' 57" W

ULTIMATE RECEIVING WATERS: EXISTING MASTER SYSTEM DRY RETENTION POND

ACTIVITIES THAT REQUIRE EROSION CONTROL

SITE CLEARING AND GRUBBING; PROVIDING A STABILIZED CONSTRUCTION ENTRANCE, PERIMETER, AND OTHER EROSION AND SEDIMENT CONTROLS; EXCAVATION FOR THE RETENTION POND; SITE GRADING; INSTALLATION OF STORM WATER, SANITARY SEWER, AND WATER STRUCTURES; CURB, ROADWAYS, AND PARKING FACILITIES.

*SEE PLANS FOR THE LOCATION OF TEMPORARY SEDIMENT BARRIERS AND OTHER EROSION CONTROL METHODS.

SOIL PARAMETERS

SOIL TYPES:

SERIES NAME	HYDROLOGIC GROUP
CANDLER FINE SAND	A

SEQUENCE OF MAJOR ACTIVITIES

THE ORDER OF CONSTRUCTION IS AS FOLLOWS:

1. PROVIDE STABILIZED CONSTRUCTION ENTRANCE
2. INSTALL SILT FENCES AND OTHER EROSION CONTROL METHODS
3. CLEAR AND GRUB FOR SEDIMENT BASIN AND EARTH DIKE
4. CONSTRUCT EARTH DIKE AND SEDIMENT BASIN
5. FINISH CLEARING AND GRUBBING
6. REMOVE AND STORE TOPSOIL
7. PROVIDE INITIAL GRADING AS REQUIRED
8. STABILIZE ALL DISTURBED AREAS AS SOON AS POSSIBLE
9. INSTALL UTILITIES, STORM SEWER, CURB AND GUTTER
10. INSTALL BASE TO ROAD AND PARKING AREA
11. FINISH GRADING ENTIRE SITE
12. CONSTRUCT FINAL PAVING
13. REMOVE ACCUMULATED SEDIMENT
14. REMOVE ANY ITEMS THAT ARE NOT REQUIRED

TIMING OF CONTROL MEASURES

THE INSTALLATION OF SILT FENCE (AND OTHER EROSION CONTROL MEASURES), A STABILIZED ENTRANCE AND SEDIMENT BASIN SHALL OCCUR PRIOR TO CLEARING AND GRUBBING ACTIVITY. AFTER CONSTRUCTION IS COMPLETE, THE ACCUMULATED SEDIMENT SHALL BE REMOVED AND THE AREAS SHALL BE REGRADED AND PERMANENTLY STABILIZED AS SHOWN ON THE PLANS.

EROSION AND SEDIMENT CONTROLS

BEST MANAGEMENT PRACTICES SHALL BE USED FOR THIS PROJECT TO CONTROL EROSION AND TURBIDITY CAUSED BY STORM WATER RUN-OFF. THE LOCATION AND DETAILS OF EROSION CONTROL METHODS ARE SHOWN ON THE PLANS. THE CONTRACTOR IS RESPONSIBLE FOR PLACING AND MAINTAINING THESE CONTROL METHODS AS SHOWN ON THE PLANS OR AS REQUIRED. HE/SHE SHALL ALSO PROVIDE THE REQUIRED EROSION PROTECTION AS REQUIRED BY LOCAL, STATE AND FEDERAL LAW.

STORM WATER MANAGEMENT

STORM WATER COLLECTION SHALL BE PROVIDED BY CATCH BASINS. THE AREAS THAT ARE REGRADED BUT NOT DEVELOPED SHALL BE STABILIZED IMMEDIATELY AFTER REGRADING. THE POND SYSTEM HAS BEEN DESIGNED TO KEEP PEAK FLOW RATES FROM THE MEAN ANNUAL AND TWENTY FIVE YEAR/24 HOUR STORMS AT THEIR PRE-DEVELOPMENT RATES.

STABILIZATION PRACTICES:

TEMPORARY STABILIZATION - TOPSOIL STOCK PILES AND DISTURBED PORTIONS OF THE SITE WHERE CONSTRUCTION ACTIVITY TEMPORARILY OR PERMANENTLY CEASE, SHALL BE STABILIZED WITH TEMPORARY SEED AND MULCH WITHIN 7 DAYS OF THE LAST CONSTRUCTION ACTIVITY IN THAT AREA. THE TEMPORARY SEED REQUIRED CAN BE FOUND IN TABLE 1.65 A OF THE FLORIDA DEVELOPMENT MANUAL. PRIOR TO SEEDING, WHERE SOILS ARE ACIDIC 2 TONS OF PULVERIZED AGRICULTURAL LIMESTONE SHOULD BE ADDED PER ACRE AND 450 POUNDS OF 10-20-20 FERTILIZER SHALL BE APPLIED TO EACH ACRE. AFTER SEEDING, EACH AREA SHALL BE IMMEDIATELY MULCHED WITH STRAW OR EQUIVALENT EQUAL. AREAS OF THE SITE WHICH ARE TO BE PAVED SHALL BE TEMPORARILY STABILIZED BY APPLYING GEOTEXTILE AND STONE SUB-BASE UNTIL BITUMINOUS PAVEMENT CAN BE APPLIED.

PERMANENT STABILIZATION - DISTURBED PORTIONS OF THE SITE WHERE CONSTRUCTION ACTIVITIES PERMANENTLY CEASE SHALL BE STABILIZED WITH PERMANENT SEED NO LATER THAN 7 DAYS AFTER THE LAST CONSTRUCTION ACTIVITY. THE APPROPRIATE PERMANENT SEED MIX CAN BE FOUND IN TABLES 1.66A, 1.66B AND 1.66C OF THE FLORIDA DEVELOPMENT MANUAL. PRIOR TO SEEDING, 2 TONS/ACRE OF FINELY GROUND AGRICULTURAL LIMESTONE AND THE PROPER FERTILIZER BASED ON THE TYPE OF SEEDING SHALL BE APPLIED TO EACH ACRE TO PROVIDE PLANT NUTRIENTS. AFTER SEEDING, EACH AREA SHALL BE MULCHED IMMEDIATELY.

STRUCTURAL PRACTICES:

EARTH DIKE - IF REQUIRED, AN EARTH DIKE SHALL BE CONSTRUCTED ALONG THE SITE PERIMETER. A PORTION OF THE DIKE SHALL DIVERT RUN-ON AROUND THE CONSTRUCTION SITE. THE REMAINING PORTION OF THE DIKE SHALL COLLECT RUNOFF FROM THE DISTURBED AREA AND DIRECT THE RUNOFF TO THE SEDIMENT BASIN.

SEDIMENT BASIN - A SEDIMENT BASIN SHALL BE CONSTRUCTED IN THE COMMON DRAINAGE AREA FOR THE SITE. ALL SEDIMENT COLLECTED IN THE BASIN MUST BE REMOVED FROM THE BASIN UPON COMPLETION OF CONSTRUCTION. SEDIMENT FROM THE BASIN MAY BE USED AS FILL ON THE SITE IF IT IS SUITABLE SOIL.

WASTE DISPOSAL

WASTE MATERIALS - ALL WASTE MATERIALS SHALL BE COLLECTED AND STORED IN A METAL DUMPSTER WITH A SECURE LID IN ACCORDANCE WITH ALL LOCAL AND STATE LAWS. ALL TRASH AND CONSTRUCTION DEBRIS FROM THE SITE SHALL BE DEPOSITED IN THE DUMPSTER. THE SUPERINTENDENT SHALL COORDINATE WITH THE LOCAL UTILITIES TO HAVE THE DUMPSTER EMPTIED AT LEAST TWICE A WEEK AND THE WASTE TAKEN TO AN APPROPRIATE LANDFILL. NO CONSTRUCTION WASTE MATERIALS SHALL BE BURIED ON SITE. THE SUPERINTENDENT SHALL ORGANIZE TRAINING FOR THE EMPLOYEES IN THE PROPER PRACTICES WHEN DEALING WITH WASTE MATERIALS. THE SUPERINTENDENT SHALL BE RESPONSIBLE FOR POSTING AND ENFORCING WASTE MATERIAL PROCEDURES.

HAZARDOUS WASTE - HAZARDOUS WASTE MATERIALS SHALL BE DISPOSED OF IN ACCORDANCE WITH ALL LOCAL AND STATE LAWS OR AS DIRECTED BY THE MANUFACTURER. THE SUPERINTENDENT SHALL ORGANIZE THE PROPER TRAINING FOR EMPLOYEES IN THE PROPER PRACTICES WHEN DEALING WITH HAZARDOUS WASTE MATERIALS. THESE PROCEDURES SHALL BE POSTED ON THE SITE. THE PERSON WHO MANAGES THE SITE SHALL BE RESPONSIBLE FOR ENFORCING THE PROCEDURES.

SANITARY WASTE - SANITARY WASTE SHALL BE COLLECTED AND DISPOSED OF IN ACCORDANCE WITH ALL LOCAL AND STATE LAWS. THE SUPERINTENDENT SHALL COORDINATE WITH THE LOCAL UTILITY FOR COLLECTION OF THE SANITARY WASTE AT LEAST THREE TIMES A WEEK TO PREVENT SPILLAGE ONTO THE SITE.

OFF-SITE TRACKING

A STABILIZED CONSTRUCTION ENTRANCE SHALL BE PROVIDED TO REDUCE SEDIMENT TRACKING OFFSITE. THE MAJOR ROAD CONNECTED TO THE PROJECT SHALL BE CLEANED ONCE A DAY TO REMOVE ANY EXCESS MUD, DIRT OR ROCK RESULTING FROM CONSTRUCTION TRAFFIC. ALL TRUCKS HAULING MATERIALS OFFSITE SHALL BE COVERED WITH A TARPAULIN.

ITEMS REQUIRING POLLUTION PREVENTION

THE FOLLOWING ITEMS ARE EXPECTED TO BE PRESENT ON THE PROJECT SITE:

- -ASPHALT
- -CONCRETE
- -FERTILIZERS
- -METAL PIECES
- -PETROLEUM BASED PRODUCTS
- -TAR
- -CLEANING SUPPLIES
- -DETERGENTS
- -MASONARY BLOCK/BRICKS
- -PAINT
- -WOOD

THE FOLLOWING ARE NON-STORM WATER SOURCES THAT WILL BE ENCOUNTERED AT THE SITE AND SHOULD BE DIRECTED TO THE SEDIMENT BASIN PRIOR TO DISCHARGE:

-UNCONTAMINATED GROUNDWATER EXPOSED DURING EXCAVATION
-WATER FROM WATER LINE FLUSHING
-PAVEMENT WASH WATERS (WHERE NO SPILLS OR LEAKS OF TOXIC OR HAZARDOUS MATERIALS HAVE OCCURRED).

SPILL PREVENTION AND CONTROL

THE FOLLOWING ARE THE MATERIAL MANAGEMENT PRACTICES THAT WILL BE USED TO REDUCE THE RISK OF SPILLS OR OTHER ACCIDENTAL EXPOSURE OF MATERIALS AND SUBSTANCES TO STORM WATER RUNOFF.

GOOD HOUSEKEEPING

-SUPERINTENDENT SHALL INSPECT PROJECT AREA DAILY FOR PROPER STORAGE, USE, AND DISPOSAL OF CONSTRUCTION MATERIALS.

-STORE ONLY ENOUGH MATERIAL ON SITE FOR PROJECT COMPLETION.

-ALL SUBSTANCES SHOULD BE USED BEFORE DISPOSAL OF CONTAINER.

-ALL CONSTRUCTION MATERIALS STORED SHALL BE ORGANIZED AND IN THE PROPER CONTAINER AND IF POSSIBLE, STORED UNDER A ROOF OR PROTECTIVE COVER.

-PRODUCTS SHALL NOT BE MIXED UNLESS DIRECTED BY THE MANUFACTURER.

-ALL PRODUCTS SHALL BE USED AND DISPOSED OF ACCORDING TO THE MANUFACTURER'S RECOMMENDATIONS.

HAZARDOUS PRODUCTS

-MATERIALS SHOULD BE KEPT IN ORIGINAL CONTAINER WITH LABELS UNLESS THE ORIGINAL CONTAINERS CANNOT BE RESEALED. IF ORIGINAL CONTAINERS CANNOT BE USED, LABELS AND PRODUCT INFORMATION SHALL BE SAVED.

-PROPER DISPOSAL PRACTICES SHALL ALWAYS BE FOLLOWED IN ACCORDANCE WITH MANUFACTURER AND LOCAL/STATE REGULATIONS.

PRODUCT SPECIFIC PRACTICES

-PETROLEUM PRODUCTS MUST BE STORED IN PROPER CONTAINERS AND CLEARLY LABELED. VEHICLES CONTAINING PETROLEUM PRODUCTS SHALL BE PERIODICALLY INSPECTED FOR LEAKS. PRECAUTIONS SHALL BE TAKEN TO AVOID LEAKAGE OF PETROLEUM PRODUCTS ON SITE.

-THE MINIMUM AMOUNT OF FERTILIZER SHALL BE USED AND MIXED INTO THE SOIL IN ORDER TO LIMIT EXPOSURE TO STORM WATER. FERTILIZERS SHALL BE STORED IN A COVERED SHED. THE CONTENTS OF ANY PARTIALLY USED BAGS OF FERTILIZER SHALL BE TRANSFERRED TO A SEALABLE PLASTIC BIN TO AVOID SPILLS.

-PAINT CONTAINERS SHALL BE SEALED AND STORED WHEN NOT IN USE. EXCESS PAINT MUST BE DISPOSED OF IN AN APPROVED MANNER.

-CONCRETE TRUCKS SHALL NOT BE ALLOWED TO WASH OUT OR DISCHARGE SURPLUS CONCRETE OR DRUM WASH WATER ON THE SITE.

SPILL CONTROL PRACTICES

IN ADDITION TO THE GOOD HOUSEKEEPING AND MATERIAL MANAGEMENT PRACTICES DISCUSSED IN THE PREVIOUS SECTIONS OF THIS PLAN, THE FOLLOWING PRACTICES SHALL BE FOLLOWED FOR SPILL PREVENTION AND CLEANUP:

-SPILL CLEANUP INFORMATION SHALL BE POSTED ON SITE TO INFORM EMPLOYEES ABOUT CLEANUP PROCEDURES AND RESOURCES.

-THE FOLLOWING CLEAN-UP EQUIPMENT MUST BE KEPT ON-SITE NEAR THE MATERIAL STORAGE AREA: GLOVES, MOPS, RAGS, BROOMS, DUST PANS, SAND, SAWDUST, LIQUID ABSORBER, GOGGLES, AND TRASH CONTAINERS.

-ALL SPILLS SHALL BE CLEANED UP AS SOON AS POSSIBLE.

-WHEN CLEANING A SPILL, THE AREA SHOULD BE WELL VENTILATED AND THE EMPLOYEE SHALL WEAR PROPER PROTECTIVE COVERING TO PREVENT INJURY.

-TOXIC SPILLS MUST BE REPORTED TO THE PROPER AUTHORITY REGARDLESS OF THE SIZE OF THE SPILL.

-AFTER A SPILL, THE PREVENTION PLAN SHALL BE REVIEWED AND CHANGED TO PREVENT FURTHER SIMILAR SPILLS FROM OCCURRING. THE CAUSE OF THE SPILL, MEASURES TO PREVENT IT, AND HOW TO CLEAN THE SPILL UP SHALL BE RECORDED.

-THE SUPERINTENDENT SHALL BE THE SPILL PREVENTION AND CLEANUP COORDINATOR AND IS RESPONSIBLE FOR THE DAY TO DAY SITE OPERATIONS. THE SUPERINTENDENT ALSO OVERSEES THE SPILL PREVENTION PLAN AND SHALL BE RESPONSIBLE FOR EDUCATING THE EMPLOYEES ABOUT SPILL PREVENTION AND CLEANUP PROCEDURES.

MAINTENANCE AND INSPECTION PRACTICES

THE FOLLOWING ARE MAINTENANCE AND INSPECTION PRACTICES THAT SHALL BE COMPLETED BY THE CONTRACTOR:

-ALL SEDIMENT AND EROSION CONTROL METHODS SHALL BE CHECKED DAILY AND AFTER EACH 0.5 INCH OR GREATER RAINFALL BY THE SUPERINTENDENT OR SOMEONE UNDER HIS/HER DIRECT SUPERVISION.

-ALL SEDIMENT AND EROSION CONTROL METHODS SHALL BE KEPT IN GOOD CONDITION. REPAIRS MUST BE MADE WITHIN 24 HOURS OF REPORT.

-THE SILT FENCE SHALL BE INSPECTED PERIODICALLY FOR HEIGHT OF SEDIMENT AND CONDITION OF FENCE.

-THE SILT FENCE SHALL BE CLEARED OF SEDIMENT WHEN SEDIMENT MEASURES ONE-THIRD THE HEIGHT OF THE FENCE.

-THE SEDIMENT BASINS/DITCHES SHALL BE CHECKED MONTHLY FOR DEPTH OF SEDIMENT. THEY SHALL BE CLEANED WHEN SEDIMENT REACHES 10% OF TOTAL CAPACITY AND AFTER CONSTRUCTION IS COMPLETE.

-DIVERSION DIKES SHALL BE INSPECTED MONTHLY. ANY BREACHES SHALL BE PROMPTLY REPAIRED.

-ALL SEEDING SHALL BE CHECKED FOR PROPER GROWTH AND UNIFORMITY. UNSTABALIZED AREAS SHALL BE RE-SODDED.

-A MAINTENANCE REPORT SHALL BE COMPLETED DAILY AFTER EACH INSPECTION OF THE SEDIMENT AND EROSION CONTROL METHODS. THE REPORTS SHALL BE FILED IN AN ORGANIZED MANNER AND RETAINED ON-SITE DURING CONSTRUCTION. AFTER CONSTRUCTION IS COMPLETED, THE REPORTS SHALL BE SAVED FOR AT LEAST THREE YEARS. THE REPORTS SHALL BE AVAILABLE FOR ANY AGENCY THAT HAS JURISDICTION OVER EROSION CONTROL.

-THE SUPERINTENDENT SHALL ORGANIZE THE TRAINING FOR INSPECTION PROCEDURES AND PROPER EROSION CONTROL METHODS FOR EMPLOYEES THAT COMPLETE INSPECTIONS AND REPORTS.

POLLUTION PREVENTION PLAN CERTIFICATION

I CERTIFY UNDER PENALTY OF LAW THAT THIS DOCUMENT AND ALL ATTACHMENTS WERE PREPARED UNDER MY DIRECTION OR SUPERVISION IN ACCORDANCE WITH A SYSTEM DESIGNED TO ASSURE THAT QUALIFIED PERSONNEL PROPERLY GATHERED AND EVALUATED THE INFORMATION SUBMITTED. BASED ON MY INQUIRY OF THE PERSON OR PERSONS WHO MANAGE THE SYSTEM, OR THOSE PERSONS DIRECTLY RESPONSIBLE FOR GATHERING THE INFORMATION, THE INFORMATION SUBMITTED IS, TO THE BEST OF MY KNOWLEDGE AND BELIEF, TRUE, ACCURATE, AND COMPLETE. I AM AWARE THAT THERE ARE SIGNIFICANT PENALTIES FOR SUBMITTING FALSE INFORMATION, INCLUDING THE POSSIBILITY OF FINE AND IMPRISONMENT FOR KNOWING VIOLATIONS.

SIGNED: ____________ DATE: FEB 24 2015

JAY R. JACKSON, P.E.
FLORIDA REGISTRATION NUMBER: 54247
PROFESSIONAL ENGINEER

JAY R. JACKSON LICENSE No. 54247 STATE OF FLORIDA PROFESSIONAL ENGINEER

CONTRACTOR'S CERTIFICATION

I CERTIFY UNDER PENALTY OF LAW THAT I UNDERSTAND, SHALL COMPLY WITH, THE TERMS AND CONDITIONS OF THE STATE OF FLORIDA GENERIC PERMIT FOR STORMWATER DISCHARGE FORM LARGE AND SMALL CONSTRUCTION ACTIVITIES AND THIS STORMWATER POLLUTION PREVENTION PLAN PREPARED THEREUNDER.

SIGNATURE AND DATE	NAME AND TITLE, COMPANY / ADDRESS AND TELEPHONE NUMBER	RESPONSIBILITY

No.	REVISIONS	DATE	BY
1	REVISED PER CLIENT	01/26/15	RWS
2	REVISED PER COMMENTS	02/19/15	RWS

Kimley»Horn

© 2014 KIMLEY-HORN AND ASSOCIATES, INC.
3660 MAGUIRE BOULEVARD, SUITE 200, ORLANDO, FL 32803
PHONE: 407-898-1511
WWW.KIMLEY-HORN.COM CA 00000696

LICENSED PROFESSIONAL: JAY R. JACKSON
FLORIDA LICENSE NUMBER: 54247
DATE: FEB 24 2015

KHA PROJECT	049372008
DATE	08/08/2014
SCALE	AS SHOWN
DESIGNED BY	RWS
DRAWN BY	RWS
CHECKED BY	JRJ

STORMWATER POLLUTION PREVENTION PLAN

LADY LAKE CROSSING

TOWN OF LADY LAKE FLORIDA

SHEET NUMBER
C2.0

Plotted By:Spence, Robert Sheet Set:LadyLakeRetailCrossing Layout:C2.0-SWPPP February 24, 2015 08:10:50am K:\ORL_Civil\049372008-Lady Lake Crossing Retail\CADD\CONST\PlanSheets\C2.0-C2.1-SWPPP.dwg
This document, together with the concepts and designs presented herein, as an instrument of service, is intended only for the specific purpose and client for which it was prepared. Reuse of and improper reliance on this document without written authorization and adaptation by Kimley-Horn and Associates, Inc. shall be without liability to Kimley-Horn and Associates, Inc.

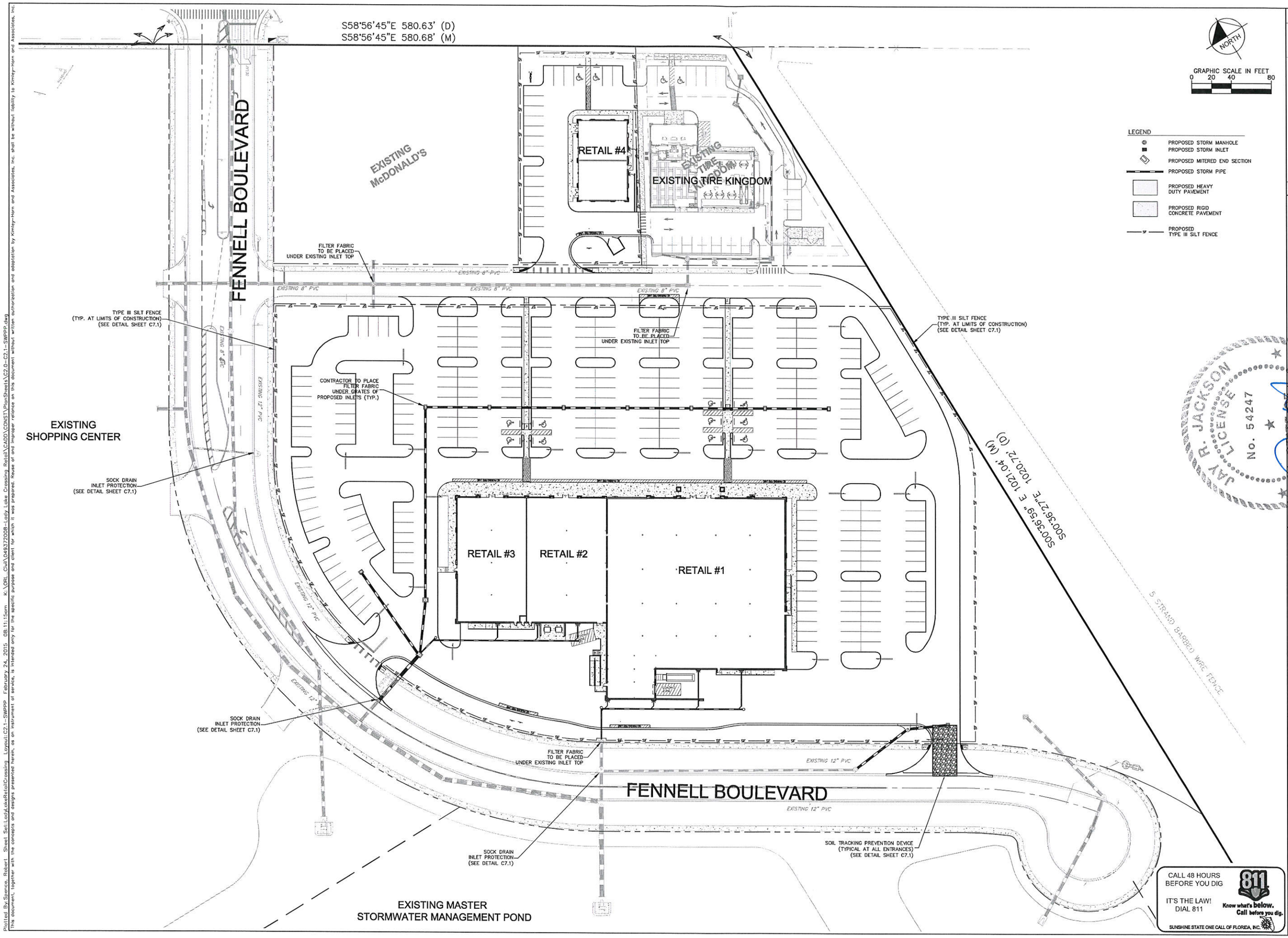

No.	REVISIONS	DATE	BY
1	REVISED PER CLIENT	01/26/15	RWS
2	REVISED PER COMMENTS	02/19/15	RWS

Kimley»Horn

© 2014 KIMLEY-HORN AND ASSOCIATES, INC.
3660 MAGUIRE BOULEVARD, SUITE 200, ORLANDO, FL 32803
PHONE: 407-898-1511
WWW.KIMLEY-HORN.COM CA 00000696

JAY R. JACKSON LICENSE No. 54247 PROFESSIONAL ENGINEER FEB 24 2015

KHA PROJECT 049372008
DATE 08/08/2014
SCALE AS SHOWN
DESIGNED BY RWS
DRAWN BY RWS
CHECKED BY JRJ

STORMWATER POLLUTION PREVENTION PLAN

LADY LAKE CROSSING

TOWN OF LADY LAKE FLORIDA

SHEET NUMBER C2.1

Plotted By:Spence, Robert Sheet Set:LadyLakeRetailCrossing Layout:C2.1-SWPPP February 24, 2015 08:11:15am K:\ORL_Civil\049372008-Lady Lake Crossing Retail\CADD\CONST\PlanSheets\C2.0-C2.1-SWPPP.dwg
This document, together with the concepts and designs presented herein, as an instrument of service, is intended only for the specific purpose and client for which it was prepared. Reuse of and improper reliance on this document without written authorization and adaptation by Kimley-Horn and Associates, Inc. shall be without liability to Kimley-Horn and Associates, Inc.

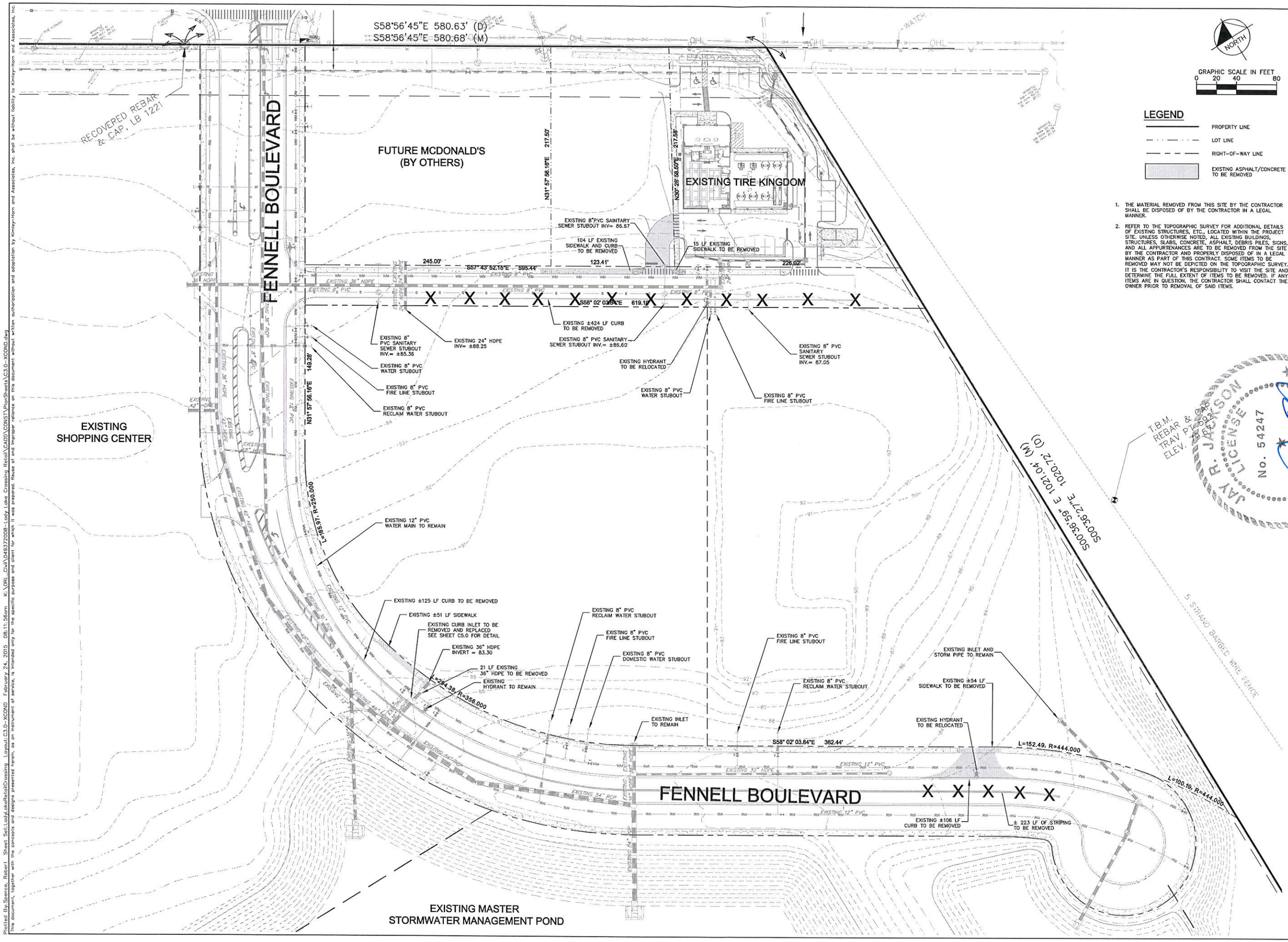

NORTH

GRAPHIC SCALE IN FEET
0 20 40 80

LEGEND

- PROPERTY LINE
- LOT LINE
- RIGHT-OF-WAY LINE
- EXISTING ASPHALT/CONCRETE TO BE REMOVED

1. THE MATERIAL REMOVED FROM THIS SITE BY THE CONTRACTOR SHALL BE DISPOSED OF BY THE CONTRACTOR IN A LEGAL MANNER.
2. REFER TO THE TOPOGRAPHIC SURVEY FOR ADDITIONAL DETAILS OF EXISTING STRUCTURES, ETC., LOCATED WITHIN THE PROJECT SITE. UNLESS OTHERWISE NOTED, ALL EXISTING BUILDINGS, STRUCTURES, SLABS, CONCRETE, ASPHALT, DEBRIS PILES, SIGNS, AND ALL APPURTENANCES ARE TO BE REMOVED FROM THE SITE BY THE CONTRACTOR AND PROPERLY DISPOSED OF IN A LEGAL MANNER AS PART OF THIS CONTRACT. SOME ITEMS TO BE REMOVED MAY NOT BE DEPICTED ON THE TOPOGRAPHIC SURVEY. IT IS THE CONTRACTOR'S RESPONSIBILITY TO VISIT THE SITE AND DETERMINE THE FULL EXTENT OF ITEMS TO BE REMOVED. IF ANY ITEMS ARE IN QUESTION, THE CONTRACTOR SHALL CONTACT THE OWNER PRIOR TO REMOVAL OF SAID ITEMS.

No.	REVISIONS	DATE	BY
1	REVISED PER CLIENT	01/26/15	RWS
2	REVISED PER COMMENTS	02/19/15	RWS

Kimley»Horn

© 2014 KIMLEY-HORN AND ASSOCIATES, INC.

3660 MAGUIRE BOULEVARD, SUITE 200, ORLANDO, FL 32803
PHONE: 407-898-1511 FAX: 407-896-1102
WWW.KIMLEY-HORN.COM CA 00000696

JAY R. JACKSON LICENSE No. 54247 STATE OF FLORIDA

FEB 24 2015

KHA PROJECT 049372008
DATE 08/06/2014
SCALE HAS BEEN CHANGED
DESIGNED BY RWS
DRAWN BY RWS
CHECKED BY JRJ

EXISTING CONDITIONS - DEMOLITION PLAN

LADY LAKE CROSSING

TOWN OF LADY LAKE FLORIDA

SHEET NUMBER
C3.0

Plotted By:Spence, Robert Sheet Set:LadyLakeRetailCrossing Layout:C3.0-XCOND February 24, 2015 08:11:56am K:\ORL_Civil\049372008-Lady Lake Crossing Retail\CADD\CONST\PlanSheets\C3.0-XCOND.dwg
This document, together with the concepts and designs presented herein, as an instrument of service, is intended only for the specific purpose and client for which it was prepared. Reuse of and improper reliance on this document without written authorization and adaptation by Kimley-Horn and Associates, Inc. shall be without liability to Kimley-Horn and Associates, Inc.

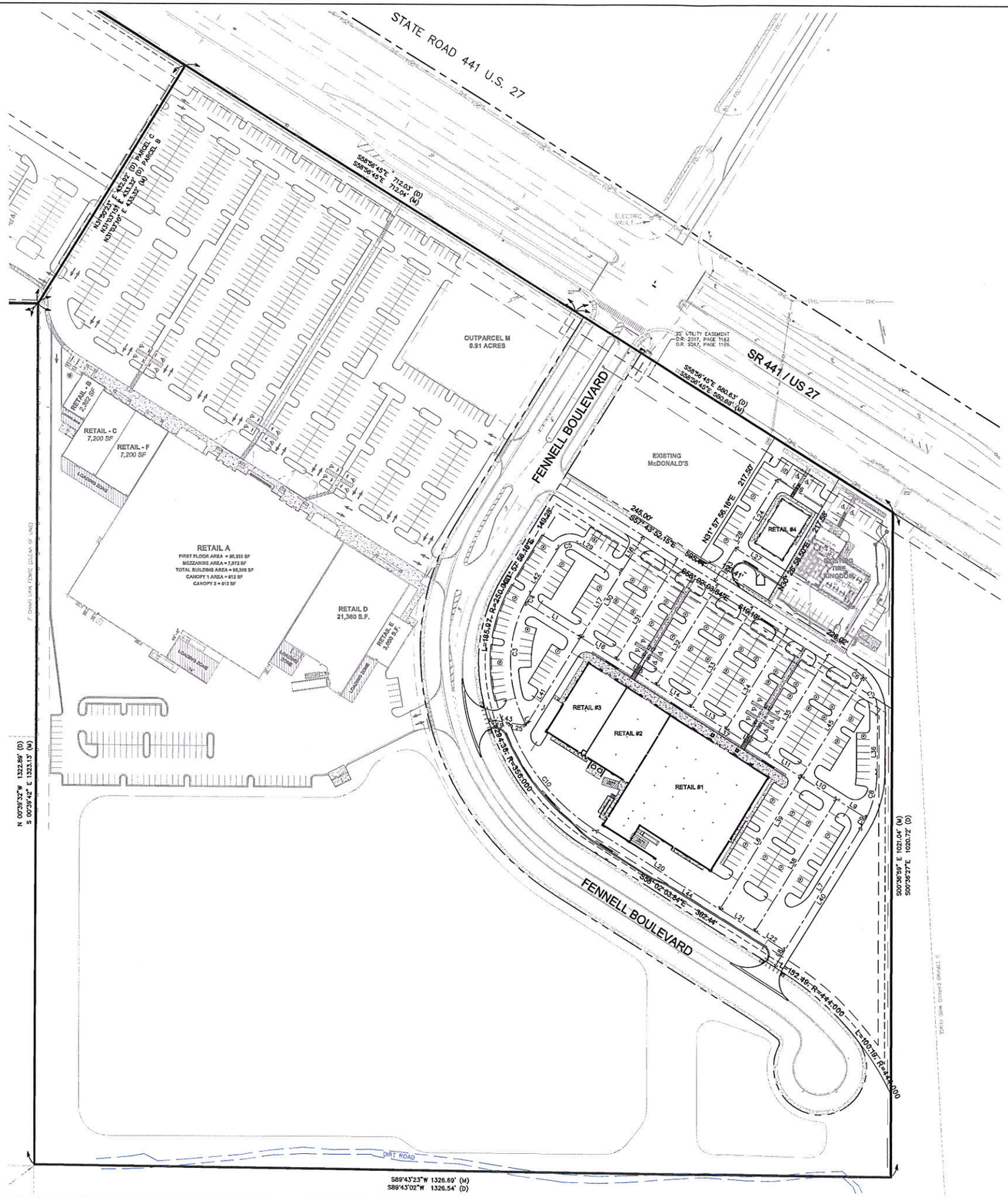

SITE DATA

TOTAL PROJECT AREA:	7.71 ACRES (336,065 SF)
EXISTING ZONING:	PUD
EXISTING LAND USE:	VACANT
PROPOSED LAND USE:	RETAIL
MAX BUILDING HEIGHT:	35 FEET
FLOOD ZONE:	ZONE X
PROPOSED BUILDING AREA:	54,780 SF
MAXIMUM FAR	0.3
FAR PROVIDED	0.16

PERVIOUS AREA:

PROVIDED:	91,432 SF (27.21% OF LEASABLE AREA)

IMPERVIOUS AREA:

PAVEMENT:	176,898 SF
CONCRETE:	12,957 SF
BUILDING AREA:	54,780 SF
TOTAL IMPERVIOUS AREA:	244,633 SF (72.79% OF LEASABLE AREA)

OPEN SPACE:

REQUIRED:	2.23 AC x 20% = 0.45 AC (19,462 SF)
PROVIDED:	2.18 AC (95,155 SF)

BUILDING SETBACKS:

FRONT (SR 441/US 27)	50 FEET
SIDE	20 FEET
REAR	10 FEET

PAVING SETBACKS:

FRONT	10 FEET
SIDE	10 FEET
REAR	10 FEET

REQUIRED PARKING:

GENERAL RETAIL – 1 SPACE/200 GFA: (50,782 GFA/200):	254 SPACES
TOTAL PARKING SPACES REQUIRED:	254 SPACES

PROVIDED PARKING:

REGULAR SPACES (10'x20'):	274 SPACES
HANDICAP SPACES:	12 SPACES
TOTAL SPACES PROVIDED	286 SPACES

NORTH

GRAPHIC SCALE IN FEET
0 40 80 160

CURVE TABLE						
CURVE	RADIUS	LENGTH	CHORD BEARING	CHORD	DELTA	TANGENT
C3	200.00'	185.38'	S1°11'25"W	178.82'	53°06'28"	99.95'
C4	200.00'	14.74'	S29°51'17"W	14.73'	4°13'17"	7.37'
C5	22.00'	34.56'	S76°57'56"W	31.11'	90°00'00"	22.00'
C6	78.00'	19.40'	N50°54'31"W	19.35'	14°15'05"	9.75'
C7	78.00'	60.01'	N21°44'38"W	58.54'	44°04'41"	31.58'
C8	162.00'	74.11'	N13°24'02"E	73.47'	26°12'40"	37.72'
C9	162.00'	15.44'	N29°14'09"E	15.43'	5°27'34"	7.72'
C10	326.00'	215.89'	S39°03'46"E	211.96'	37°56'35"	112.07'

LINE TABLE		
LINE	LENGTH	BEARING
L1	101.46	S58°02'03.84"E
L4	11.83	S25°21'49.02"E
L6	239.50	N31°57'56.16"E
L7	224.09	N31°57'56.16"E
L8	30.00	N31°57'56.16"E
L9	54.27	S58°02'03.84"E
L10	64.00	S58°02'03.84"E
L11	64.00	S58°02'03.84"E
L12	74.00	S58°02'03.84"E
L13	64.00	S58°02'03.84"E
L14	64.00	S58°02'03.84"E
L15	74.00	S58°02'03.84"E
L16	64.00	S58°02'03.84"E
L17	120.00	N31°57'56.16"E
L18	64.00	N31°57'56.16"E
L19	33.78	S81°24'32.86"E
L20	228.00	S58°02'03.84"E
L21	64.00	S58°02'03.84"E
L22	55.00	S58°02'03.84"E
L23	60.66	N31°57'56.16"E
L24	125.17	N31°57'56.16"E

LINE TABLE		
LINE	LENGTH	BEARING
L25	26.64	S81°24'32.86"E
L26	81.42	S58°02'03.84"E
L27	90.60	S58°02'03.84"E
L28	185.83	N31°57'56.16"E
L29	80.00	S58°02'03.84"E
L30	184.00	N31°57'56.16"E
L31	184.00	N31°57'56.16"E
L32	184.00	N31°57'56.16"E
L33	184.00	N31°57'56.16"E
L34	184.00	N31°57'56.16"E
L35	184.00	N31°57'56.16"E
L36	90.84	N0°17'42.22"E
L37	512.27	S58°02'03.84"E
L38	239.50	N31°57'56.16"E
L39	421.10	N31°57'56.16"E
L40	254.09	N31°57'56.16"E
L41	160.02	N31°57'56.16"E
L42	83.28	N31°57'56.16"E
L43	60.41	S81°24'32.86"E
L44	347.00	S58°02'03.84"E
L45	181.60	N31°57'56.16"E

NOTE:
L3 AND L5 PURPOSELY OMITTED

CALL 48 HOURS BEFORE YOU DIG

IT'S THE LAW! DIAL 811

811 Know what's below. Call before you dig.

SUNSHINE STATE ONE CALL OF FLORIDA, INC.

No.	REVISIONS	DATE	BY
1	REVISED PER CLIENT	01/26/15	RWS
2	REVISED PER COMMENTS	02/19/15	RWS

Kimley»Horn

© 2014 KIMLEY-HORN AND ASSOCIATES, INC.

3660 MAGUIRE BOULEVARD, SUITE 200, ORLANDO, FL 32803
PHONE: 407-898-1511 FAX: 407-898-1267
WWW.KIMLEY-HORN.COM CA 00000696

STATE OF FLORIDA
JAMES R. JACKSON
LICENSE
No. 54247
PROFESSIONAL ENGINEER

FEB 24 2015

KHA PROJECT 049372008
DATE 08/08/2014
SCALE AS SHOWN
DESIGNED BY RWS
DRAWN BY RWS
CHECKED BY JRJ

OVERALL SITE PLAN

LADY LAKE CROSSING

TOWN OF LADY LAKE FLORIDA

SHEET NUMBER
C4.0

Plotted By:Spence, Robert Sheet Set:LadyLakeRetailCrossing Layout:C4.0-OVERALL February 24, 2015 08:12:41am K:\ORL_Civil\049372008-Lady Lake Crossing\Dwgs\C4.0-OVERALL.dwg
This document, together with the concepts and designs presented herein, as an instrument of service, is intended only for the specific purpose and client for which it was prepared. Reuse of and improper reliance on this document without written authorization and adaptation by Kimley-Horn and Associates, Inc. shall be without liability to Kimley-Horn and Associates, Inc.

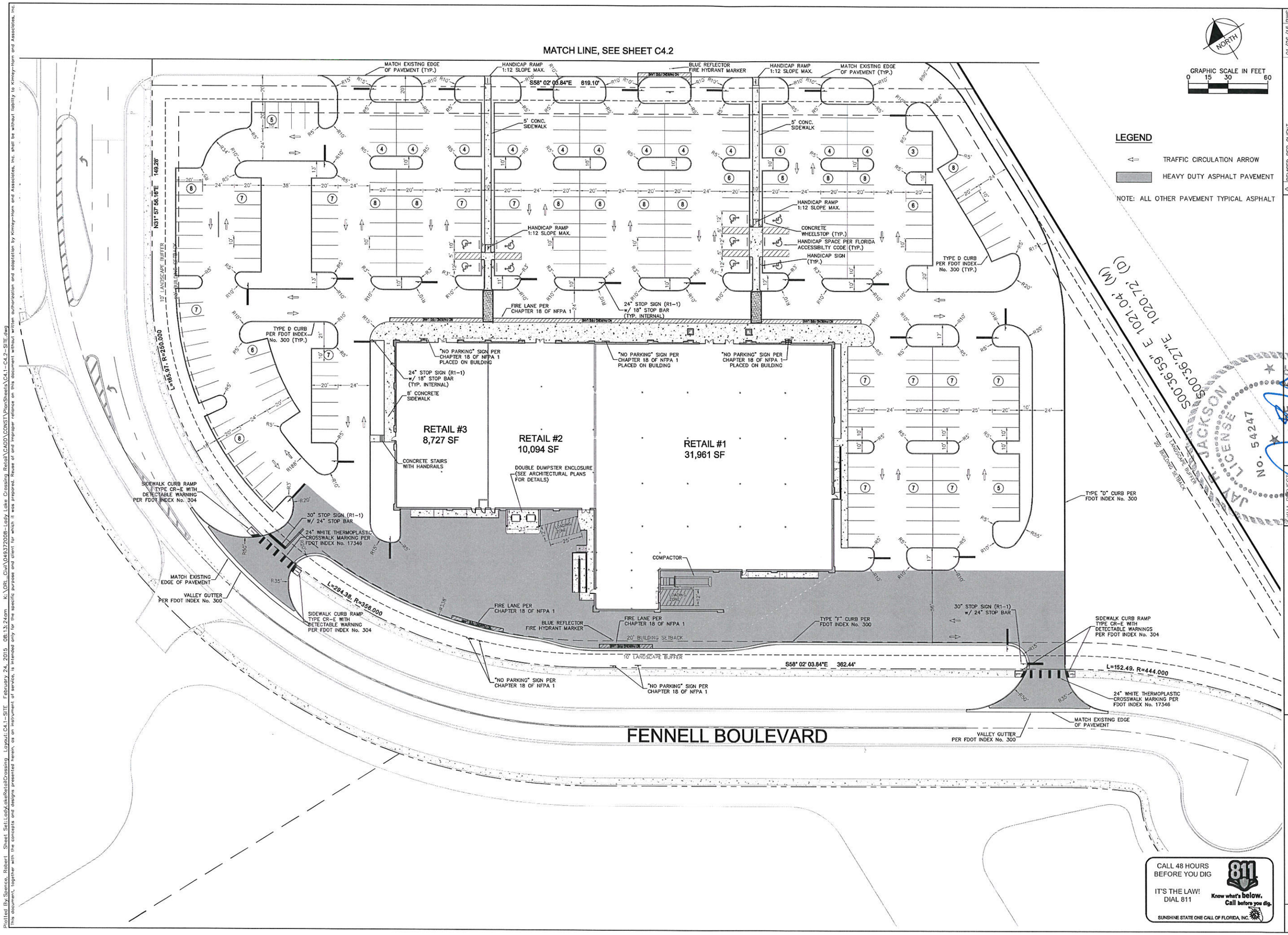

No.	REVISIONS	DATE	BY
1	REVISED PER CLIENT	01/26/15	RWS
2	REVISED PER COMMENTS	02/19/15	RWS

Kimley»Horn

© 2014 KIMLEY-HORN AND ASSOCIATES, INC.

3660 MAGUIRE BOULEVARD, SUITE 200, ORLANDO, FL 32803
PHONE: 407-898-1511
WWW.KIMLEY-HORN.COM CA 00000696

SITE PLAN

LADY LAKE CROSSING

TOWN OF LADY LAKE FLORIDA

SHEET NUMBER C4.1

Plotted By:Spence, Robert Sheet Set:LadyLakeRetailCrossing Layout:C4.1-SITE February 24, 2015 08:13:24am K:\ORL_Civil\049372008-Lady Lake Crossing Retail\CADD\CONST\PlanSheets\C4.1-C4.2-SITE.dwg
This document, together with the concepts and designs presented herein, as an instrument of service, is intended only for the specific purpose and client for which it was prepared. Reuse of and improper reliance on this document without written authorization and adaptation by Kimley-Horn and Associates, Inc. shall be without liability to Kimley-Horn and Associates, Inc.

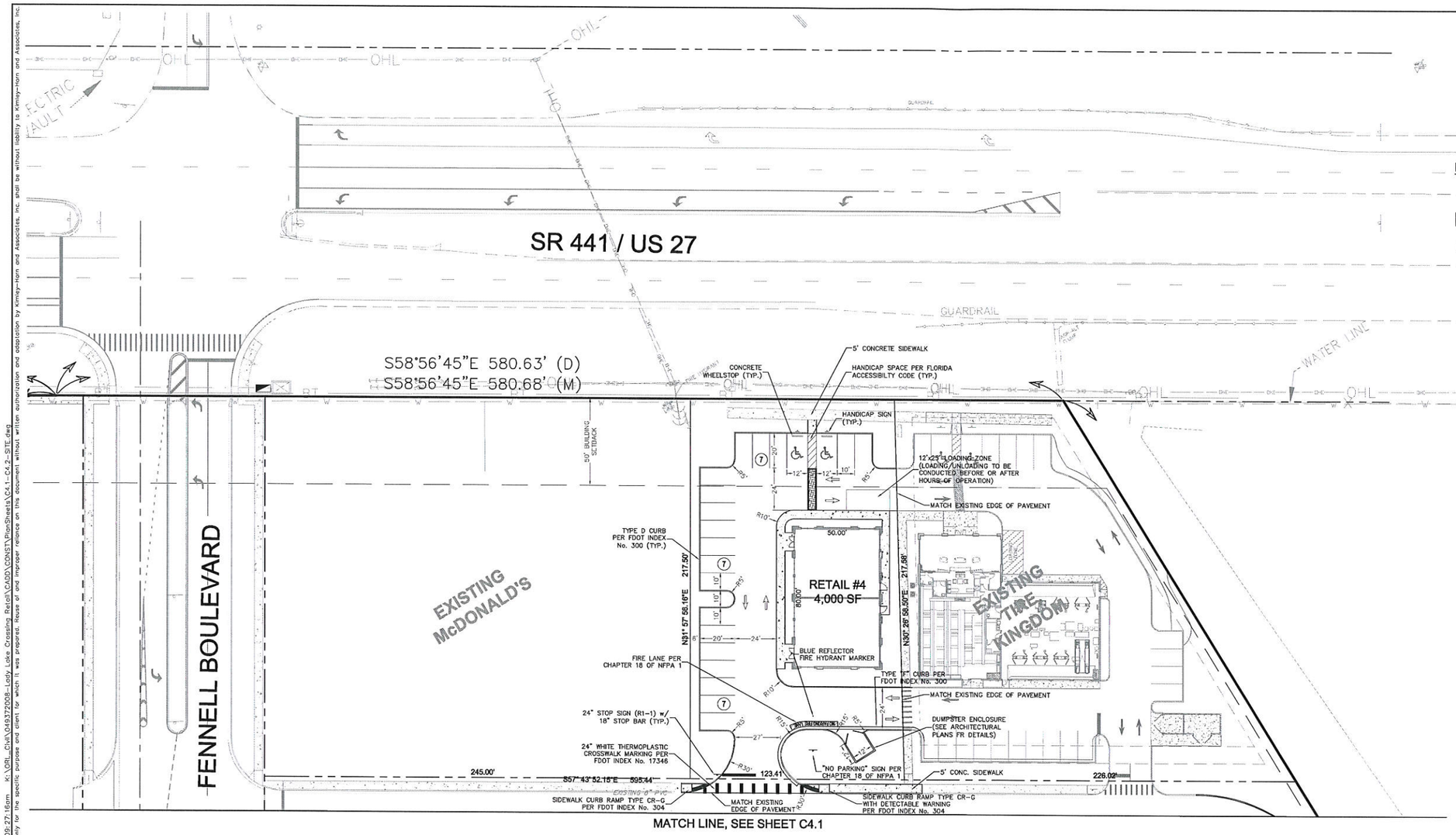

NORTH

GRAPHIC SCALE IN FEET
0 15 30 60

LEGEND

TRAFFIC CIRCULATION ARROW

HEAVY DUTY ASPHALT PAVEMENT

NOTE: ALL OTHER PAVEMENT TYPICAL ASPHALT

No.	REVISIONS	DATE	BY
1	REVISED PER CLIENT	01/26/15	RWS
2	REVISED PER COMMENTS	02/19/15	RWS

Kimley»Horn

© 2014 KIMLEY-HORN AND ASSOCIATES, INC.

3660 MAGUIRE BOULEVARD, SUITE 200, ORLANDO, FL 32803
PHONE: 407-898-1511 FAX: 407-898-1267
WWW.KIMLEY-HORN.COM CA 00000696

LICENSED PROFESSIONAL ENGINEER
JAY R. JACKSON
LICENSE NUMBER 54247
STATE OF FLORIDA
PROFESSIONAL ENGINEER
No. 54247

FEB 24 2015

K:\IA\PROJECT NUMBER
049372008
DATE
08/08/2014
SCALE AS SHOWN
DESIGNED BY RWS
DRAWN BY RWS
CHECKED BY JRJ
DATE FEB 24 2015

SITE PLAN

LADY LAKE CROSSING

TOWN OF LADY LAKE FLORIDA

SHEET NUMBER
C4.2

CALL 48 HOURS BEFORE YOU DIG

IT'S THE LAW! DIAL 811

811 Know what's below. Call before you dig.

SUNSHINE STATE ONE CALL OF FLORIDA, INC.

Plotted By:Spence, Robert Sheet Set:LadyLakeRetailCrossing Layout:C4.2-SITE February 24, 2015 09:27:16am K:\ORL-Civil\049372008-Lady Lake Crossing Retail\CADD\CONST\PlanSheets\C4.1-C4.2-SITE.dwg
This document, together with the concepts and designs presented herein, as an instrument of service, is intended only for the specific purpose and client for which it was prepared. Reuse of and improper reliance on this document without written authorization and adaptation by Kimley-Horn and Associates, Inc. shall be without liability to Kimley-Horn and Associates, Inc.

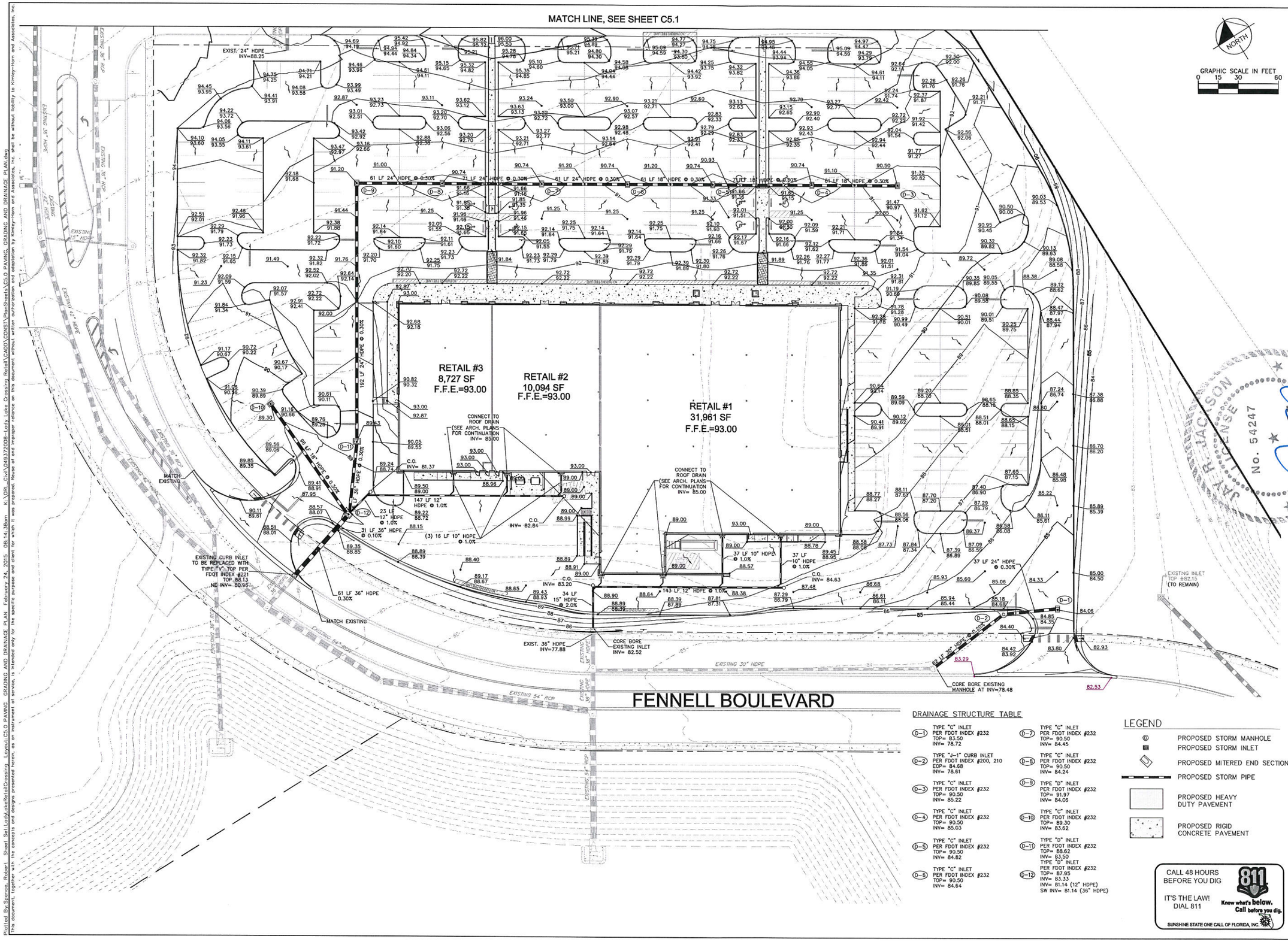

DRAINAGE STRUCTURE TABLE

D-1	TYPE "C" INLET PER FDOT INDEX #232 TOP= 83.50 INV= 78.72	D-7	TYPE "C" INLET PER FDOT INDEX #232 TOP= 90.50 INV= 84.45
D-2	TYPE "J-1" CURB INLET PER FDOT INDEX #200, 210 EOP= 84.68 INV= 78.61	D-8	TYPE "C" INLET PER FDOT INDEX #232 TOP= 90.50 INV= 84.24
D-3	TYPE "C" INLET PER FDOT INDEX #232 TOP= 90.50 INV= 85.22	D-9	TYPE "D" INLET PER FDOT INDEX #232 TOP= 91.97 INV= 84.06
D-4	TYPE "C" INLET PER FDOT INDEX #232 TOP= 90.50 INV= 85.03	D-10	TYPE "C" INLET PER FDOT INDEX #232 TOP= 89.30 INV= 83.62
D-5	TYPE "C" INLET PER FDOT INDEX #232 TOP= 90.50 INV= 84.82	D-11	TYPE "D" INLET PER FDOT INDEX #232 TOP= 88.62 INV= 83.50
D-6	TYPE "C" INLET PER FDOT INDEX #232 TOP= 90.50 INV= 84.64	D-12	TYPE "D" INLET PER FDOT INDEX #232 TOP= 87.95 INV= 83.33 INV= 81.14 (12" HDPE) SW INV= 81.14 (36" HDPE)

LEGEND

- PROPOSED STORM MANHOLE
- PROPOSED STORM INLET
- PROPOSED MITERED END SECTION
- PROPOSED STORM PIPE
- PROPOSED HEAVY DUTY PAVEMENT
- PROPOSED RIGID CONCRETE PAVEMENT

CALL 48 HOURS BEFORE YOU DIG

IT'S THE LAW! DIAL 811

811 Know what's below. Call before you dig.

SUNSHINE STATE ONE CALL OF FLORIDA, INC.

No.	REVISIONS	DATE	BY
1	REVISED PER CLIENT	01/26/15	RWS
2	REVISED PER COMMENTS	02/19/15	RWS

Kimley»Horn

© 2014 KIMLEY-HORN AND ASSOCIATES, INC.

3660 MAGUIRE BOULEVARD, SUITE 200, ORLANDO, FL 32803
PHONE: 407-898-1511
WWW.KIMLEY-HORN.COM CA 00000696

STATE OF FLORIDA PROFESSIONAL ENGINEER No. 54247 RICHARD W. JACKSON

FEB 24 2015

KHA PROJECT 049520008

DATE	08/08/2014
SCALE	AS SHOWN
DESIGNED BY	RWS
DRAWN BY	RWS
CHECKED BY	JRJ

PAVING, GRADING AND DRAINAGE PLAN

LADY LAKE CROSSING

TOWN OF LADY LAKE FLORIDA

SHEET NUMBER C5.0

Plotted By: Spencer, Robert Sheet Set:LadyLakeRetailCrossing Layout:C5.0 PAVING GRADING AND DRAINAGE PLAN February 24, 2015 08:14:38am K:\DRL_Civil\049372008-Lady Lake Crossing Retail\CADD\CONST\PlanSheets\C5.0 PAVING, GRADING AND DRAINAGE PLAN.dwg
This document, together with the concepts and designs presented herein, as an instrument of service, is intended only for the specific purpose and client for which it was prepared. Reuse of and improper reliance on this document without written authorization and adaptation by Kimley-Horn and Associates, Inc. shall be without liability to Kimley-Horn and Associates, Inc.

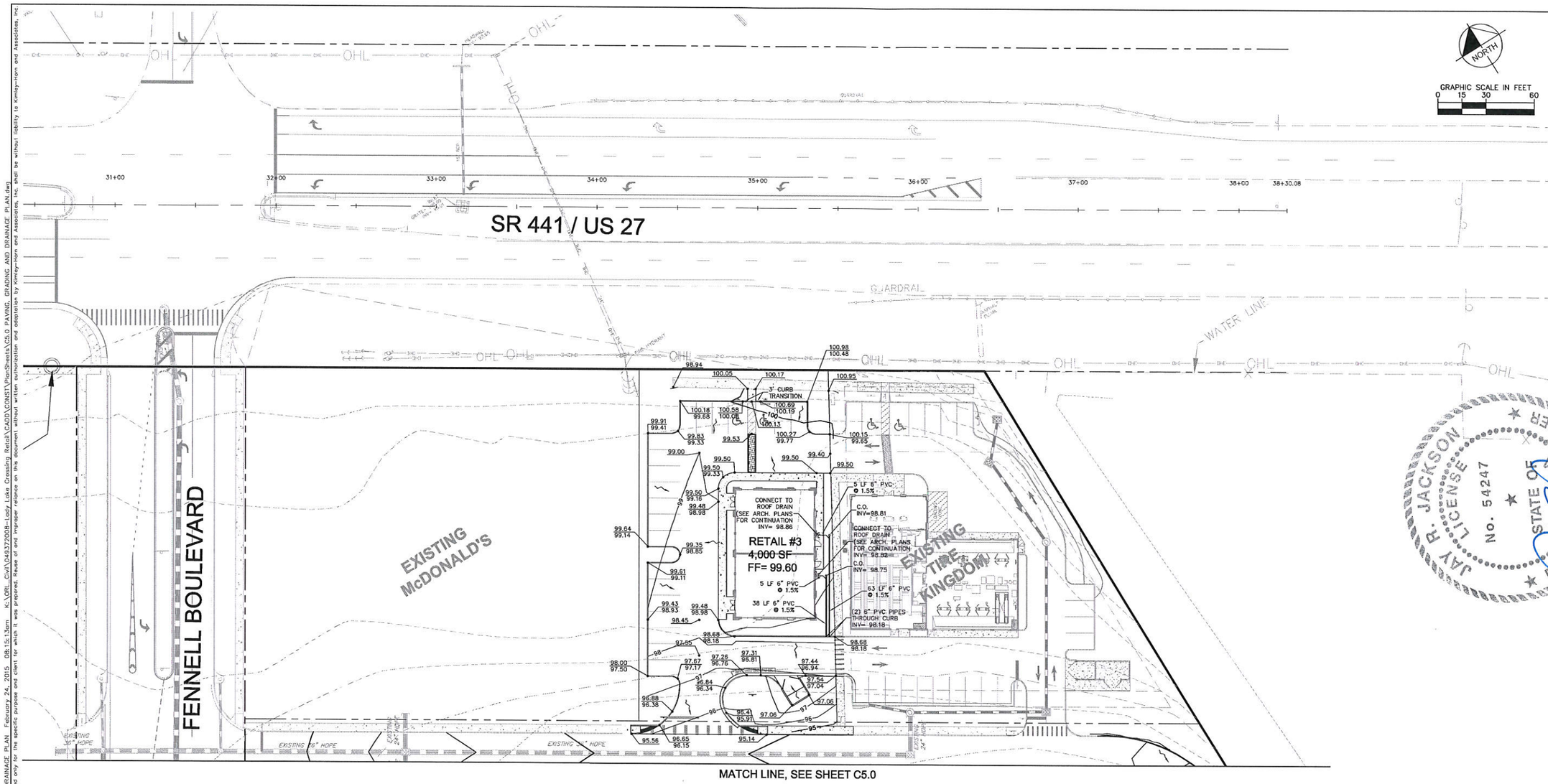

LEGEND

- PROPOSED STORM MANHOLE
- PROPOSED STORM INLET
- PROPOSED MITERED END SECTION
- PROPOSED STORM PIPE
- PROPOSED HEAVY DUTY PAVEMENT
- PROPOSED RIGID CONCRETE PAVEMENT

CALL 48 HOURS BEFORE YOU DIG

IT'S THE LAW! DIAL 811

811 Know what's below. Call before you dig.

SUNSHINE STATE ONE CALL OF FLORIDA, INC.

No.	REVISIONS	DATE	BY
1	REVISED PER CLIENT	01/26/15	RWS
2	REVISED PER COMMENTS	02/19/15	RWS

Kimley»Horn

© 2014 KIMLEY-HORN AND ASSOCIATES, INC.

3660 MAGUIRE BOULEVARD, SUITE 200, ORLANDO, FL 32803
PHONE: 407-898-1511
WWW.KIMLEY-HORN.COM CA 00000696

JAY R. JACKSON LICENSE No. 54247 STATE OF FLORIDA PROFESSIONAL ENGINEER

FEB 24 2015

FLORIDA LICENSE NUMBER 54247

KHA PROJECT 049372008

DATE 08/08/2014

SCALE AS SHOWN

DESIGNED BY RWS

DRAWN BY RWS

CHECKED BY JRJ

PAVING, GRADING AND DRAINAGE PLAN

LADY LAKE CROSSING

TOWN OF LADY LAKE FLORIDA

SHEET NUMBER C5.1

Plotted By:Spence, Robert Sheet Set:LadyLakeRetailCrossing Layout:C5.1 PAVING GRADING AND DRAINAGE PLAN February 24, 2015 08:15:13am K:\OFL_Civil\049372008-Lady Lake Crossing Retail\CADD\CONST\PlanSheets\C5.0 PAVING, GRADING AND DRAINAGE PLAN.dwg
This document, together with the concepts and designs presented herein, as an instrument of service, is intended only for the specific purpose and client for which it was prepared. Reuse of and improper reliance on this document without written authorization and adaptation by Kimley-Horn and Associates, Inc. shall be without liability to Kimley-Horn and Associates, Inc.

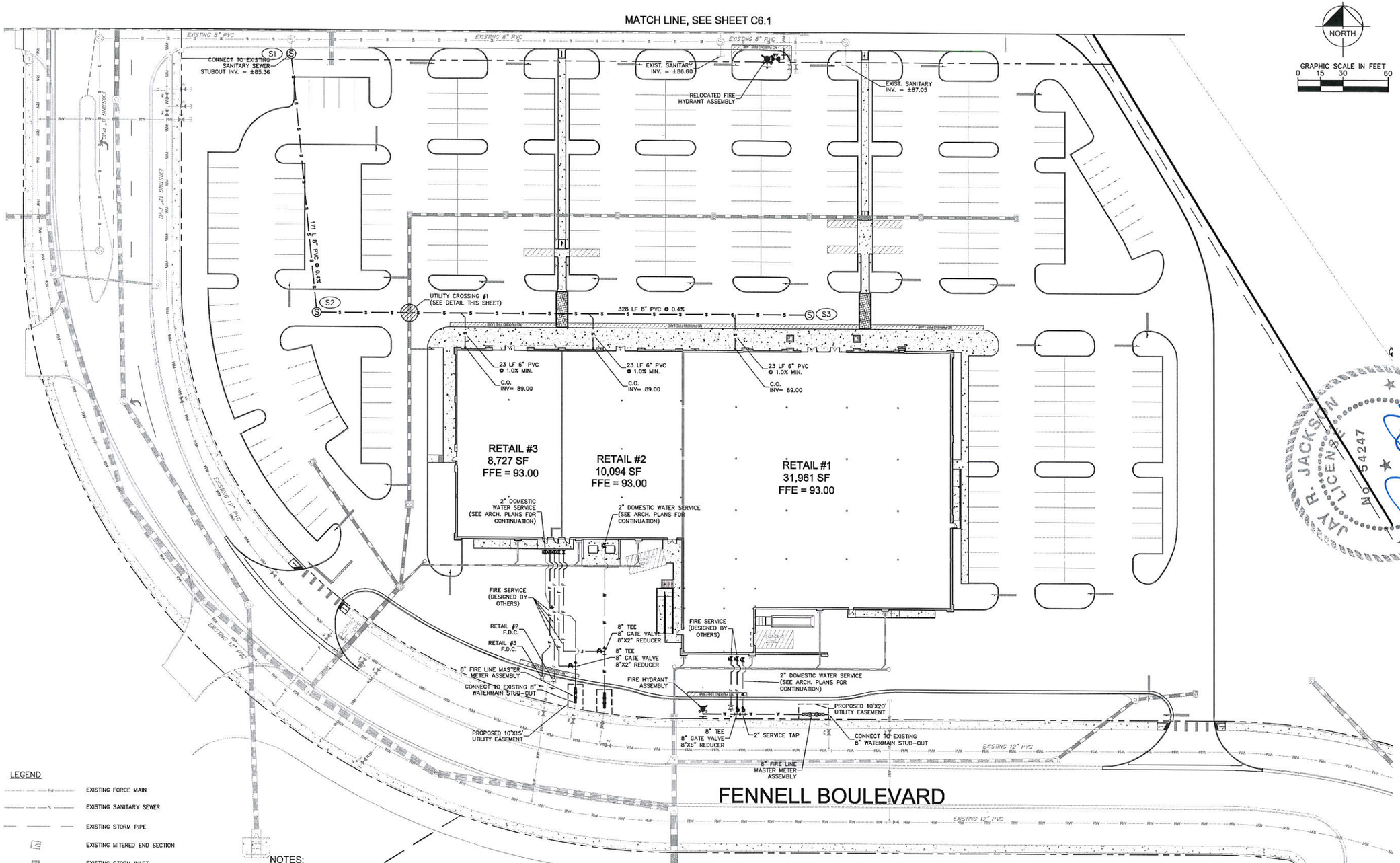

LEGEND

- EXISTING FORCE MAIN
- EXISTING SANITARY SEWER
- EXISTING STORM PIPE
- EXISTING MITERED END SECTION
- EXISTING STORM INLET
- EXISTING FIRE HYDRANT
- PROPOSED SANITARY LINE
- PROPOSED FORCE MAIN
- PROPOSED SANITARY MANHOLE
- PROPOSED STORM PIPE
- PROPOSED STORM INLET
- PROPOSED STORM MANHOLE
- PROPOSED MITERED END SECTION

NOTES:

1. ALL UTILITIES LOCATED OUTSIDE OF PUBLIC RIGHT-OF-WAYS SHALL BE PRIVATELY OWNED AND MAINTAINED.
2. METERS 2" AND UNDER ARE TO BE INSTALLED BY THE CITY OF LADY LAKE, BACKLFOW PREVENTORS ARE TO BE INSTALLED BY THE CONTRACTOR.
3. ALL WATER MAIN PIPE FITTINGS AND APPURTENANCES SHALL DUCTILE IRON AND BE INSTALLED TO COMPLY WITH TOWN OF LADY LAKE STANDARDS AND SPECIFICATIONS.
4. ALL HYDRANTS SHALL MEET THE CRITERIA SET FORTH BY TOWN OF LADY LAKE FIRE LOSS MANAGEMENT STANDARD 6008.
5. ALL WATER MAINS SHALL BE PRESSURE TESTED IN ACCORDANCE WITH AWWA MANUAL M23, CONCERNING HYDROSTATIC TESTING OF PVC PIPING. OFF-SITE UTILITIES HYDROSTATIC TESTING TO BE WITNESSED BY TOWN OF LADY LAKE WATER DEPARTMENT INSPECTOR.
6. ALL WATER MAINS SHALL BE STERILIZED IN ACCORDANCE WITH THE APPLICABLE SECTION OF THE LATEST AWWA SPECIFICATION C651 AND TOWN OF LADY LAKE WATER DEPARTMENT SPECIFICATIONS.
7. THE TOWN OF LADY LAKE DISPATCH OPERATOR SHALL BE NOTIFIED OF ANY BREAK OR DAMAGE TO THE GRAVITY SEWER OR WATER MAIN AT 836-2777.
8. ALL DAMAGE TO TOWN OF LADY LAKE'S MAINS SHALL BE REPAIRED IMMEDIATELY BY THE CONTRACTOR AT THE CONTRACTOR'S EXPENSE. IF THE REPAIR IS NOT MADE IN A TIMELY MANNER, AS DETERMINED BY THE TOWN OF LADY LAKE UTILITIES INSPECTOR, TOWN OF LADY LAKE MAY PERFORM REPAIRS AND THE CONTRACTOR WILL BE CHARGED FOR REPAIRS.
9. TOWN OF LADY LAKE UTILITIES GENERAL TELEPHONE NUMBERS: TOWN OF LADY LAKE UTILITIES CONSTRUCTION INSPECTION SECTION -- 836-7274, 836-6845. TOWN OF LADY LAKE UTILITIES WATER DIVISION -- 836-6800. TOWN OF LADY LAKE UTILITIES ENGINEERING DIVISION -- 836-7000.
10. THE TOWN OF LADY LAKE UTILITIES CONSTRUCTION SECTION (836-7274) SHALL BE NOTIFIED AT LEAST SEVEN (7) DAYS PRIOR TO ANY CONSTRUCTION ACTIVITY.
11. THE TOWN OF LADY LAKE WATER DIVISION (836-6800) AND THE TOWN OF LADY LAKE WASTEWATER DIVISION (836-6845) SHALL BE NOTIFIED AT LEAST (7) DAYS IN ADVANCE TO SCHEDULE MAIN TIE-INS AND VALVE OPERATIONS.
12. OPERATION OF TOWN OF LADY LAKE VALVES WATER, WASTEWATER, AND REUSE VALVES ARE TO BE OPERATED ONLY BY TOWN OF LADY LAKE UTILITIES INSPECTOR (836-7274). ALL VALVES BEING INSTALLED ARE TO REMAIN CLOSED DURING CONSTRUCTION.
13. THE CONTRACTOR SHALL COORDINATE ALL PUMP STATION OPERATION AND SHUT DOWN WITH AN TOWN OF LADY LAKE UTILITIES INSPECTOR (836-7274).
14. FIRE HYDRANTS SHALL BE INSTALLED PER NFPA 1. CONTRACTOR TO ENSURE THERE IS A MINIMUM CLEARANCE OF 4' ON THE SIDES AND 7.5' IN THE FRONT.
15. FIRE HYDRANTS SHALL BE COLOR CODED BASED ON THE FIRE FLOW TEST.

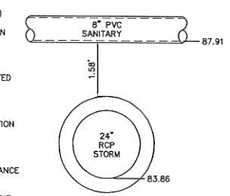

UTILITY CROSSING #1

SANITARY STRUCTURE TABLE

S1	SANITARY MANHOLE	TOP= 90.16 EX. N. INV.= ± 85.36 SE. INV.= 85.50
S2	SANITARY MANHOLE	TOP= 88.24 NW. INV.= 86.18 E. INV.= 86.28
S3	SANITARY MANHOLE	TOP= 88.91 W. INV.= 88.97

CALL 48 HOURS BEFORE YOU DIG

IT'S THE LAW! DIAL 811

811 Know what's below. Call before you dig.

SUNSHINE STATE ONE CALL OF FLORIDA, INC.

No.	REVISIONS	DATE	BY
1	REVISED PER CLIENT	01/26/15	RWS
2	REVISED PER COMMENTS	02/19/15	RWS

Kimley»Horn

© 2014 KIMLEY-HORN AND ASSOCIATES, INC.

3660 MAGUIRE BOULEVARD, SUITE 200, ORLANDO, FL 32803
PHONE: 407-898-1511
WWW.KIMLEY-HORN.COM CA 00000696

STATE OF FLORIDA LICENSED PROFESSIONAL ENGINEER JAY R. JACKSON No. 54247

FEB 27 2015

KHA PROJECT 049372001
DATE 08/06/2014
SCALE AS SHOWN
DESIGNED BY RWS
DRAWN BY RWS
CHECKED BY JRJ

UTILITY PLAN

LADY LAKE CROSSING

TOWN OF LADY LAKE FLORIDA

SHEET NUMBER C6.0

This document, together with the concepts and designs presented herein, as an instrument of service, is intended only for the specific purpose and client for which it was prepared. Reuse of and improper reliance on this document without written authorization and adaptation by Kimley-Horn and Associates, Inc. shall be without liability to Kimley-Horn and Associates, Inc.

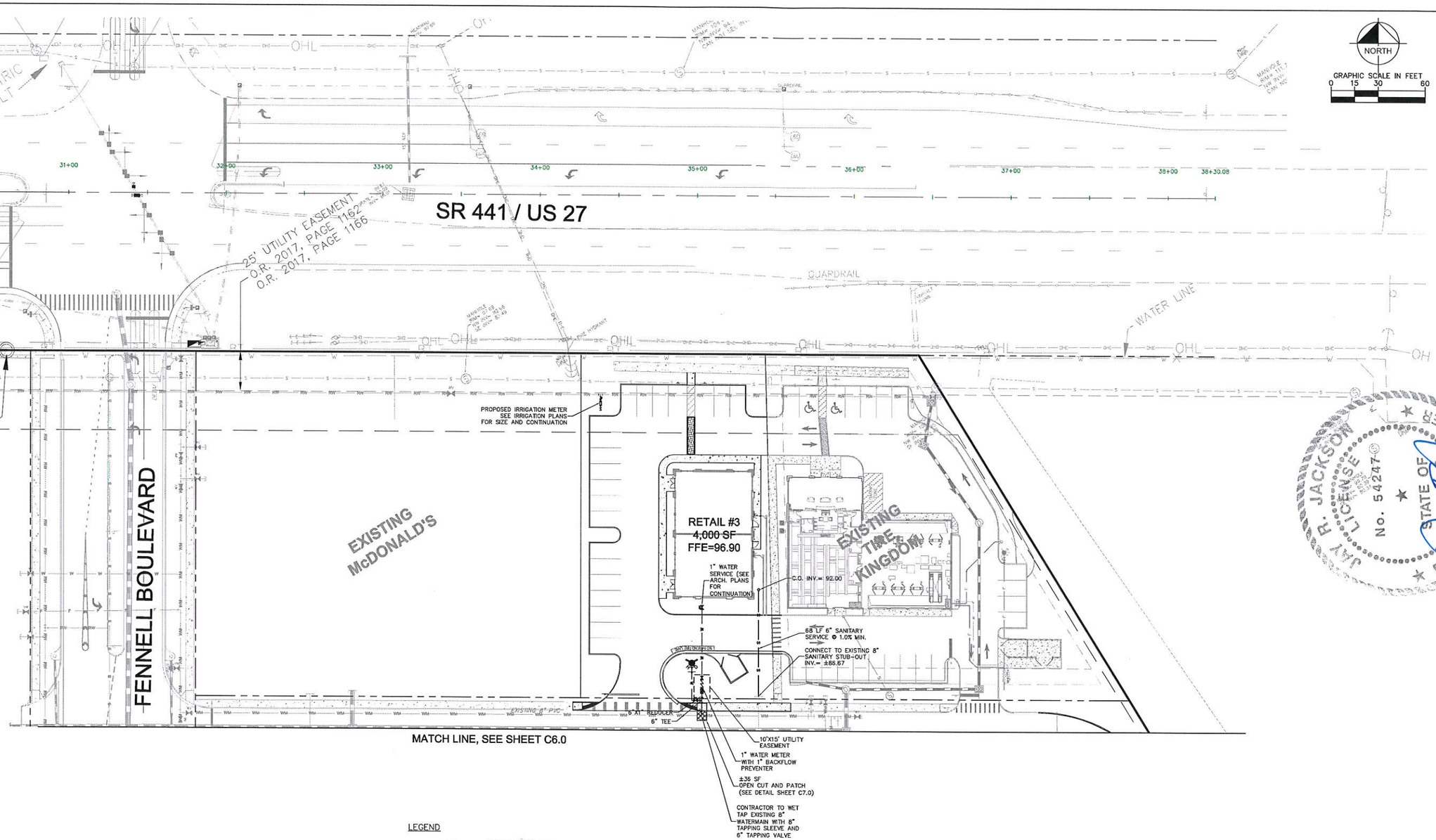

LEGEND

- EXISTING FORCE MAIN
- EXISTING SANITARY SEWER
- EXISTING STORM PIPE
- EXISTING MITERED END SECTION
- EXISTING STORM INLET
- EXISTING FIRE HYDRANT
- PROPOSED SANITARY LINE
- PROPOSED FORCE MAIN
- PROPOSED SANITARY MANHOLE
- PROPOSED STORM PIPE
- PROPOSED STORM INLET
- PROPOSED STORM MANHOLE
- PROPOSED MITERED END SECTION

NOTES:

1. ALL UTILITIES LOCATED OUTSIDE OF PUBLIC RIGHT-OF-WAYS SHALL BE PRIVATELY OWNED AND MAINTAINED.
2. METERS 2" AND UNDER ARE TO BE INSTALLED BY THE CITY OF LADY LAKE, BACKFLOW PREVENTORS ARE TO BE INSTALLED BY THE CONTRACTOR.
3. ALL WATER MAIN PIPE FITTINGS AND APPURTENANCES SHALL DUCTILE IRON AND BE INSTALLED TO COMPLY WITH TOWN OF LADY LAKE STANDARDS AND SPECIFICATIONS.
4. ALL HYDRANTS SHALL MEET THE CRITERIA SET FORTH BY TOWN OF LADY LAKE FIRE LOSS MANAGEMENT STANDARD 6006.
5. ALL WATER MAINS SHALL BE PRESSURE TESTED IN ACCORDANCE WITH AWWA MANUAL M23, CONCERNING HYDROSTATIC TESTING OF PVC PIPING. OFF-SITE UTILITIES HYDROSTATIC TESTING TO BE WITNESSED BY TOWN OF LADY LAKE WATER DEPARTMENT INSPECTOR.
6. ALL WATER MAINS SHALL BE STERILIZED IN ACCORDANCE WITH THE APPLICABLE SECTION OF THE LATEST AWWA SPECIFICATION C651 AND TOWN OF LADY LAKE WATER DEPARTMENT SPECIFICATIONS.
7. THE TOWN OF LADY LAKE DISPATCH OPERATOR SHALL BE NOTIFIED OF ANY BREAK OR DAMAGE TO THE GRAVITY SEWER OR WATER MAIN AT 836-2777.
8. ALL DAMAGE TO TOWN OF LADY LAKE'S MAINS SHALL BE REPAIRED IMMEDIATELY BY THE CONTRACTOR AT THE CONTRACTOR'S EXPENSE. IF THE REPAIR IS NOT MADE IN A TIMELY MANNER, AS DETERMINED BY THE TOWN OF LADY LAKE UTILITIES INSPECTOR, TOWN OF LADY LAKE MAY PERFORM REPAIRS AND THE CONTRACTOR WILL BE CHARGED FOR REPAIRS.
9. TOWN OF LADY LAKE UTILITIES GENERAL TELEPHONE NUMBERS: TOWN OF LADY LAKE UTILITIES CONSTRUCTION INSPECTION SECTION -- 836-7274. 836-6845. TOWN OF LADY LAKE UTILITIES WATER DIVISION -- 836-6800. TOWN OF LADY LAKE UTILITIES ENGINEERING DIVISION -- 836-7000.
10. THE TOWN OF LADY LAKE UTILITIES CONSTRUCTION SECTION (836-7274) SHALL BE NOTIFIED AT LEAST SEVEN (7) DAYS PRIOR TO ANY CONSTRUCTION ACTIVITY.
11. THE TOWN OF LADY LAKE WATER DIVISION (836-6800) AND THE TOWN OF LADY LAKE WASTEWATER DIVISION (836-6845) SHALL BE NOTIFIED AT LEAST (7) DAYS IN ADVANCE TO SCHEDULE MAIN TIE-INS AND VALVE OPERATIONS.
12. OPERATION OF TOWN OF LADY LAKE VALVES WATER, WASTEWATER, AND REUSE VALVES ARE TO BE OPERATED ONLY BY TOWN OF LADY LAKE UTILITIES INSPECTOR (836-7274). ALL VALVES BEING INSTALLED ARE TO REMAIN CLOSED DURING CONSTRUCTION.
13. THE CONTRACTOR SHALL COORDINATE ALL PUMP STATION OPERATION AND SHUT DOWN WITH AN TOWN OF LADY LAKE UTILITIES INSPECTOR (836-7274).
14. FIRE HYDRANTS SHALL BE INSTALLED PER NFPA 1. CONTACTOR TO ENSURE THERE IS A MINIMUM CLEARANCE OF 4' ON THE SIDES AND 7.5' IN THE FRONT.
15. FIRE HYDRANTS SHALL BE COLOR CODED BASED ON THE FIRE FLOW TEST.

CALL 48 HOURS BEFORE YOU DIG

IT'S THE LAW! DIAL 811

811 Know what's below. Call before you dig.

SUNSHINE STATE ONE CALL OF FLORIDA, INC.

No.	REVISIONS	DATE	BY
1	REVISED PER CLIENT	01/26/15	RWS
2	REVISED PER COMMENTS	02/19/15	RWS

Kimley»Horn

© 2014 KIMLEY-HORN AND ASSOCIATES, INC.

3660 MAGUIRE BOULEVARD, SUITE 200, ORLANDO, FL 32803
PHONE: 407-898-1511
WWW.KIMLEY-HORN.COM CA 00006696

JAY R. JACKSON LICENSE No. 54247 STATE OF FLORIDA

FEB 24 2015

KHA PROJECT 049372000
DATE 08/08/2014
SCALE AS SHOWN
DESIGNED BY RWS
DRAWN BY RWS
CHECKED BY JRJ

UTILITY PLAN

LADY LAKE CROSSING

TOWN OF LADY LAKE FLORIDA

SHEET NUMBER C6.1

This document, together with the concepts and designs presented herein, as an instrument of service, is intended only for the specific purpose and client for which it was prepared. Reuse of and improper reliance on this document without written authorization and adaptation by Kimley-Horn and Associates, Inc. shall be without liability to Kimley-Horn and Associates, Inc.

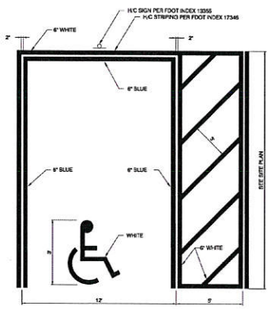

HANDICAP PARKING PAVEMENT MARKING
NTS

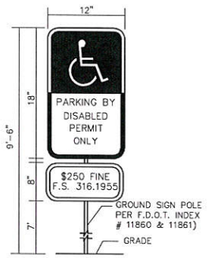

NOTES:

1. ALL LETTERS ARE 1" SERIES "C" PER MUTCD.
2. TOP PORTION OF SIGN SHALL HAVE REFLECTORIZED (ENGINEERING GRADE) BLUE BACKGROUND WITH WHITE REFLECTORIZED LEGEND AND BORDER.
3. BOTTOM PORTION OF SIGN SHALL HAVE A REFLECTORIZED (ENGINEERING GRADE) WHITE BACKGROUND WITH BLACK OPAQUE LEGEND AND BORDER.
4. FINE NOTIFICATION SIGN SHALL HAVE A REFLECTORIZED (ENGINEERING GRADE) WHITE BACKGROUND WITH BLACK OPAQUE LEGEND AND BORDER.
5. ONE (1) SIGN REQUIRED FOR EACH PARKING SPACE.
6. INSTALLATION HEIGHT OF SIGN SHALL BE IN ACCORDANCE WITH SECTION 24-23 OF THE MANUAL ON UNIFORM TRAFFIC CONTROL DEVICES (MUTCD).

HANDICAP SIGN DETAIL
NTS

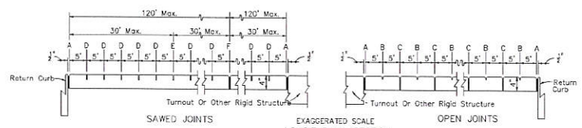

SIDEWALK JOINTS

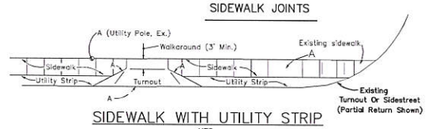

SIDEWALK WITH UTILITY STRIP
NTS

JOINT LEGEND

A– ½" EXPANSION JOINTS (PREFORMED JOINT FILLER)
B– ½" DUMMY JOINTS, TOOLED
C– ½" FORMED OPEN JOINTS
D– ⅛" SAW CUT JOINTS, ¼" DEEP (96 HOUR) MAX. 5' CENTERS
E– ⅛" SAW CUT JOINTS, ¼" DEEP (12 HOUR) MAX. 30' CENTERS
F– ½" EXPANSION JOINT WHEN RUN OF SIDEWALK EXCEEDS 120'
G– COLD JOINT WITH BOND BREAKER, TOOLED

FOOTNOTES:

ALL 1/2" JOINTS SHALL BE CONSTRUCTED WITH PREFORMED JOINT FILLER.

* 1/8" OPEN JOINTS PLACED AT EQUAL (20' MAX.) INTERVALS FOR DRIVEWAYS OVER 20' WIDE. JOINTS IN CURB AND GUTTER TO MATCH JOINTS IN DRIVEWAYS.

◊ DRIVEWAYS (6" CONCRETE) SHALL BE OF A UNIFORM WIDTH (W) AS SHOWN ON SHT. P-1.

GENERAL NOTES

SIDEWALKS SHALL BE CONSTRUCTED IN ACCORDANCE WITH FDOT STANDARD SPECIFICATION NO. 522 EXCEPT FOR CURB CUT RAMP RUNS WHICH SHALL BE FINISHED IN ACCORDANCE WITH INDEX NO. 304.

BOND BREAKER MATERIAL CAN BE ANY IMPERMEABLE COATED OR SHEET MEMBRANE OR PREFORMED MATERIAL HAVING A THICKNESS OF NOT LESS THAN 6 MILS NOR MORE THAN 1/2".

CONCRETE SIDEWALK DETAIL
NTS

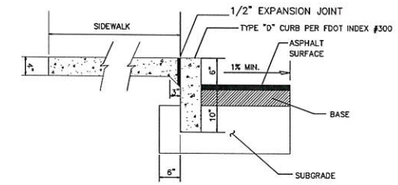

SIDEWALK INTEGRAL CURB DETAIL
NTS

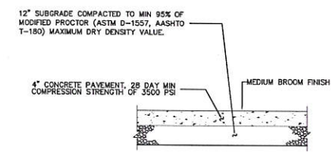

CONCRETE SIDEWALK DETAIL
NTS

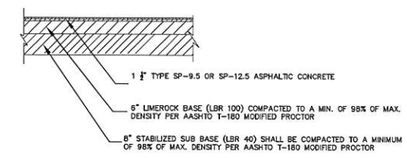

TYPICAL ASPHALT PAVEMENT SECTION
NTS

*PLEASE REFER TO THE ARDAMAN & ASSOCIATES, INC. GEOTECHNICAL REPORT DATED APRIL 11, 2007.

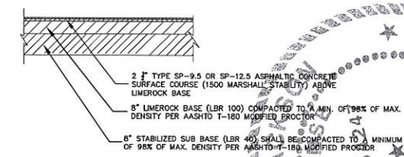

TYPICAL HEAVY DUTY ASPHALT PAVEMENT SECTION
NTS

*PLEASE REFER TO THE ARDAMAN & ASSOCIATES, INC. GEOTECHNICAL REPORT DATED APRIL 11, 2007.

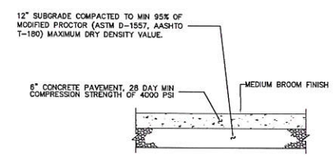

HEAVY DUTY CONCRETE PAVEMENT DETAIL
NTS

*PLEASE REFER TO THE ARDAMAN & ASSOCIATES, INC. GEOTECHNICAL REPORT DATED APRIL 11, 2007.

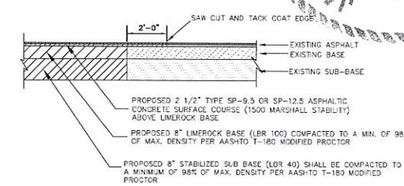

SAW CUT/REPLACEMENT ASPHALT PAVEMENT SECTION
NTS

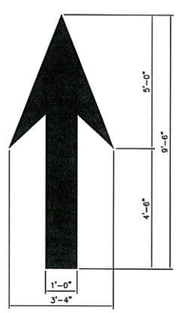

SOLID WHITE DIRECTIONAL PAVEMENT ARROW
NTS

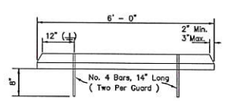

WHEEL STOP FRONT VIEW
NTS

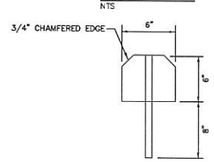

WHEEL STOP PROFILE (TYP.)
NTS

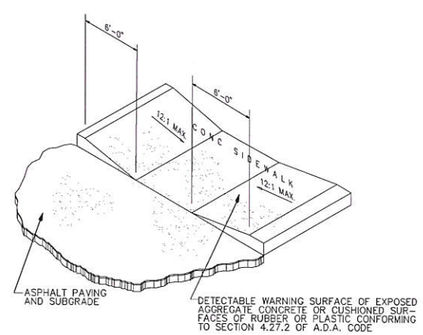

HANDICAP SIDEWALK RAMP
NTS

No.	REVISIONS	DATE	BY
1	REVISED PER CLIENT	01/26/15	RWS
2	REVISED PER COMMENTS	02/19/15	RWS

Kimley»Horn

© 2014 KIMLEY-HORN AND ASSOCIATES, INC.

3660 MAGUIRE BOULEVARD, SUITE 200, ORLANDO, FL 32803
PHONE: 407-898-1511 FAX: 407-896-2327
WWW.KIMLEY-HORN.COM CA 00000696

STATE OF FLORIDA LICENSED PROFESSIONAL ENGINEER JAY H. BRAUN No. 42595 PROFESSIONAL ENGINEER

FEB 24 2015

KHA PROJECT	049372005
DATE	08/08/2014
SCALE	AS SHOWN
DESIGNED BY	RWS
DRAWN BY	RWS
CHECKED BY	JRJ
DATE	FEB 2015

CONSTUCTION DETAILS

LADY LAKE CROSSING

TOWN OF LADY LAKE FLORIDA

SHEET NUMBER
C7.0

This document, together with the concepts and designs presented herein, as an instrument of service, is intended only for the specific purpose and client for which it was prepared. Reuse of and improper reliance on this document without written authorization and adaptation by Kimley-Horn and Associates, Inc. shall be without liability to Kimley-Horn and Associates, Inc.

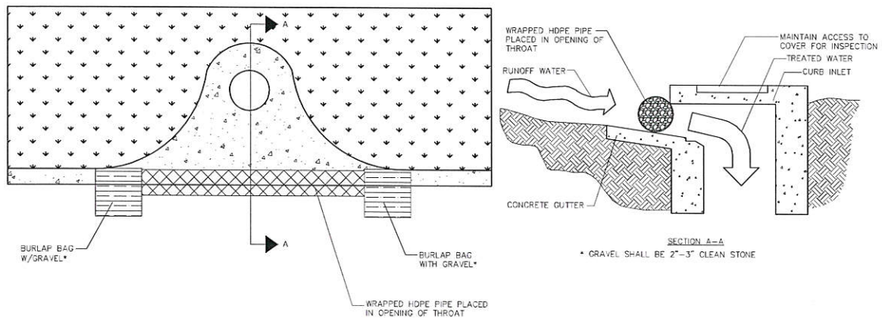

SOCK DRAIN INLET SEDIMENT FILTER

NTS

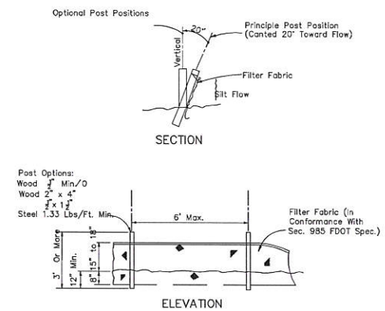

TYPE III SILT FENCE

NTS

CONTRACTOR TO PLACE FILTER FABRIC UNDER GRATE DURING CONSTRUCTION.

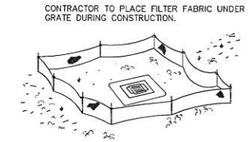

Type III Silt Fence Protection Around Ditch Bottom Inlets.

Do not deploy in a manner that silt fences will act as a dam across permanent flowing watercourses. Silt fences are to be used at upland locations and turbidity barriers used at permanent bodies of water.

SILT FENCE APPLICATIONS

NTS

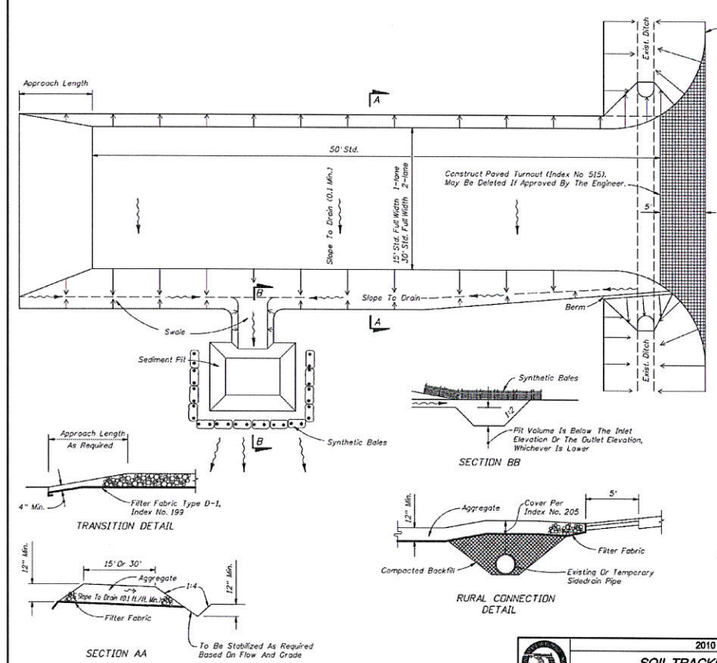

GENERAL NOTES

1. A Soil Tracking Prevention Device (STPD) shall be constructed at locations designated by the engineer for points of egress from unstabilized areas of the project to public roads where off-site tracking of mud could occur. Traffic from unstabilized areas of the construction project shall be directed thru a STPD. Barriers, flagging or other positive means shall be used as required to limit and direct vehicular egress across the STPD.
2. The Contractor may propose an alternative technique to minimize off-site tracking of sediment. The alternative must be reviewed and approved by the Engineer prior to its use.
3. All materials spilled, dropped, or tracked onto public roads (including the STPD aggregate and construction mud) shall be removed daily, or more frequently if so directed by the Engineer.
4. Aggregates shall be as described in Section 901 excluding 901-2.3. Aggregates shall be FDOT size #1. If this size is not available, the next available smaller size aggregate may be substituted with the approval of the Engineer. Sizes containing excessive small aggregate will track off the project and are unsuitable.
5. The sediment pit should provide a retention volume of 3600 cubic feet/acre of surface area draining to the pit. When the STPD is isolated from other drainage areas, the following pit volumes will satisfy this requirement:
   15' x 50'=100 ft.^{3} 30' x 50'=200 ft.^{3}
   As an option to the sediment pit, the width of the swale bottom can be increased to obtain the volume. When the sediment pit or swale volume has been reduced to one half, it shall be cleaned. When a swale is used, synthetic bales or silt fence shall be placed along the entire length.
6. The swale ditch draining the STPD shall have a 0.02% minimum and a 1.0% maximum grade along the STPD and to the sediment pit.
7. Mitered end sections are not required when the sidedrain pipe satisfies the clear zone requirements.
8. The STPD shall be maintained in a condition that will allow it to perform its function. To prevent off-site tracking, the STPD shall be rinsed (daily when in use) to move accumulated mud downward thru the stone. Additional stabilization of the vehicular route leading to the STPD may be required to limit the mud tracked.
9. A STPD shall be paid for under the contract unit price for Soil Tracking Prevention Device, EA. The unit price shall constitute full compensation for construction, maintenance, replacement of materials, removal, and restoration of the area utilized for the STPD; including but not limited to excavation, grading, temporary pipe (including MES when required), filter fabric, aggregate, paved turnout (including asphalt and base construction), ditch stabilization, approach route stabilization, sediment removal and disposal, water, rinsing and cleaning of the STPD and cleaning of public roads, grassing and sod. Synthetic Bale or Bale Type Barrier shall be paid for under the contract unit price for Synthetic Bales, LF. Silt fence shall be paid for under the contract unit price for Staked Silt Fence, LF.
10. The nominal size of a standard STPD is 15' x 50' unless otherwise shown in the plans. If the volume of entering and existing vehicles warrant, a 30' width STPD may be used if approved by the Engineer. When a double width (30') STPD is used, the pay quantity shall be 2 for each location.

2010 FDOT Design Standards

SOIL TRACKING PREVENTION DEVICE TYPE A

Last Revision	Sheet No.
07/01/07	1 of 1
Index No. 106	

No.	REVISIONS	DATE	BY
1	REVISED PER CLIENT	01/26/15	RWS
2	REVISED PER COMMENTS	02/19/15	RWS

Kimley»Horn
© 2014 KIMLEY-HORN AND ASSOCIATES, INC.
3660 MAGUIRE BOULEVARD, SUITE 200, ORLANDO, FL 32803
PHONE: 407-898-1511
WWW.KIMLEY-HORN.COM CA 00009696

JAY R. JACKSON LICENSE No. 54247 STATE OF FLORIDA PROFESSIONAL ENGINEER

Registered Professional Engineer: Jay R. Jackson, P.E.
Florida License Number: 54247
FEB 24 2015

KHA PROJECT 049372008
DATE 08/08/2014
SCALE AS SHOWN
DESIGNED BY RWS
DRAWN BY RWS
CHECKED BY JRJ
DATE

CONSTRUCTION DETAILS

LADY LAKE CROSSING

TOWN OF LADY LAKE FLORIDA

SHEET NUMBER
C7.1

This document, together with the concepts and designs presented herein, as an instrument of service, is intended only for the specific purpose and client for which it was prepared. Reuse of and improper reliance on this document without written authorization and adaptation by Kimley-Horn and Associates, Inc. shall be without liability to Kimley-Horn and Associates, Inc.

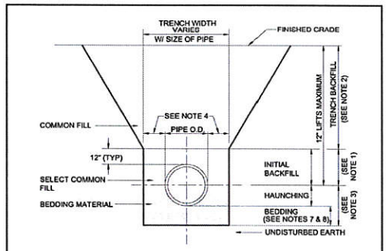

NOTES:
1. INITIAL BACKFILL: SELECT COMMON FILL COMPACTED TO 95% OF THE MAXIMUM DENSITY AS PER AASHTO T-180.
2. TRENCH BACKFILL: COMMON FILL COMPACTED TO 95% OF THE MAXIMUM DENSITY AS PER AASHTO T-180.
3. TYPE A BEDDING MATERIAL SHALL CONFORM TO FDOT NO. 57 AGGREGATE.
4. 15" MAX. (12" MIN.) FOR PIPE DIAMETER LESS THAN 24" AND 24" MAX (12" MIN) FOR PIPE DIAMETER 24" AND LARGER.
5. WATER SHALL NOT BE PERMITTED IN THE TRENCH DURING CONSTRUCTION.
6. ALL PIPE TO BE INSTALLED WITH BELL FACING UPSTREAM TO THE DIRECTION OF THE FLOW.
7. BEDDING DEPTH SHALL BE 4" MINIMUM FOR PIPE DIAMETER UP TO 12" AND 6" MINIMUM FOR PIPE DIAMETER 16" AND LARGER.
8. DEPTH FOR REMOVAL OF UNSUITABLE MATERIAL SHALL GOVERN DEPTH OF BEDDING ROCK BELOW THE PIPE. UTILITIES SHALL DETERMINE IN THE FIELD REQUIRED REMOVAL OF UNSUITABLE MATERIAL TO REACH SUITABLE FOUNDATION.
9. FINAL RESTORATION IN IMPROVED AREAS SHALL BE IN COMPLIANCE WITH ALL APPLICABLE REGULATIONS OF GOVERNING AGENCIES. SURFACE RESTORATION WITHIN TOWN OF LADY LAKE RIGHT-OF-WAY SHALL COMPLY WITH REQUIREMENTS OF RW UTILIZATION REGULATIONS AND ROAD CONSTRUCTION SPECIFICATIONS.

TOWN OF LADY LAKE
CONSTRUCTION STANDARD DETAILS
BEDDING AND TRENCHING - TYPE A
DATE FEB 2008 FIGURE E201

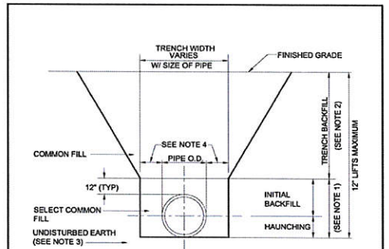

NOTES:
1. INITIAL BACKFILL AND HAUNCHING: SELECT COMMON FILL COMPACTED TO 95% OF THE MAXIMUM DENSITY AS PER AASHTO T-180.
2. TRENCH BACKFILL: COMMON FILL COMPACTED TO 95% OF THE MAXIMUM DENSITY AS PER AASHTO T-180.
3. PIPE BEDDING UTILIZING SELECT COMMON FILL OR BEDDING ROCK IN ACCORDANCE WITH TYPE A BEDDING AND TRENCHING DETAIL MAY BE REQUIRED AS DIRECTED BY UTILITIES.
4. 15" MAX. (12" MIN.) FOR PIPE DIAMETER LESS THAN 24" AND 24" MAX (12" MIN) FOR PIPE DIAMETER 24" AND LARGER.
5. WATER SHALL NOT BE PERMITTED IN THE TRENCH DURING CONSTRUCTION.
6. ALL PIPE TO BE INSTALLED WITH BELL FACING UPSTREAM TO THE DIRECTION OF THE FLOW.
7. FINAL RESTORATION IN IMPROVED AREAS SHALL BE IN COMPLIANCE WITH ALL APPLICABLE REGULATIONS OF GOVERNING AGENCIES. SURFACE RESTORATION WITHIN TOWN OF LADY LAKE RIGHT-OF-WAY SHALL COMPLY WITH REQUIREMENTS OF RIGHT-OF-WAY UTILIZATION REGULATIONS AND ROAD CONSTRUCTION SPECIFICATIONS.

TOWN OF LADY LAKE
CONSTRUCTION STANDARD DETAILS
BEDDING AND TRENCHING - TYPE B
DATE FEB 2008 FIGURE E202

MINIMUM LENGTH (FT) TO BE RESTRAINED ON EACH SIDE OF FITTING(S)										
TYPE	PIPE SIZE									
	4"	6"	8"	10"	12"	16"	20"	24"	30"	36"
90° BEND	20	29	37	44	51	65	77	89	105	120
45° BEND	8	12	15	18	21	27	32	37	44	50
22-1/2° BEND	4	6	7	9	10	13	15	18	21	24
11-1/4° BEND	2	3	4	5	6	7	8	9	10	12
PLUG OR BRANCH OF TEE	42	59	77	93	108	138	166	194	231	265
VALVE	21	30	39	47	54	69	83	97	116	133

NOTES:
1. FITTINGS SHALL BE RESTRAINED JOINTS UNLESS OTHERWISE INDICATED.
2. INSTALL FULL LENGTH JOINTS WITH TOTAL LENGTH EQUAL TO OR GREATER THAN SHOWN IN THE TABLE.
3. WHERE TWO OR MORE FITTINGS ARE TOGETHER, USE FITTING WHICH YIELDS GREATEST LENGTH OF RESTRAINED PIPE.
4. ALL LINE VALVES AND THROUGH RUN OF TEES SHALL BE RESTRAINED.
5. LENGTHS SHOWN IN THE TABLE HAVE BEEN CALCULATED IN ACCORDANCE WITH THE PROCEDURE OUTLINED IN "THRUST RESTRAINT DESIGN FOR DUCTILE IRON PIPE" AS PUBLISHED BY DIPRA, WITH THE FOLLOWING ASSUMPTIONS.
   WORKING PRESSURE: 150 PSI
   SOIL DESIGNATION: SM (SAND SILT)
6. FOR HDPE, PVC OR PIPE ENCASED IN POLYETHYLENE, INCREASE THE GIVEN VALUE BY A FACTOR OF 1.5.

TOWN OF LADY LAKE
CONSTRUCTION STANDARD DETAILS
RESTRAINED PIPE TABLE WATER AND RECLAIMED WATER MAINS
DATE FEB 2008 FIGURE E204-1

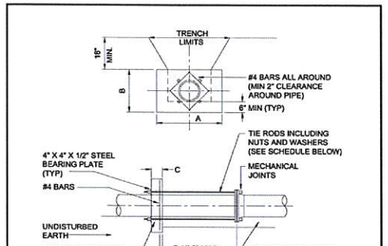

NOTES:
1. ADDITIONAL REINFORCEMENTS SHALL BE AS SPECIFIED BY THE ENGINEER.
2. MINIMUM COMPRESSIVE STRENGTH FOR CONCRETE SHALL BE 2500 PSI.
3. BEDDING, BACKFILL AND COMPACTION SHALL BE AS SPECIFIED ELSEWHERE IN THE STANDARD DRAWINGS.
4. ALL FORM BOARDS SHALL BE REMOVED PRIOR TO BACKFILL.
5. NO ALLOWANCE SHALL BE MADE FOR FRICTION BETWEEN THE PIPE WALL AND THE THRUST COLLAR.
6. DESIGN PRESSURE: 150 PSI.

SCHEDULE OF DIMENSIONS AND MATERIALS						
PIPE SIZE (INCHES)	DIMENSIONS (FT.)			TIE RODS REQ'D		
	A	B	C	D	DIA.	NO.
6	2.0	2.0	1.0		3/4	2
8	2.5	2.5	1.0		3/4	2
10	3.5	3.0	1.0		3/4	2
12	5.0	3.0	1.0		3/4	2
16	6.0	4.0	1.5		3/4	4
20	8.0	5.0	1.5		3/4	6
24	9.0	6.0	1.5		3/4	8

NOTE: THRUST COLLAR AREAS TO BE COMPUTED ON BASIS OF 2,000 LBS/SF SOIL RESTRAINT BEARING.

TOWN OF LADY LAKE
CONSTRUCTION STANDARD DETAILS
THRUST COLLAR (150 psi) WATER AND RECLAIMED WATER MAINS
DATE FEB 2008 FIGURE E205-1

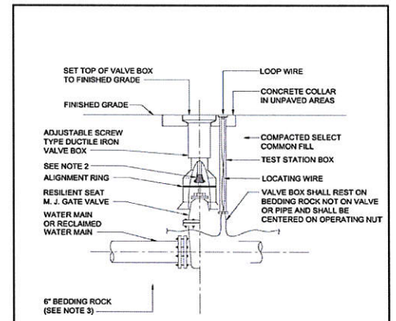

NOTES:
1. PVC PIPE OR DUCTILE IRON PIPE EXTENSIONS SHALL NOT BE USED ON VALVE BOX INSTALLATION.
2. THE VALVE ACTUATING NUT SHALL BE EXTENDED TO BE WITHIN 3' OF FINISHED GRADE.
3. BEDDING MATERIAL SHALL CONFORM TO FDOT NO. 57 AGGREGATE.
4. WIRE SHALL TERMINATE IN TEST STATION BOX.
5. REFER TO FIGURE A111 FOR INSTALLATIONS AT A DEPTH OF 6' OR GREATER.
6. VALVES SHALL BE AMERICAN AVK SERIES 25.

TOWN OF LADY LAKE
CONSTRUCTION STANDARD DETAILS
GATE VALVE AND BOX WATER AND RECLAIMED WATER MAINS
DATE FEB 2008 FIGURE E207

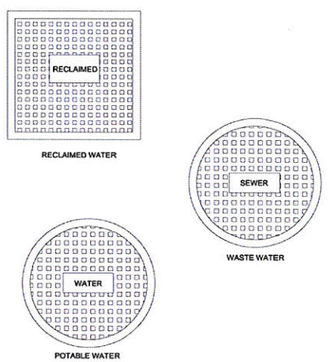

TOWN OF LADY LAKE
CONSTRUCTION STANDARD DETAILS
TYPICAL VALVE BOX COVER
DATE FEB 2008 FIGURE E210

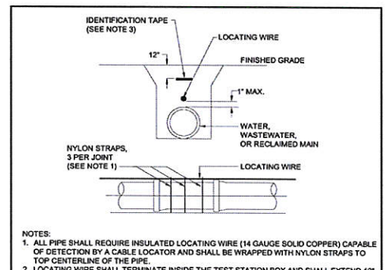

NOTES:
1. ALL PIPE SHALL REQUIRE INSULATED LOCATING WIRE (14 GAUGE SOLID COPPER) CAPABLE OF DETECTION BY A CABLE LOCATOR AND SHALL BE WRAPPED WITH NYLON STRAPS TO TOP CENTERLINE OF THE PIPE.
2. LOCATING WIRE SHALL TERMINATE INSIDE THE TEST STATION BOX AND SHALL EXTEND 12" ABOVE TOP OF COLLAR.
3. IDENTIFICATION TAPE SHALL BE MANUFACTURED OF POLYETHYLENE WITH A MINIMUM THICKNESS OF 4 MILS. TAPE WIDTH SHALL BE 3 INCHES AND SHALL HAVE BACKGROUND COLOR SPECIFIED BELOW, IMPRINTED WITH BLACK LETTERS. IMPRINT SHALL BE AS SPECIFIED BELOW AND SHALL REPEAT ITSELF A MINIMUM OF ONCE EVERY 2 FEET FOR ENTIRE LENGTH OF PIPE.
4. EARLY WARNING TAPE SHALL BE INSTALLED DIRECTLY ABOVE THE PIPE AT APPROXIMATELY 12-INCHES BELOW FINISHED GRADE AND SHALL HAVE THE FOLLOWING COLOR AND WARNING:

SERVICE TYPE	IMPRINT	BACKGROUND COLOR
WASTEWATER	"CAUTION-WASTEWATER LINE BURIED BELOW"	GREEN
POTABLE WATER	"CAUTION-POTABLE WATER LINE BURIED BELOW"	BLUE
RECLAIMED WATER	"CAUTION-RECLAIMED WATER LINE BURIED BELOW"	PURPLE

TOWN OF LADY LAKE
CONSTRUCTION STANDARD DETAILS
PIPE LOCATING WIRE
DATE FEB 2008 FIGURE E214

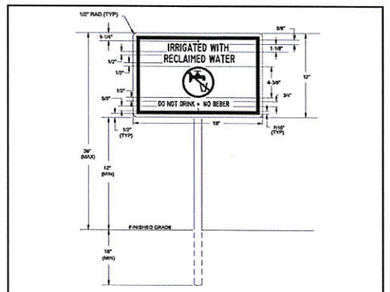

NOTES:
1. HEIGHT OF SIGN WILL DEPEND ON LOCATION AND SURROUNDING LANDSCAPE PLANT TYPES. IN ALL CASES, THE SIGN SHALL BE VISIBLE TO THE PUBLIC.
2. BACKGROUND SHALL BE WHITE, LETTERS SHALL BE BLACK (HELVETICA, SWISS 721 COREL OR ACCEPTABLE EQUAL) AND BORDER SHALL BE PANTONE PURPLE 522C.
3. ENGINEERING GRADE REFLECTIVE MATERIALS SHALL BE USED.
4. SIGN MATERIAL SHALL BE OF 0.040 GAUGE METAL.
5. POST SHALL BE 2-3/8" OD ALUMINUM PIPE, HOT DIP GALVANIZED PER ASTM A-123. POST TO BE PROVIDED BY CUSTOMER.
6. MOUNTING HARDWARE SHALL BE STAINLESS STEEL.
7. SIGNS SHALL BE PLACED BY THE CONTRACTOR IN ACCORDANCE WITH THE TOWN OF LADY LAKE APPROVED ENGINEERING PLANS AND/OR AS APPROVED BY THE UTILITIES.

TOWN OF LADY LAKE
CONSTRUCTION STANDARD DETAILS
RECLAIMED WATER SIGNAGE "DO NOT DRINK WATER"
DATE FEB 2008 FIGURE E301

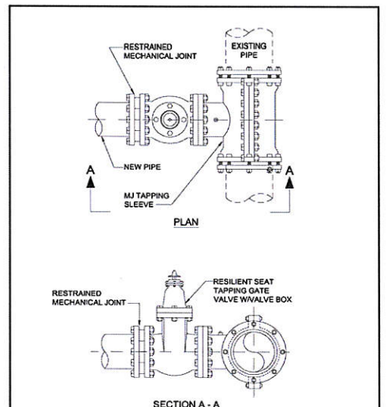

NOTE: VALVES SHALL BE MANUFACTURED BY AMERICAN AVK.

TOWN OF LADY LAKE
CONSTRUCTION STANDARD DETAILS
MJ TAPPING SLEEVE AND GATE VALVE ASSEMBLY FOR WATER AND RECLAIM WATER
DATE FEB 2008 FIGURE E121-1

GENERAL NOTES:
1. THE CONTRACTOR SHALL EXERCISE EXTREME CAUTION WHEN EXCAVATING IN PROXIMITY OF WATER MAINS, WASTEWATER FORCE MAINS, GRAVITY MAINS AND RECLAIMED WATER MAINS. MAIN LOCATIONS SHOWN ON PLANS ARE NOT EXACT OR GUARANTEED. CONTRACTOR IS RESPONSIBLE FOR FIELD VERIFYING EXISTING UTILITY LOCATIONS.
2. THE PUBLIC WORKS DEPARTMENT (352) 751-1526 SHALL BE NOTIFIED BY THE CONTRACTOR FOR PIPE EMERGENCIES.
3. ALL EXISTING WATER, FORCE, GRAVITY AND RECLAIMED WATER MAINS AND OTHER FACILITIES WITHIN THE LIMITS OF THE PROJECT SHALL BE SUPPORTED AND PROTECTED AGAINST DAMAGE DURING CONSTRUCTION.
4. CONTRACTOR SHALL ADJUST VALVE BOXES, AIR RELEASE VALVES, FIRE HYDRANTS, MANHOLE COVERS, ETC IN CONFLICT WITH ROADWAY.
5. THE CONTRACTOR, AT THE CONTRACTOR'S EXPENSE, SHALL IMMEDIATELY REPAIR ALL DAMAGES TO UTILITIES' MAINS AND FACILITIES. IF THE REPAIR IS NOT MADE IN A TIMELY MANNER, AS DETERMINED BY UTILITIES, UTILITIES MAY PERFORM REQUIRED REPAIRS AND CLEANUP. THE CONTRACTOR WILL BE CHARGED FOR ALL EXPENSES ASSOCIATED WITH THE REPAIR.
6. THE PUBLIC WORKS DEPARTMENT SHALL BE NOTIFIED AT LEAST SEVEN (7) DAYS PRIOR TO ANY CONSTRUCTION ACTIVITY WITHIN PROXIMITY OF ANY UTILITIES.
7. ONLY UTILITIES SHALL OPERATE WATER, WASTEWATER, AND RECLAIMED WATER VALVES. COORDINATE VALVE OPERATION WITH APPROPRIATE UTILITIES INSPECTOR.
8. THE CONTRACTOR SHALL COORDINATE ALL PUMP STATION OPERATION AND SHUT DOWN CONTROL WITH A PUBLIC WORKS PERSONNEL. THE CONTRACTOR SHALL PROVIDE FOR BYPASSING AND/OR HAULING OF WASTEWATER DURING THE INTERRUPTION OF FLOWS AND CONNECTIONS WITH EXISTING WASTEWATER SYSTEMS.
9. ALL NEW VALVES BEING INSTALLED SHALL REMAIN CLOSED DURING CONSTRUCTION. KEEP VALVES ON ALL WET TAPS CLOSED UNTIL CLEARED BY FDEP. DO NOT CONNECT ANY PROPOSED WATER MAIN TO ANY EXISTING WATER MAIN UNLESS CLEARED BY FDEP AND THE TOWN.
10. ALL EXISTING AND NEW TOWN OF LADY LAKE UTILITIES VALVES, VALVE BOXES, AND MANHOLES SHALL BE PROTECTED AND ADJUSTED TO FINISHED GRADE AS SHOWN ON THE DRAWINGS. ALL EXISTING ABOVE GROUND VALVES TO BE RELOCATED, AS REQUIRED.
11. MAKE TEMPORARY CONNECTIONS TO AN EXISTING POTABLE WATER SOURCE WITH TOWN APPROVED METER; FLUSH OUT NEW WATER MAIN WITH POTABLE WATER (USE "JUMPER" ASSEMBLY WITH REDUCED PRESSURE ASSEMBLY BACKFLOW PREVENTER TO MAKE TEMPORARY CONNECTIONS TO AN EXISTING WATER SOURCE).

TOWN OF LADY LAKE
CONSTRUCTION STANDARD DETAILS
GENERAL NOTES
DATE FEB 2008 FIGURE E102

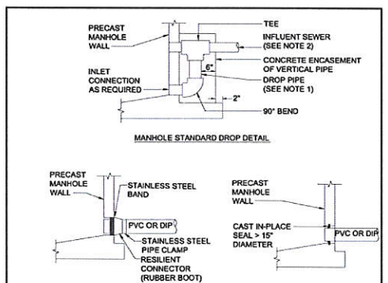

NOTES:
1. DROP PIPE AND FITTINGS SHALL BE OF EQUAL SIZE AND MATERIAL AS THE INFLUENT SEWER.
2. AN OUTSIDE DROP CONNECTION SHALL BE REQUIRED FOR ALL INFLUENT LINES WHICH HAVE AN INVERT 2' OR MORE ABOVE THE MANHOLE INVERT.
3. ALTERNATE WATER TIGHT CONNECTION DETAILS FOR CONNECTION OF 24" DIAMETER PIPES AND LARGER MUST BE APPROVED BY UTILITIES.
4. INSIDE SERVICE DROP CONNECTIONS ARE PERMITTED ON EXISTING MANHOLES.

TOWN OF LADY LAKE
CONSTRUCTION STANDARD DETAILS
STANDARD DRAWINGS MANHOLE CONNECTION
DATE FEB 2008 FIGURE E302

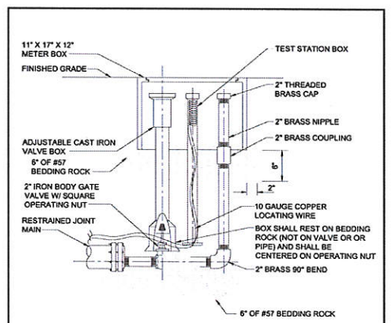

NOTES:
1. ALL 2" PIPE AND FITTINGS SHALL BE THREADED (NPT) BRASS JOINTS OR SCH 80 PVC WITH HYDRO GROUND FLUSHER.
2. 2" WILL BE DETERMINED AT PROJECT DESIGN & REVIEW BY PUBLIC WORKS DEPARTMENT.
3. TO BE DETERMINED BY PUBLIC WORKS DEPARTMENT AT TIME OF PRINT REVIEW.

TOWN OF LADY LAKE
CONSTRUCTION STANDARD DETAILS
STANDARD DRAWINGS BLOW OFF VALVE (STANDARD)
DATE FEB 2008 FIGURE E201-1

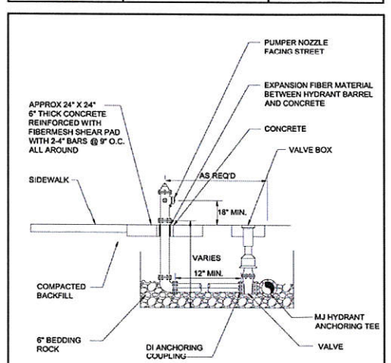

NOTES:
1. FIRE HYDRANT SHALL BE SUPPLIED WITHOUT A WEEP HOLE, OR WITH A PERMANENTLY PLUGGED WEEP HOLE.
2. ALL PIPE AND APPURTENANCES SHALL BE RESTRAINED.
3. ALL FIRE HYDRANT AND VALVES TO BE AUK, MUELER OR CLOW.

TOWN OF LADY LAKE
CONSTRUCTION STANDARD DETAILS
STANDARD DRAWINGS FIRE HYDRANT ASSEMBLY
DATE FEB 2008 FIGURE E203

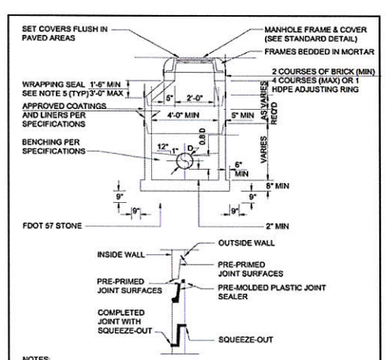

NOTES:
1. DROP CONNECTIONS ARE REQUIRED WHENEVER INVERT OF INFLUENT SEWER IS 24" OR MORE ABOVE THE INVERT OF THE MANHOLE. SEE MANHOLE CONNECTION DETAILS.
2. APPROVED CONCENTRIC CONE DESIGN MAY BE USED AS AN ALTERNATIVE.
3. A FLOW CHANNEL SHALL BE CONSTRUCTED INSIDE MANHOLE TO DIRECT INFLUENT INTO FLOW STREAM.
4. LIFT HOLES THROUGH STRUCTURE ARE NOT PERMITTED.
5. WRAP TIGHTLY AROUND CASTING JOINTS TO EFFECTIVELY SEAL THEM FROM GROUND WATER INFILTRATION.
6. HDPE ADJUSTING RINGS MAY BE SUBSTITUTED FOR BRICK RISERS.

TOWN OF LADY LAKE
CONSTRUCTION STANDARD DETAILS
STANDARD DRAWINGS PRECAST CONCRETE MANHOLE
DATE FEB 2008 FIGURE E301

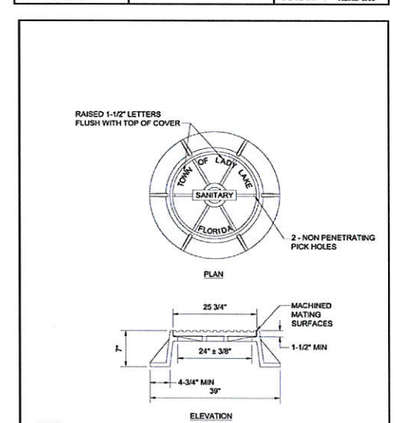

NOTES:
1. ONLY APPLIES TO UTILITIES OWNED AND MAINTAINED MANHOLES. "TOWN OF LADY LAKE" SHALL NOT APPEAR ON PRIVATE MANHOLES.

TOWN OF LADY LAKE
CONSTRUCTION STANDARD DETAILS
STANDARD DRAWINGS STANDARD MANHOLE FRAME AND COVER
DATE FEB 2008 FIGURE E304

No.	REVISIONS	DATE	BY
1	REVISED PER CLIENT	01/26/15	RWS
2	REVISED PER COMMENTS	02/19/15	RWS

Kimley»Horn
© 2014 KIMLEY-HORN AND ASSOCIATES, INC.
3660 MAGUIRE BOULEVARD, SUITE 200, ORLANDO, FL 32803
PHONE: 407-898-1511
WWW.KIMLEY-HORN.COM CA 00000696

LICENSED PROFESSIONAL
DATE:

KHA PROJECT 049372008
DATE 08/08/2014
SCALE AS SHOWN
DESIGNED BY RWS
DRAWN BY RWS
CHECKED BY JRJ

TOWN OF LADY LAKE UTILITY DETAILS

LADY LAKE CROSSING

TOWN OF LADY LAKE FLORIDA

SHEET NUMBER
C8.0

This document, together with the concepts and designs presented herein, as an instrument of service, is intended only for the specific purpose and client for which it was prepared. Reuse of and improper reliance on this document without written authorization and adaptation by Kimley-Horn and Associates, Inc. shall be without liability to Kimley-Horn and Associates, Inc.

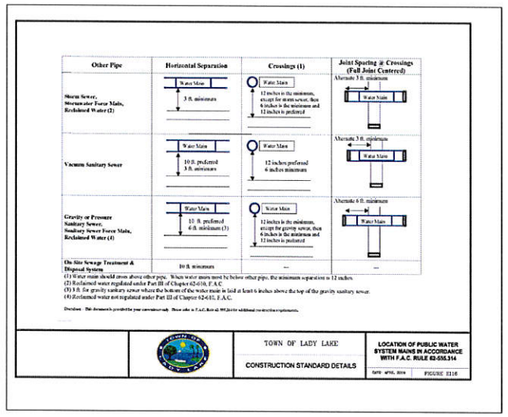

Other Pipe	Horizontal Separation	Crossings (1)	Joint Spacing & Crossings (Full Joint Centered)
Storm Sewer, Stormwater Force Main, Reclaimed Water (2)	Water Main 3 ft. minimum	Water Main 12 inches is the minimum, except for storm sewer, then 6 inches is the minimum and 12 inches is preferred	Alternate 3 ft. minimum Water Main
Vacuum Sanitary Sewer	Water Main 10 ft. preferred 3 ft. minimum	Water Main 12 inches preferred 6 inches minimum	Alternate 3 ft. equidistant Water Main
Gravity or Pressure Sanitary Sewer, Sanitary Sewer Force Main, Reclaimed Water (3)	Water Main 10 ft. preferred 6 ft. minimum (3)	Water Main 12 inches is the minimum, except for gravity sewer, then 6 inches is the minimum and 12 inches is preferred	Alternate 6 ft. minimum Water Main
On Site Sewage Treatment & Disposal System	10 ft. minimum	--	--

(1) Water main should cross above other pipe. When water mains must be below other pipe, the minimum separation is 12 inches.
(2) Reclaimed water regulated under Part III of Chapter 62-610, F.A.C.
(3) 3 ft. for gravity sanitary sewer where the bottom of the water main is laid at least 6 inches above the top of the gravity sanitary sewer.
(4) Reclaimed water not regulated under Part III of Chapter 62-610, F.A.C.

Disclaimer: This document is provided for your convenience only. Please refer to F.A.C. Rule 62-555 for additional restrictions/requirements.

TOWN OF LADY LAKE

CONSTRUCTION STANDARD DETAILS

LOCATION OF PUBLIC WATER SYSTEM MAINS IN ACCORDANCE WITH F.A.C. RULE 62-555.314

DATE: APRIL 2014 | FIGURE 3316

No.	REVISIONS	DATE	BY
1	REVISED PER CLIENT	01/26/15	RWS
2	REVISED PER COMMENTS	02/19/15	RWS

Kimley»Horn

© 2014 KIMLEY-HORN AND ASSOCIATES, INC.

3660 MAGUIRE BOULEVARD, SUITE 200, ORLANDO, FL 32803
PHONE: 407-898-1511
WWW.KIMLEY-HORN.COM CA 00000696

LICENSED PROFESSIONAL

KHA PROJECT 049372008

DATE 08/08/2014

SCALE AS SHOWN

DESIGNED BY RWS

DRAWN BY RWS

CHECKED BY JRJ DATE

TOWN OF LADY LAKE UTILITY DETAILS

LADY LAKE CROSSING

TOWN OF LADY LAKE FLORIDA

SHEET NUMBER

C8.1

This document, together with the concepts and designs presented herein, as an instrument of service, is intended only for the specific purpose and client for which it was prepared. Reuse of and improper reliance on this document without written authorization and adaptation by Kimley-Horn and Associates, Inc. shall be without liability to Kimley-Horn and Associates, Inc.

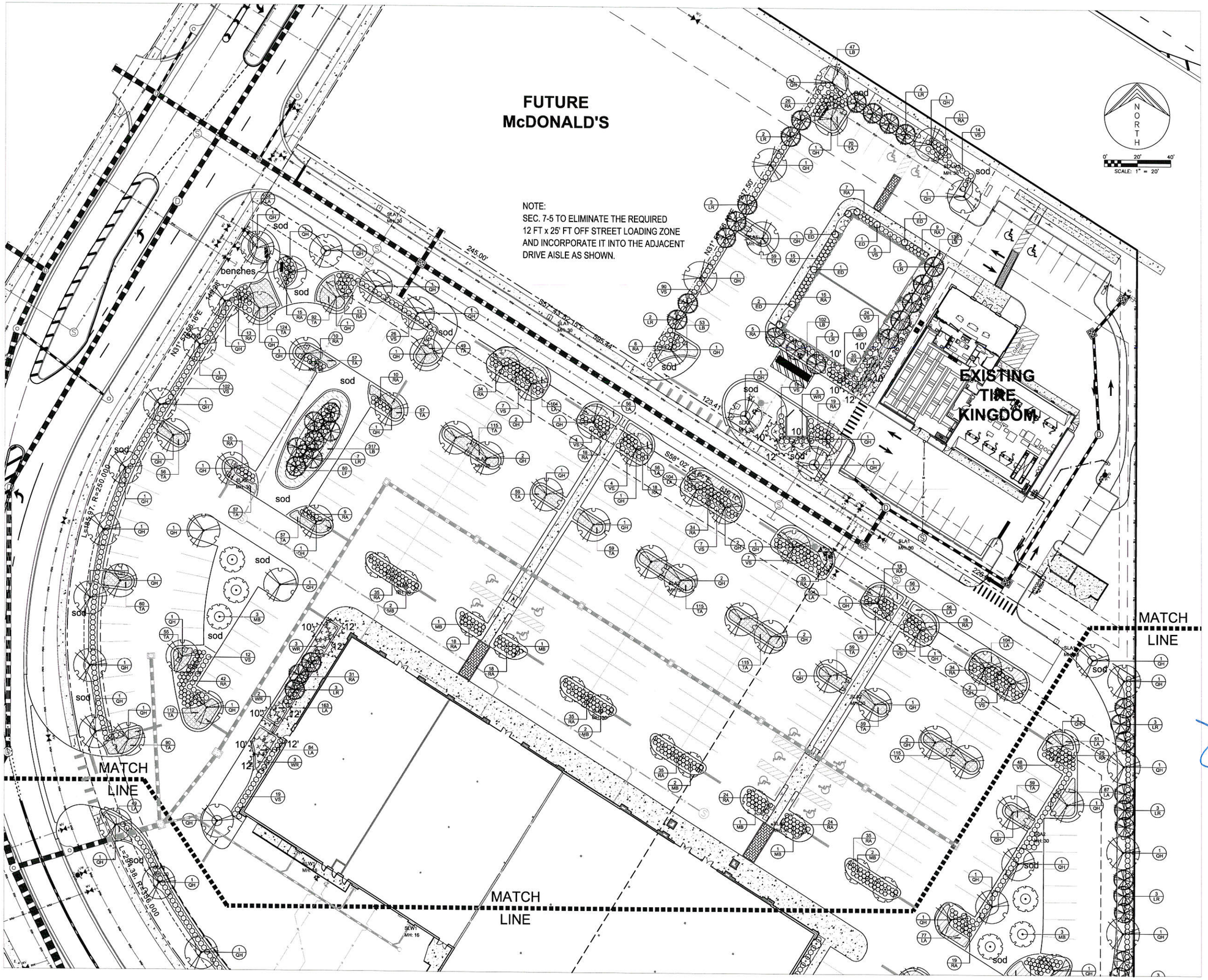

1925 Prospect Ave.
Orlando, FL 32814
P (407) 661-9100
F (407) 661-9101
www.c-p.com
Florida Corporate Certificate AAA C006526

Cuhaci & Peterson
Architects Engineers Planners
ORLANDO • PHILADELPHIA

CLIENT NAME
SRK Lady Lake 43 Associates, L.L.C.
4053 Maple Road
Amherst, NY 14226-1072

PROJECT NAME
Lady Lake Crossing East
@ SR 300 & US 27
Lady Lake, FL
Grey Shelll Building

SHEET TITLE
LANDSCAPE PLAN

James D Bor
2/24/15

RELEASE

PROJECT NO. 2130712
DATE 1/12/15
DRAWN JB
CHECKED JB

LS-1

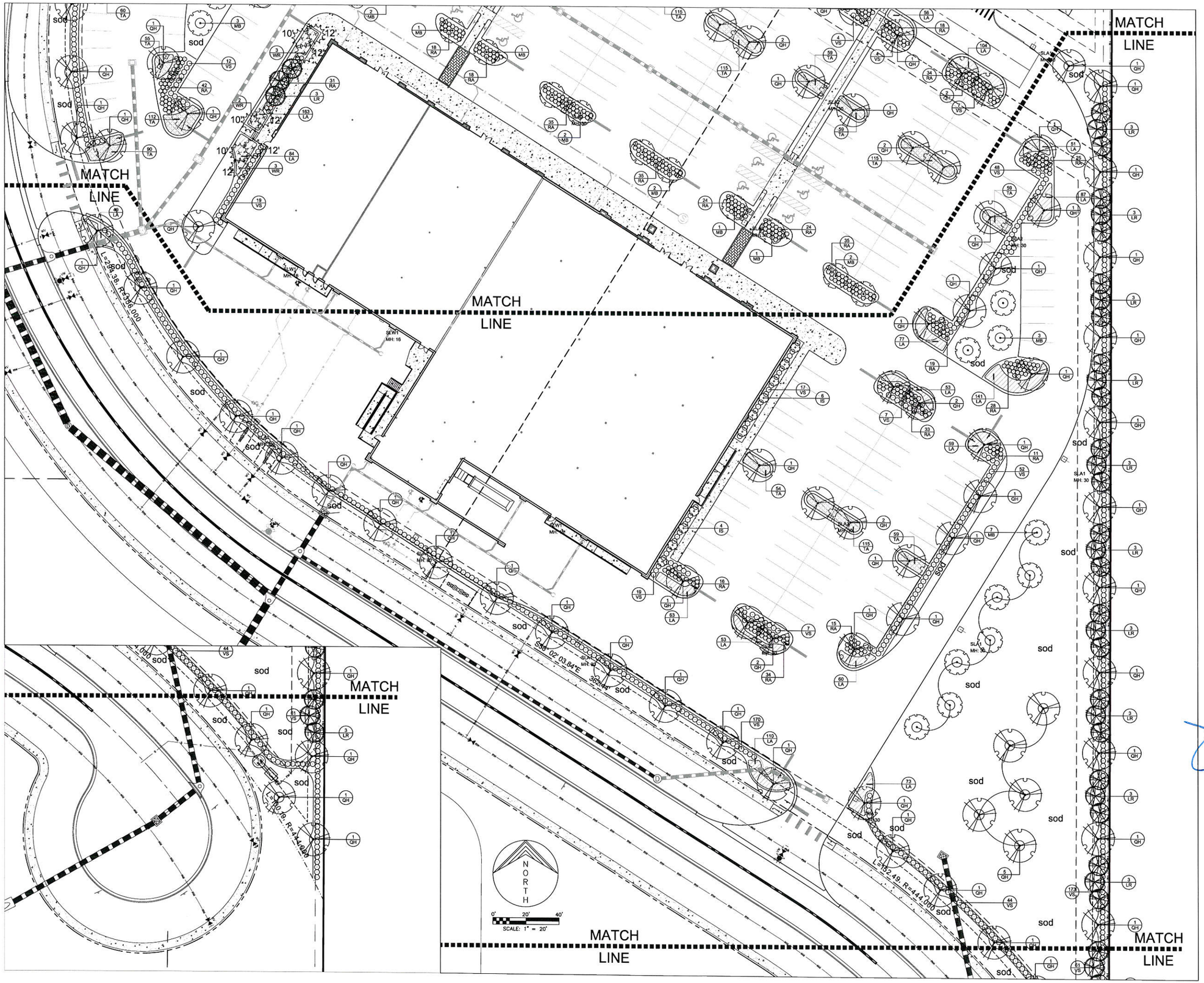

1925 Prospect Ave.
Orlando, FL 32814
P (407) 661-9100
F (407) 661-9101
www.cp.com
Florida Corporate Certificate #AA C000526

Cuhaci & Peterson
Architects Engineers Planners
ORLANDO • PHILADELPHIA

CLIENT NAME
SRK Lady Lake 43 Associates, L.L.C.
4053 Maple Road
Amherst, NY 14226-1072

PROJECT NAME
Lady Lake Crossing East
@ SR 500 & US 27
Lady Lake, FL
Grey Shell Building

SHEET TITLE
LANDSCAPE PLAN

James D Orr
2/24/15

RELEASE

PROJECT NO. 2130712
DATE 1/12/15
DRAWN JB
CHECKED JB

LS-2

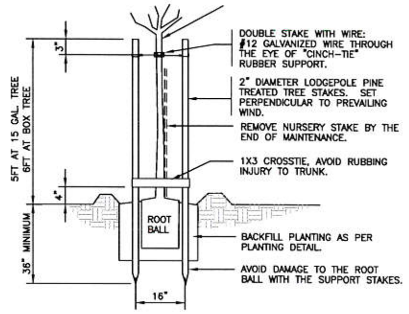

STAKING DETAIL

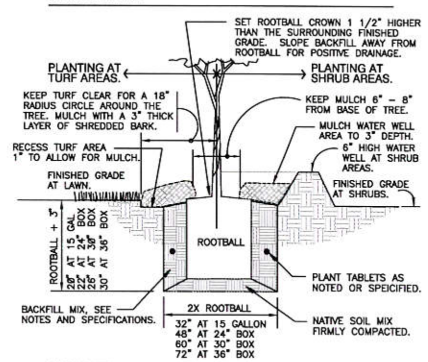

PLANT PIT DETAIL

2 TREE PLANTING DOUBLE STAKE

1" = 1'-0" 329343.19-03

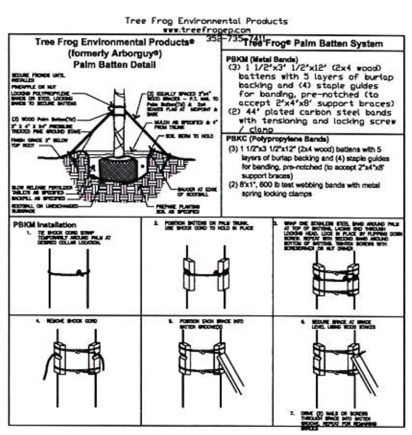

00 PALM BATTEN

N.T.S. 329343.02-01

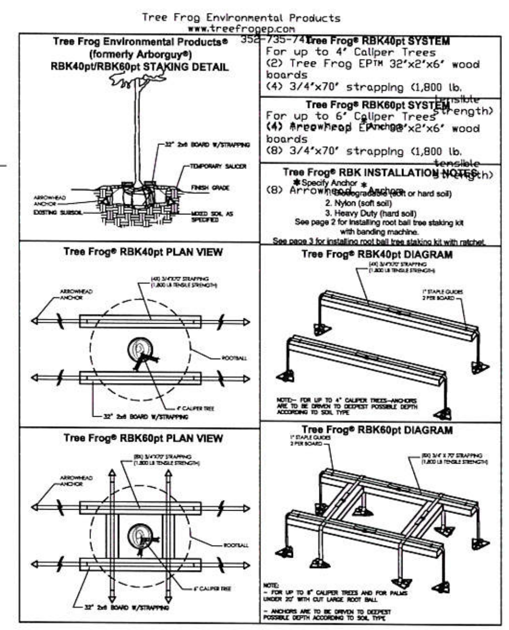

1 BELOW GROUND TREE STAKING KIT

NOT TO SCALE 329343.01-01

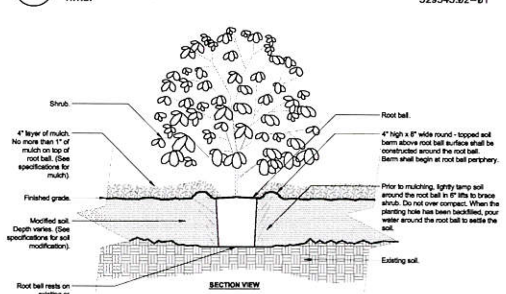

Notes:
1- Shrubs shall be of quality prescribed in the root observations detail and specifications.
2- See specifications for further requirements related to this detail.

P-X SHRUB - MODIFIED SOIL

3/4" = 1'-0"

URBAN TREE FOUNDATION © 2014 OPEN SOURCE FREE TO USE

FX-PL-FX-SHRB-03

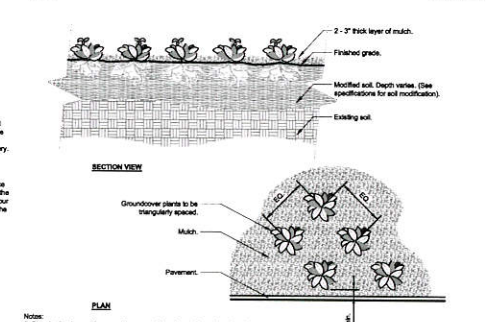

Notes:
1- See planting legend for groundcover species, size, and spacing dimension.
2- Small roots (½" or less) that grow around, up, or down the root ball periphery are considered a normal condition in container production and are acceptable however they should be eliminated at the time of planting. Roots on the periphery can be removed at the time of planting. (See root ball shaving container detail).
3- Settle soil around root ball of each groundcover prior to mulching.

P-X GROUNDCOVER

3/4" = 1'-0"

URBAN TREE FOUNDATION © 2014 OPEN SOURCE FREE TO USE

FX-PL-FX-GROU-01

PLANT SCHEDULE

TREES	CODE	BOTANICAL NAME / COMMON NAME	CONT	CAL	SIZE	QTY
	IS	ILEX X ATTENUATA 'SAVANNAH' / SAVANNAH HOLLY LOW - MEDIUM WATER ZONE	45 GAL	2.5"CAL	10'-12' HT, 4' SPR.	10
	LR	LAGERSTROEMIA X 'TUSCARORA' / RED CRAPE MYRTLE MULTI-TRUNK LOW - MEDIUM WATER ZONE	45 GAL	2.5"CAL	8' - 10' MULTI-TRUNK	62
	MB	MAGNOLIA GRANDIFLORA 'D.D. BLANCHARD' TM / SOUTHERN MAGNOLIA LOW - MEDIUM WATER ZONE	65 GAL	4"CAL	10'-12' HT. X 5'-6' SPR.	25
	QH	QUERCUS VIRGINIANA 'HIGH RISE' / HIGH RISE LIVE OAK LOW WATER ZONE	100 GAL	5"CAL	14'-16' HT., 7' SPR.	122
	WR	WASHINGTONIA ROBUSTA / MEXICAN FAN PALM LOW WATER ZONE	FIELD GROWN	SINGLE TRUNK	10' - 12' HT.	16

SHRUBS	CODE	BOTANICAL NAME / COMMON NAME	CONT	SIZE	SPACE	QTY
	ED	ELAEOCARPUS DECIPIENS TM / JAPANESE BLUEBERRY TREE	15 GAL	5' HT., FULL TO GROUND		8
	LF	LOROPETALUM CHINENSE RUBRUM 'RAZZLEBERRI' / RAZZLEBERRI FRINGE FLOWER	3 G	18"-24" SPR., FULL	36" OC.	60
	RA	RHAPHIOLEPIS INDICA 'ALBA' / WHITE INDIAN HAWTHORN	3 G	14"-16" SPR., FULL	30" OC.	915
	VS	VIBURNUM SUSPENSUM / SANDANKWA VIBURNUM	3 G	24"HT. 18" SPR. FULL	36" OC.	948

GROUND COVERS	CODE	BOTANICAL NAME / COMMON NAME	CONT	SPR.	SPACING	QTY
	LA	LIRIOPE MUSCARI 'AZTEC' / AZTEC LILY TURF	1 GAL	12" OA., FULL	18" o.c.	1,818
	LB	LIRIOPE MUSCARI 'BIG BLUE' / BIG BLUE LILYTURF	1 GAL	12" OA., FULL	18" o.c.	652
	TA	TRACHELOSPERMUM ASIATICUM 'ASIATIC' / ASIATIC JASMINE	1 GAL	12" OA., FULL	18" o.c.	1,978

LANDSCAPE PLAN REQUIREMENTS:

TREE REQUIREMENTS:

7.71 TOTAL ACRES
160.0" CALIPER PER ACRE REQUIRED
7.71 x 160.0 = 1233.6 CALIPER INCHES REQUIRED
974.5 CALIPER INCHES PROVIDED

OVERALL TREE COUNT/ CALIPER INCHES

122 OAKS @ 5" CALIPER EACH	610 CAL. INCHES
25 MAGNOLIAS @ 4" CALIPER EACH	100 CAL. INCHES
62 CRAPE MYRTLES @ 2.5" CALIPER EACH	155 CAL. INCHES
10 HOLLIES @ 2.5" CALIPER EACH	25 CAL. INCHES
16 PALMS @ 8" CALIPER EACH	128 CAL. INCHES
TOTAL CALIPER INCHES PROVIDED	1.018 CALIPER INCHES

BUFFER REQUIREMENTS:

ZONED PD - BUFFERYARD 'A' REQUIRED FOR R/W
MIN. 1 CANOPY TREE PER 50 LINEAR FEET
MIN. 10' WIDE BUFFER

NORTH RIGHT OF WAY
619.10 LF/ 50 = 12.38
12 TREES REQUIRED
15 TREES PROVIDED

SOUTH RIGHT OF WAY
615.12 LF/ 50 = 12.3
12 TREES REQUIRED
15 TREES PROVIDED

EAST PROPERTY LINE
638 LF/ 50 = 12.76
13 TREES REQUIRED
14 TREES PROVIDED

WEST RIGHT OF WAY
629.63 LF/ 50 = 12.59
13 TREES REQUIRED
14 TREES PROVIDED

VEHICULAR USE AREAS
MIN. 10% OF GROSS SF PARKING AREA
172,500 SF x 10% = 17,250 SF REQUIRED
22,800 SF PROVIDES WITHIN PARKING FIELD

PARKING LOT TO BE SCREENED ON EAST SIDE BY 1 CANOPY TREE AND 3 UNDERSTORY TREES PER 50 LINEAR FEET.

OUTPARCEL REQUIREMENTS

OUTPARCEL NORTH RIGHT OF WAY (US 441)
117.78 LF/ 50 = 2.35
2 TREES REQUIRED
2 TREES PROVIDED

OUTPARCEL SOUTH RIGHT OF WAY
123.41 LF/ 50 = 2.46
2 TREES REQUIRED
2 TREES PROVIDED

GENERAL LANDSCAPE NOTES

1. ALL PLANTS TO BE FLORIDA NO. 1, OR BETTER AS OUTLINED UNDER 'GRADES AND STANDARDS FOR NURSERY PLANTS, PART I, 1963 AND PART II, STATE OF FLORIDA DEPARTMENT OF AGRICULTURE, TALLAHASSEE, FLORIDA, AND ANY AMENDMENTS THERETO.
2. ALL TREES AND PLANT MATERIAL SHALL BE PLANTED IN ACCORDANCE WITH THE SPECIFICATIONS DESCRIBED IN THE STATE DEPARTMENT OF AGRICULTURE AND CONSUMER SERVICES, DIVISION OF FORESTRY, "TREE PROTECTION MANUAL FOR BUILDERS AND DEVELOPERS", OCTOBER, 1980.
3. THE LANDSCAPE CONTRACTOR (CONTRACTED BY OWNER, N.I.C.) SHALL BE RESPONSIBLE FOR ALL MATERIALS AND ALL WORK AS CALLED FOR ON THE LANDSCAPE PLANS. THE LIST OF PLANT QUANTITIES ACCOMPANYING THE PLANS SHALL BE USED AS A GUIDE ONLY. IF A VARIATION OCCURS BETWEEN THE PLANS AND THE PLANT LIST, THE PLANS SHALL CONTROL.
4. ALL TREES, SHRUBS AND GROUND COVERS SHALL BE PLANTED USING A SOIL MIXTURE PREPARED ACCORDINGLY (2/3 EXISTING SOIL, 1/3 PEAT).
5. THE LANDSCAPE CONTRACTOR SHALL INSURE ADEQUATE VERTICAL DRAINAGE IN ALL PLANT BEDS AND PLANTERS. VERTICAL DRILLING THROUGH ANY COMPACTED FILL TO NATIVE SOIL SHALL BE ACCOMPLISHED TO AID DRAINAGE.
6. ALL PLANT BEDS AND TREE WATERING BASINS SHALL BE TOP DRESSED WITH TWO AND ONE-HALF INCHES (2 1/2") OF EUCALYPTUS MULCH, PINE STRAW, OR PINE BARK NUGGET MULCH.
7. NO TREES SHALL BE PLANTED CLOSER THAN 3 FEET (3') FROM THE EDGE OF PAVEMENT TO ALLOW ADEQUATE TREE TRUNK PROTECTION .
8. LANDSCAPE CONTRACTOR SHALL BE WHOLLY RESPONSIBLE FOR STABILITY AND PLUMB CONDITION OF ALL TREES AND SHALL BE LEGALLY LIABLE FOR ANY DAMAGE CAUSED BY THE INSTABILITY OF ANY PLANT MATERIAL. STAKING OF PALMS, IF DESIRED, SHALL BE DONE UTILIZING A METHOD AGREED UPON BY THE LANDSCAPE ARCHITECT. PALM TRUNKS TO BE STRAIGHT, AND THE CALIPER OF PALMS MUST BE THE SAME THE ENTIRE LENGTH OF TRUNK INCLUDING THE TOP OF THE TRUNK WHERE THE FRONDS BEGIN. PALM TRUNKS SHALL BE A 12" MINIMUM CALIPER FOR PROPOSED PALMS. PALMS SHALL BE PLANTED WITH THE BUD PERPENDICULAR TO THE GROUND PLANE.
9. ALL LAWN AREAS TO RECEIVE SOD SHALL BE DISKED FOUR(4) TO SIX(6) INCHES AND DRAGGED TO ESTABLISH A LEVEL FINISH GRADE. ALL DEBRIS TO BE REMOVED FROM THE SITE.
10. SOD SHALL BE FREE OF WEEDS AND PESTS. IT SHALL BE LAID EVENLY AND ROLLED, WITH TIGHT FITTING JOINTS. THE SOD SHALL CONTAIN MOIST SOIL WHICH DOES NOT FALL APART OR TEAR WHEN LIFTED. ALL AREAS NOT PAVED OR OTHERWISE LANDSCAPED SHALL BE SODDED. SOD SHALL BE ARGENTINE BAHIA UNLESS OTHERWISE SPECIFIED BY THE DEVELOPER.
11. ALL LANDSCAPE AREAS TO BE IRRIGATED WITH AN AUTOMATIC UNDERGROUND SYSTEM, DIRECT SPRAY HEADS AWAY FROM NATURAL AREAS AND PAVED SURFACES. ALL VALVES SHALL BE PLACED IN VALVE BOXES SIZED FOR EASE OF MAINTENANCE. ALL PIPING AND WIRES UNDER ROADWAYS TO BE IN PVC SCHEDULE 40 SLEEVING. ALL IMPACT TYPE SPRINKLER HEADS, WHEN ON RISERS, SHALL BE SUPPORTED BY A METAL STAKE WITH STAINLESS STEEL CLAMPS (STAKE AND PIPE TO BE PAINTED BLACK). BACKFLOW PREVENTORS SHALL BE SPECIFIED IN ACCORDANCE WITH STATE AND LOCAL REGULATIONS. ALL MAINLINE PIPING AND LATERAL PIPES TO CONFORM TO THE ASTM STANDARDS FOR PVC PIPING AND FITTINGS AND TO BE INSTALLED IN ACCORDANCE WITH SOUND INDUSTRY STANDARDS.
12. THE PLANS WILL REQUIRE THE LANDSCAPE CONTRACTOR TO PREPARE AND SUBMIT IRRIGATION SHOP DRAWINGS, THE LANDSCAPE ARCHITECT WILL REVIEW THE SHOP DRAWINGS ON BEHALF OF THE OWNER.
13. EVERY POSSIBLE SAFEGUARD SHALL BE TAKEN TO PROTECT BUILDING SURFACES, EQUIPMENT, AND FURNISHINGS. LANDSCAPE CONTRACTOR SHALL BE RESPONSIBLE FOR ANY DAMAGE OR INJURY TO PERSON OR PROPERTY WHICH MAY OCCUR AS A RESULT OF NEGLIGENCE IN THE PERFORMANCE OF THE WORK.
14. THE LANDSCAPE CONTRACTOR SHALL INSTALL ALL PLANT MATERIALS IN ACCORDANCE WITH THE SPECIFICATIONS. IN ALL CASES THE SPECIFIED SIZE OF THE PLANT MATERIAL SHALL HAVE PRECEDENCE OVER THE CONTAINER SIZE. THE LANDSCAPE CONTRACTOR SHALL NOTIFY THE LANDSCAPE ARCHITECT WITH ANY DISCREPANCIES IN LOCATING THE PLANT MATERIAL AS SPECIFIED.
15. ALL LANDSCAPING SHALL MEET OR EXCEED THE REQUIREMENTS SET FORTH BY THE TOWN OF LADY LAKE FLORIDA.

1925 Prospect Ave.
Orlando, FL 32814
P (407) 661-9100
F (407) 661-9101
www.c-p.com
Florida Corporate Certificate #AA C000526

Cuhaci & Peterson
Architects Engineers Planners
ORLANDO • PHILADELPHIA

CLIENT NAME
SRK Lady Lake 43 Associates, L.L.C.
4053 Maple Road
Amherst, NY 14226-1072

PROJECT NAME
Lady Lake Crossing East
@ SR 500 & US 27
Lady Lake, FL
Grey Shell Building

SHEET TITLE
LANDSCAPE DETAILS & NOTES

James P [signature] 2/4/15

RELEASE

PROJECT NO. 2130712
DATE 1/12/15
DRAWN JB
CHECKED JB

LS-3

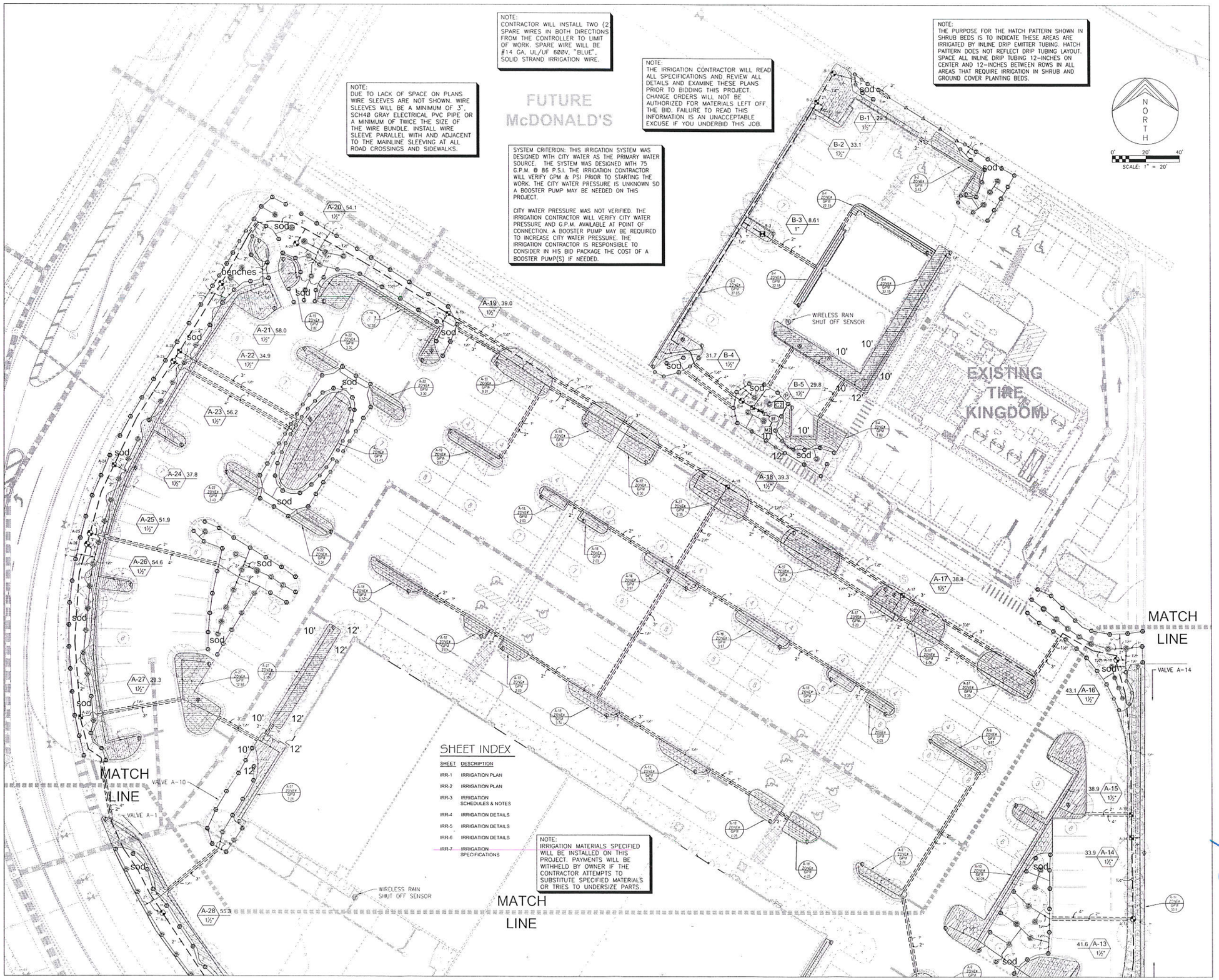

1925 Prospect Ave.
Orlando, FL 32814
P (407) 661-9100
F (407) 661-9101
www.cp.com
Cuhaci & Peterson
Architects Engineers Planners
ORLANDO • PHILADELPHIA

CLIENT NAME
SRK Lady Lake 43 Associates, L.L.C.
4053 Maple Road
Amherst, NY 14226-1072

PROJECT NAME
Lady Lake Crossing East
@ SR 500 & US 27
Lady Lake, FL
Grey Shell Building

SHEET TITLE
IRRIGATION PLAN

SPRINKLER CONSULTANT
WILLIAM B. CURTIS
Phone: (407) 830-7041
sprinkler-consultant@earthlink.net

RELEASE

PROJECT NO 2130712
DATE 1.12.15
DRAWN
CHECKED

IRR-1

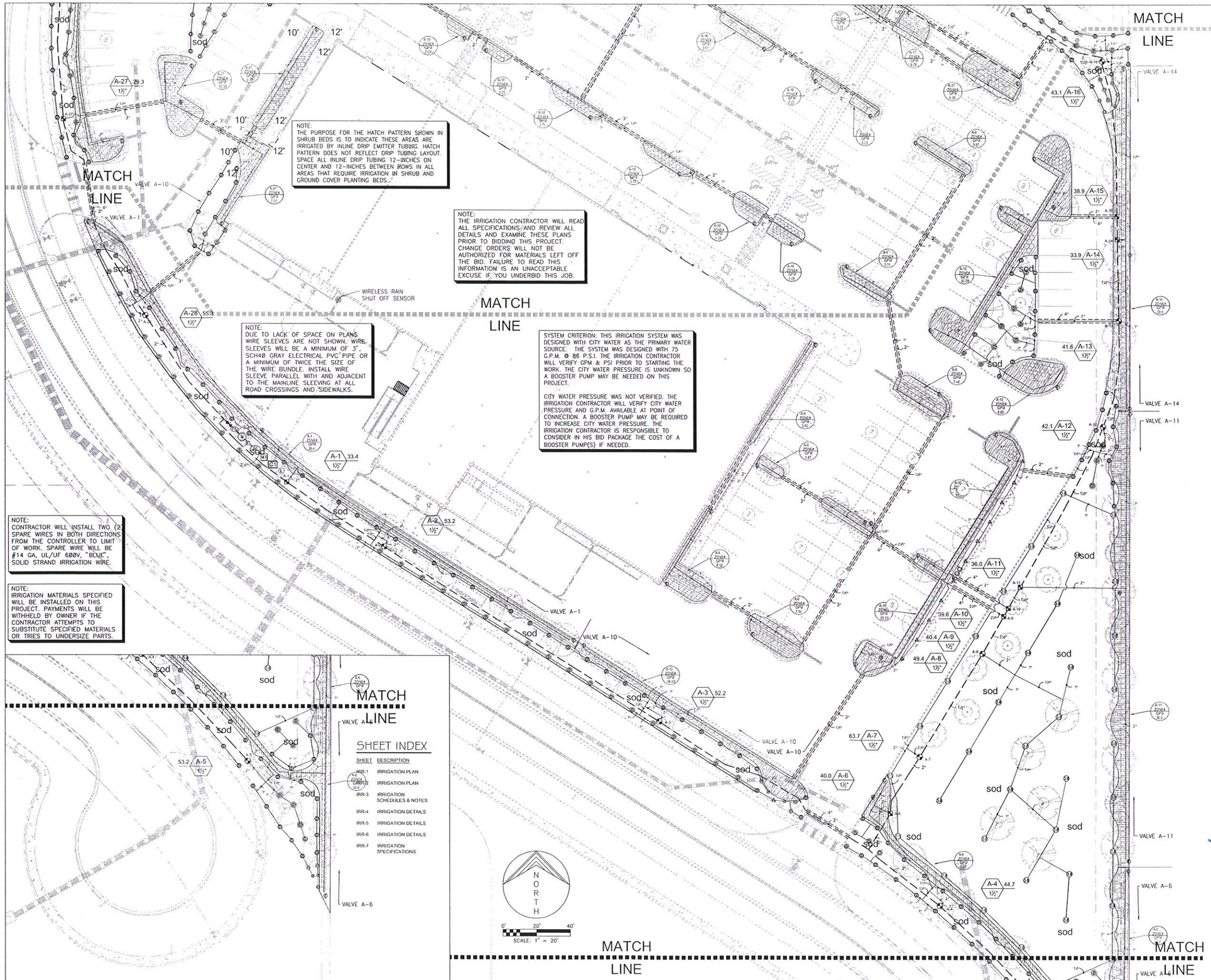

NOTE:
THE PURPOSE FOR THE HATCH PATTERN SHOWN IN SHRUB BEDS IS TO INDICATE THESE AREAS ARE IRRIGATED BY INLINE DRIP EMITTER TUBING. HATCH PATTERN DOES NOT REFLECT DRIP TUBING LAYOUT. SPACE ALL INLINE DRIP TUBING 12-INCHES ON CENTER AND 12-INCHES BETWEEN ROWS IN ALL AREAS THAT REQUIRE IRRIGATION IN SHRUB AND GROUND COVER PLANTING BEDS.

NOTE:
THE IRRIGATION CONTRACTOR WILL READ ALL SPECIFICATIONS AND REVIEW ALL DETAILS AND EXAMINE THESE PLANS PRIOR TO BIDDING THIS PROJECT. CHANGE ORDERS WILL NOT BE AUTHORIZED FOR MATERIALS LEFT OFF THE BID. FAILURE TO READ THIS INFORMATION IS AN UNACCEPTABLE EXCUSE IF YOU UNDERBID THIS JOB.

NOTE:
DUE TO LACK OF SPACE ON PLANS WIRE SLEEVES ARE NOT SHOWN. WIRE SLEEVES WILL BE A MINIMUM OF 3", SCH40 GRAY ELECTRICAL PVC PIPE OR A MINIMUM OF TWICE THE SIZE OF THE WIRE BUNDLE. INSTALL WIRE SLEEVE PARALLEL WITH AND ADJACENT TO THE MAINLINE SLEEVING AT ALL ROAD CROSSINGS AND SIDEWALKS.

SYSTEM CRITERION: THIS IRRIGATION SYSTEM WAS DESIGNED WITH CITY WATER AS THE PRIMARY WATER SOURCE. THE SYSTEM WAS DESIGNED WITH 75 G.P.M. @ 86 P.S.I. THE IRRIGATION CONTRACTOR WILL VERIFY GPM & PSI PRIOR TO STARTING THE WORK. THE CITY WATER PRESSURE IS UNKNOWN SO A BOOSTER PUMP MAY BE NEEDED ON THIS PROJECT.

CITY WATER PRESSURE WAS NOT VERIFIED. THE IRRIGATION CONTRACTOR WILL VERIFY CITY WATER PRESSURE AND G.P.M. AVAILABLE AT POINT OF CONNECTION. A BOOSTER PUMP MAY BE REQUIRED TO INCREASE CITY WATER PRESSURE. THE IRRIGATION CONTRACTOR IS RESPONSIBLE TO CONSIDER IN HIS BID PACKAGE THE COST OF A BOOSTER PUMP(S) IF NEEDED.

NOTE:
CONTRACTOR WILL INSTALL TWO (2) SPARE WIRES IN BOTH DIRECTIONS FROM THE CONTROLLER TO LIMIT OF WORK. SPARE WIRE WILL BE #14 GA, UL/UF 600V, "BLUE", SOLID STRAND IRRIGATION WIRE.

NOTE:
IRRIGATION MATERIALS SPECIFIED WILL BE INSTALLED ON THIS PROJECT. PAYMENTS WILL BE WITHHELD BY OWNER IF THE CONTRACTOR ATTEMPTS TO SUBSTITUTE SPECIFIED MATERIALS OR TRIES TO UNDERSIZE PARTS.

SHEET INDEX

SHEET	DESCRIPTION
IRR-1	IRRIGATION PLAN
IRR-2	IRRIGATION PLAN
IRR-3	IRRIGATION SCHEDULES & NOTES
IRR-4	IRRIGATION DETAILS
IRR-5	IRRIGATION DETAILS
IRR-6	IRRIGATION DETAILS
IRR-7	IRRIGATION SPECIFICATIONS

1925 Prospect Ave.
Orlando, FL 32814
P (407) 661-9100
F (407) 661-9101
www.c-p.com

Cuhaci & Peterson
Architects Engineers Planners
ORLANDO • PHILADELPHIA

CLIENT NAME
SRK Lady Lake 43 Associates, L.L.C.
4053 Maple Road
Amherst, NY 14226-1072

PROJECT NAME
Lady Lake Crossing East
@ SR 500 & US 27
Lady Lake, FL
Grey Shell Building

SHEET TITLE
IRRIGATION PLAN

SPRINKLER CONSULTANT
WILLIAM B. CURTIS
Phone: (407) 830-7041
sprinkler-consultant@earthlink.net

RELEASE

PROJECT NO. 2130712
DATE 1/12/15
DRAWN
CHECKED

IRR-2

IRRIGATION SCHEDULE

SYMBOL	MANUFACTURER/MODEL/DESCRIPTION
EST CST SST	HIT 906-CKV-PRD 15 Strip Series Turf Spray, 6" (15.24cm) Male Pop-Up Sprayhead with Check Valve, Pressure Regulating Device, and Co-Molded Wiper Seal. 9.5" (24.13cm) body.
Q T H F	HIT 906-CKV-PRD 8 Series Turf Spray, 6" (15.24cm) Male Pop-Up Sprayhead with Check Valve, Pressure Regulating Device, and Co-Molded Wiper Seal. 9.5" (24.13cm) body.
Q T H F	HIT 906-CKV-PRD 10 Series Turf Spray, 6" (15.24cm) Male Pop-Up Sprayhead with Check Valve, Pressure Regulating Device, and Co-Molded Wiper Seal. 9.5" (24.13cm) body.
Q T H TT TQ F	HIT 906-CKV-PRD 12 Series Turf Spray, 6" (15.24cm) Male Pop-Up Sprayhead with Check Valve, Pressure Regulating Device, and Co-Molded Wiper Seal. 9.5" (24.13cm) body.
Q T H TT TQ F	HIT 906-CKV-PRD 15 Series Turf Spray, 6" (15.24cm) Male Pop-Up Sprayhead with Check Valve, Pressure Regulating Device, and Co-Molded Wiper Seal. 9.5" (24.13cm) body.
	HIT 906-CKV-PRD ADJ Turf Spray, 6" (15.24cm) Male Pop-Up Sprayhead with Check Valve, Pressure Regulating Device, and Co-Molded Wiper Seal. 9.5" (24.13cm) body.

SYMBOL	MANUFACTURER/MODEL/DESCRIPTION
2.5	Rain Bird 5006-PL-PC, FC-R Turf Rotor, 6.0" Pop-Up with Plastic Riser. Adjustable and Full Circle. Standard Angle Nozzle, In-Stem Pressure Regulator, and Flow Shut-Off Device.
3.0	Rain Bird 5006-PL-PC, FC-R Turf Rotor, 6.0" Pop-Up with Plastic Riser. Adjustable and Full Circle. Standard Angle Nozzle, In-Stem Pressure Regulator, and Flow Shut-Off Device.

SYMBOL	MANUFACTURER/MODEL/DESCRIPTION
	Rain Bird XCZ-150-PRB-COM High Flow Control Zone Kit, for Large Commercial Drip Zones. 1-1/2" PESB Valve with two 1" Pressure Regulating (40psi) Quick-Check Basket Filters. Flow range: 15-40gpm.
	Antelco Green Back Flush Valve MOUNT INSIDE 6" ECONO VALVE BOX, SEE DETAILS
	Rain Bird ARV050 1/2" Air Relief Valve, made of quality rust-proof materials, with a 6.0" drip valve box (SEB 7XB emitter box). Use with installation below soil. The valve will allow air to escape the pipeline, thus preventing water hammer or blockage.
	Area to Receive Dripline Rain Bird XFCV-09-12 (12) XFCV On-Surface Landscape Dripline with a Heavy-Duty 3.5 psi Check Valve. 0.9GPH emitters at 12.0" O.C. Dripline laterals spaced at 12.0" apart, with emitters offset for triangular pattern. Great for elevation change.

SYMBOL	MANUFACTURER/MODEL/DESCRIPTION
	HIT 515-050 Inlet size 1-1/2" electric remote control valve, female thread inlet and outlet with flow control
	Nibco T-113 Class 125 bronze gate shut off valve with wheel handle, same size as mainline pipe diameter at valve location. Size Range - 1/4" - 3"
M	HIT 515-050 (2) 1-1/2" (MASTER VALVE) Inlet size 1-1/2" electric remote control valve, female thread inlet and outlet with flow control
BF	Febco 825Y 1" Reduced Pressure Backflow Preventer
BF	Febco 825Y 1-1/2" Reduced Pressure Backflow Preventer
C2	Rain Bird ESP8LXME-LXMM 8 Station Capable Commercial Controller. Mounted on a Powder-Coated Metal Cabinet.
C1	Rain Bird ESP8LXMEF-LXMMPED with (06) ESPLXMSM4 (2) 32 Station Capable Commercial Controller. Mounted on a Powder-Coated Metal Pedestal. Flow Sensing and Water Management Capabilities.
R	Rain Bird WR2-RC Wireless Rain Sensor Combo, includes 1 receiver and 1 rain sensor transmitter.
P	Rain Bird LXMMPED Metal Pedestal for ESP-LX Series Controllers. 28" x 14-1/4" x 7-1/4". Includes all necessary parts. Powder Coated Steel Material.
L	Rain Bird LIMRKIT (Hand Held Radio Remote) Landscape Irrigation and Maintenance Remote. Maintains Rain Bird system operation and head alignment. Irrigation Contractor will turn over LIMR Kit at final walk-thru.
FS	Creative Sensor Technology FSI-T15-001 1.5" (40mm) PVC tee type flow sensor w/socket ends, custom mounting tee and ultra lightweight impeller enhances low flow measurement. 2 wire digital output compatible w/all irrigation controllers. Flow range 1.8-108 GPM.
F	Netafim (1) DF150-120 & (1) DF200-120 - (Qty 2) 1st Disc Filter 1-1/2", 120 mesh ring, up to 35GPM flow rate. 2nd Disc Filter 2", 120 mesh, up to 120 gpm flow rate.
M1	Water Meter #1, (1-1/2" - @ 75 GPM @ 86 psi)
M2	Water Meter #2, (1" - @ 37 GPM @ 72 PSI)
	Irrigation Lateral Line: PVC Class 200 SDR 21 PVC Class 200 irrigation pipe.
	Irrigation Mainline: PVC Class 200 SDR 21
	Pipe Sleeve: PVC Schedule 40 Min. Sleeve Size 3" Unless Noted

Valve Callout
- Valve Number
- Valve Flow
- Valve Size

VALVE SCHEDULE

NUMBER	MODEL	SIZE	TYPE	PSI	PSI @ POC	GPM	PRECIP
A-1	Rain Bird XCZ-150-PRB-COM	1-1/2"	Area for Dripline	46.80	63.74	33.43	1.55 in/h
A-2	HIT 515-050	1-1/2"	Turf Spray	33.70	56.05	53.16	1.57 in/h
A-3	HIT 515-050	1-1/2"	Turf Spray	34.39	58.49	52.22	1.68 in/h
A-4	HIT 515-050	1-1/2"	Turf Spray	33.35	56.07	44.67	1.59 in/h
A-5	HIT 515-050	1-1/2"	Turf Spray	33.34	61.00	53.17	1.65 in/h
A-6	Rain Bird XCZ-150-PRB-COM	1-1/2"	Area for Dripline	50.97	71.60	40.03	1.55 in/h
A-7	HIT 515-050	1-1/2"	Turf Rotor	51.64	82.48	63.73	0.45 in/h
A-8	HIT 515-050	1-1/2"	Turf Rotor	50.63	76.12	49.44	0.29 in/h
A-9	Rain Bird XCZ-150-PRB-COM	1-1/2"	Area for Dripline	53.43	75.49	40.39	1.55 in/h
A-10	Rain Bird XCZ-150-PRB-COM	1-1/2"	Area for Dripline	52.88	74.72	39.65	1.55 in/h
A-11	Rain Bird XCZ-150-PRB-COM	1-1/2"	Area for Dripline	48.91	69.62	35.97	1.55 in/h
A-12	HIT 515-050	1-1/2"	Turf Spray	35.00	58.90	42.06	1.86 in/h
A-13	HIT 515-050	1-1/2"	Turf Spray	33.55	57.58	41.59	1.94 in/h
A-14	Rain Bird XCZ-150-PRB-COM	1-1/2"	Area for Dripline	47.93	68.92	33.91	1.55 in/h
A-15	Rain Bird XCZ-150-PRB-COM	1-1/2"	Area for Dripline	51.94	75.00	38.93	1.55 in/h
A-16	HIT 515-050	1-1/2"	Turf Spray	32.78	57.93	43.13	2.07 in/h
A-17	Rain Bird XCZ-150-PRB-COM	1-1/2"	Area for Dripline	50.84	73.53	38.36	1.55 in/h
A-18	Rain Bird XCZ-150-PRB-COM	1-1/2"	Area for Dripline	52.11	74.66	39.26	1.55 in/h
A-19	Rain Bird XCZ-150-PRB-COM	1-1/2"	Area for Dripline	52.51	73.76	38.96	1.55 in/h
A-20	HIT 515-050	1-1/2"	Turf Spray	34.18	60.90	54.07	1.77 in/h
A-21	HIT 515-050	1-1/2"	Turf Spray	34.05	61.13	58.04	1.69 in/h
A-22	Rain Bird XCZ-150-PRB-COM	1-1/2"	Area for Dripline	48.72	67.26	34.88	1.55 in/h
A-23	HIT 515-050	1-1/2"	Turf Spray	35.34	60.69	56.16	2.39 in/h
A-24	Rain Bird XCZ-150-PRB-COM	1-1/2"	Area for Dripline	50.53	69.23	37.81	1.55 in/h
A-25	HIT 515-050	1-1/2"	Turf Spray	34.14	56.39	51.91	2.14 in/h
A-26	HIT 515-050	1-1/2"	Turf Spray	34.35	57.45	54.62	1.62 in/h
A-27	Rain Bird XCZ-150-PRB-COM	1-1/2"	Area for Dripline	45.42	61.75	29.32	1.55 in/h
A-28	HIT 515-050	1-1/2"	Turf Spray	33.59	54.88	55.30	1.76 in/h
B-1	HIT 515-050	1-1/2"	Turf Spray	33.58	53.79	29.11	2.27 in/h
B-2	Rain Bird XCZ-150-PRB-COM	1-1/2"	Area for Dripline	48.32	70.82	33.08	1.55 in/h
B-3	Rain Bird XCZ-100-PRB-COM	1"	Area for Dripline	37.11	50.35	8.61	1.55 in/h
B-4	HIT 515-050	1-1/2"	Turf Spray	33.07	50.13	31.71	1.78 in/h
B-5	Rain Bird XCZ-150-PRB-COM	1-1/2"	Area for Dripline	45.91	62.03	29.77	1.55 in/h

WATERING SCHEDULE

NUMBER	MODEL	TYPE	PRECIP	IN /WEEK	MIN /WEEK	GAL /WEEK	GAL /DAY
A-1	Rain Bird XCZ-150-PRB-COM	Area for Dripline	1.55 in/h	0.75	30	1,003	143.3
A-2	HIT 515-050	Turf Spray	1.57 in/h	1.50	58	3,083	1,542
A-3	HIT 515-050	Turf Spray	1.68 in/h	1.50	54	2,820	1,410
A-4	HIT 515-050	Turf Spray	1.59 in/h	1.50	57	2,546	1,273
A-5	HIT 515-050	Turf Spray	1.65 in/h	1.50	55	2,925	1,462
A-6	Rain Bird XCZ-150-PRB-COM	Area for Dripline	1.55 in/h	0.75	30	1,201	171.6
A-7	HIT 515-050	Turf Rotor	0.45 in/h	1.50	199	12,682	6,341
A-8	HIT 515-050	Turf Rotor	0.29 in/h	1.50	309	15,277	7,638
A-9	Rain Bird XCZ-150-PRB-COM	Area for Dripline	1.55 in/h	0.75	30	1,212	173.1
A-10	Rain Bird XCZ-150-PRB-COM	Area for Dripline	1.55 in/h	0.75	30	1,189	169.9
A-11	Rain Bird XCZ-150-PRB-COM	Area for Dripline	1.55 in/h	0.75	30	1,079	154.2
A-12	HIT 515-050	Turf Spray	1.86 in/h	1.50	49	2,061	1,031
A-13	HIT 515-050	Turf Spray	1.94 in/h	1.50	47	1,955	977.3
A-14	Rain Bird XCZ-150-PRB-COM	Area for Dripline	1.55 in/h	0.75	30	1,017	145.3
A-15	Rain Bird XCZ-150-PRB-COM	Area for Dripline	1.55 in/h	0.75	30	1,168	166.9
A-16	HIT 515-050	Turf Spray	2.07 in/h	1.50	44	1,898	949.0
A-17	Rain Bird XCZ-150-PRB-COM	Area for Dripline	1.55 in/h	0.75	30	1,151	164.4
A-18	Rain Bird XCZ-150-PRB-COM	Area for Dripline	1.55 in/h	0.75	30	1,178	168.2
A-19	Rain Bird XCZ-150-PRB-COM	Area for Dripline	1.55 in/h	0.75	30	1,169	167.0
A-20	HIT 515-050	Turf Spray	1.77 in/h	1.50	51	2,757	1,379
A-21	HIT 515-050	Turf Spray	1.69 in/h	1.50	54	3,134	1,567
A-22	Rain Bird XCZ-150-PRB-COM	Area for Dripline	1.55 in/h	0.75	30	1,046	149.5
A-23	HIT 515-050	Turf Spray	2.39 in/h	1.50	38	2,134	1,067
A-24	Rain Bird XCZ-150-PRB-COM	Area for Dripline	1.55 in/h	0.75	30	1,134	162.0
A-25	HIT 515-050	Turf Spray	2.14 in/h	1.50	43	2,232	1,116
A-26	HIT 515-050	Turf Spray	1.62 in/h	1.50	56	3,058	1,529
A-27	Rain Bird XCZ-150-PRB-COM	Area for Dripline	1.55 in/h	0.75	30	879.5	125.6
A-28	HIT 515-050	Turf Spray	1.76 in/h	1.50	52	2,876	1,438
B-1	HIT 515-050	Turf Spray	2.27 in/h	1.50	40	1,164	582.2
B-2	Rain Bird XCZ-150-PRB-COM	Area for Dripline	1.55 in/h	0.75	30	992.5	141.8
B-3	Rain Bird XCZ-100-PRB-COM	Area for Dripline	1.55 in/h	0.75	30	258.3	36.9
B-4	HIT 515-050	Turf Spray	1.78 in/h	1.50	51	1,617	808.7
B-5	Rain Bird XCZ-150-PRB-COM	Area for Dripline	1.55 in/h	0.75	30	893.2	127.6
		TOTALS:			1,737	80,792	34,478

CRITICAL ANALYSIS

Generated:	2015-01-01 10:34
P.O.C. NUMBER: WATER METER 01	
Water Source Information: City Water	
FLOW AVAILABLE	
Water Meter Size:	1-1/2"
Flow Available:	75.00 gpm
PRESSURE AVAILABLE	
Static Pressure at POC:	86.00 psi
Elevation Change:	5.00 ft
Service Line Size:	2"
Length of Service Line:	20.00 ft
Pressure Available:	83.00 psi
DESIGN ANALYSIS	
Maximum Station Flow:	63.73 gpm
Flow Available at POC:	75.00 gpm
Residual Flow Available:	11.27 gpm
Critical Station:	A-7
Design Pressure:	45.00 psi
Elevation Loss:	0.00 psi
Friction Loss:	3.60 psi
Fittings Loss:	0.36 psi
Loss through Valve:	2.67 psi
Pressure Req. at Critical Station:	51.64 psi
Loss for Fittings:	0.71 psi
Loss for Main Line:	7.13 psi
Loss for POC to Valve Elevation:	0.00 psi
Loss for Backflow:	12.30 psi
Loss for Master Valve:	2.67 psi
Loss for Water Meter:	8.02 psi
Critical Station Pressure at POC:	82.47 psi
Pressure Available:	83.00 psi
Residual Pressure Available:	0.53 psi

CRITICAL ANALYSIS

Generated:	2015-02-24 07:59
P.O.C. NUMBER:02	
Water Source Information:	WM# 2 - 37.5 GPM @ 60 PSI
FLOW AVAILABLE	
Water Meter Size:	1"
Flow Available:	37.50 gpm
PRESSURE AVAILABLE	
Static Pressure at POC:	75.00 psi
Elevation Change:	5.00 ft
Service Line Size:	1 1/4"
Length of Service Line:	20.00 ft
Pressure Available:	72.00 psi
DESIGN ANALYSIS	
Maximum Station Flow:	33.08 gpm
Flow Available at POC:	37.50 gpm
Residual Flow Available:	4.42 gpm
Critical Station:	B-2
Design Pressure:	30.00 psi
Elevation Loss:	0.00 psi
Friction Loss:	2.93 psi
Fittings Loss:	0.29 psi
Loss through Valve:	15.10 psi
Pressure Req. at Critical Station:	48.33 psi
Loss for Fittings:	0.50 psi
Loss for Main Line:	4.99 psi
Loss for POC to Valve Elevation:	0.00 psi
Loss for Backflow:	10.44 psi
Loss for Water Meter:	6.56 psi
Critical Station Pressure at POC:	70.82 psi
Pressure Available:	72.00 psi
Residual Pressure Available:	1.18 psi

UNDERGROUND CABLE LOCATE

Call: TOLL FREE 1-800 432-4770 OR 811

CALL TWO WORKING DAYS BEFORE YOU DIG

SYSTEM CRITERION: THIS IRRIGATION SYSTEM WAS DESIGNED WITH CITY WATER AS THE PRIMARY WATER SOURCE. THE SYSTEM WAS DESIGNED WITH 75 G.P.M. @ 86 P.S.I. THE IRRIGATION CONTRACTOR WILL VERIFY GPM & PSI PRIOR TO STARTING THE WORK. THE CITY WATER PRESSURE IS UNKNOWN SO A BOOSTER PUMP MUST BE NEEDED ON THIS PROJECT.

— LATERAL LINE

— — PVC MAINLINE

DUE TO LACK OF SPACE ON THE PLAN "JUMPER'S" ARE NOT USED TO CROSS THE MAINLINE OVER LATERAL LINE.

NOTE:
THE IRRIGATION CONTRACTOR SHALL WIPE ALL EXCESS CEMENT OFF THE PIPE AND FITTINGS IMMEDIATELY AFTER CEMENTING THE PIPE. PIPE AND FITTINGS FOUND WITH EXCESS PVC CEMENT WILL ORDERED TO BE REMOVED AND REPLACED AT THE EXPENSE OF THE IRRIGATION CONTRACTOR.

NOTE:
THE PLAN MAY NOT INCLUDE ALL MATERIALS. THIS DOESN'T RELIEVE THE CONTRACTOR FROM BEING RESPONSIBLE TO PROVIDE A COMPLETE SYSTEM IN PERFECT WORKING ORDER.

VERIFY THE FINAL LOCATION FOR THE SPRINKLER CONTROLLER WITH THE LANDSCAPE ARCHITECT, OWNER PRIOR TO INSTALLATION, EXACT LOCATION MUST BE APPROVED IN WRITING.

NOTE:
POC, WATER METER ASSEMBLY ARE SHOWN IN A GENERAL LOCATION DUE TO LACK OF SPACE ON PLANS, VERIFY FINAL LOCATION WITH OWNER OR LANDSCAPE ARCHITECT.

NOTE:
THE OWNER WILL PROVIDE 120V ELECTRICAL POWER FOR THE CONTROLLER PRIOR TO THE CONTRACTOR STARTING THE WORK.

NOTE:
THE IRRIGATION CONTRACTOR WILL READ ALL SPECIFICATIONS AND REVIEW ALL DETAILS AND EXAMINE THESE PLANS PRIOR TO BIDDING THIS PROJECT. CHANGE ORDERS WILL NOT BE AUTHORIZED FOR MATERIALS LEFT OFF THE BID. FAILURE TO READ THIS INFORMATION IS AN UNACCEPTABLE EXCUSE IF YOU UNDERBID THIS JOB.

NOTE:
DUE TO LACK OF SPACE ON PLANS MAINLINE, LATERAL LINE'S AND ZONE VALVE (S) MAY BE SHOWN OUTSIDE PLANTER BED. CONTRACTOR WILL INSTALL ALL MAINLINE AND LATERAL LINE INSIDE PLANTER BED WHENEVER POSSIBLE, OTHERWISE SLEEVE ALL PIPE THAT CAN NOT BE INSTALLED INSIDE THE PLANTER BED.

NOTE:
THE OWNER IS RESPONSIBLE FOR THE COST OF BUILDING PERMITS, WATER METER AND ELECTRICAL SERVICE AND THE BACKFLOW PREVENTER.

NOTE:
WIRE SPLICES MADE OUTSIDE OF THE ZONE VALVE BOX ENCLOSURE WILL BE REMOVED AND REPLACED AT THE EXPENSE OF THE CONTRACTOR.

NOTE:
INSTALL PULL BOXES ON BOTH SIDES OF EVERY PAVED CROSSING INSTALL SCH40 GRAY CONDUIT WITH LONG SWEEP ELECTRICAL ELBOWS, CAP RISER.

NOTE:
THE CONTRACTOR WILL COMMENCE WORK AFTER THE PLANS & SITE HAVE BEEN FOUND FREE FROM CONFLICTS AND AFTER RECEIVING APPROVAL FROM THE LANDSCAPE ARCHITECT.

NOTE:
CONTRACTOR WILL VERIFY MATERIAL DIMENSIONS ON CONSTRUCTION DOCUMENTS, IF A CONFLICT IS FOUND DO NOT START THE WORK AND NOTIFY THE LANDSCAPE ARCHITECT & OWNER.

NOTE:
CONTRACTOR SHALL INSTALL SLEEVES 2x TIMES THE SIZE OF THE DIAMETER PIPE OF THE ITEM BEING SLEEVED. INSTALL ONLY ONE ITEM PER SLEEVE. DON'T BACKFILL WITHOUT APPROVAL FROM OWNER.

NOTE:
SEE DETAILS FOR INFORMATION ABOUT DEPTH OF MAINLINE (18") AND LATERAL (12"). CALL UNDERGROUND SERVICE ALERT BEFORE YOU DIG!

NOTE:
INSTALL ALL SPRINKLER HEADS FLUSH WITH GRADE & PERPENDICULAR WITH FINISHED GRADE. TILTED SPRINKLER'S WILL BE REJECTED.

IRRIGATION GENERAL NOTES

1. ALL INSTALLED IRRIGATION PRODUCTS, MATERIALS, AND CONSTRUCTION WILL CONFORM TO LOCAL, CITY AND STATE CODES, GUIDELINES, INDUSTRY STANDARDS AND MANUFACTURERS SPECIFICATIONS FOR IRRIGATION CONSTRUCTION.
2. THE CONTRACTOR WILL PROVIDE A CERTIFICATE OF TRAINING CONFIRMING THE PERSON OR PERSONS PERFORMING SPRINKLER MAINTENANCE FOR THIS PROJECT HAS BEEN PROPERLY TRAINED BY THE IRRIGATION CONTRACTOR PRIOR TO THE FINAL WALK THROUGH SITE INSPECTION.
3. CONTRACTOR WILL STAKE/FLAG NEW HEAD LOCATIONS BY SURVEY AND HAVE LAYOUT APPROVED BY THE IRRIGATION CONSULTANT, LANDSCAPE ARCHITECT OR BY THE OWNERS REPRESENTATIVE PRIOR TO INSTALLING THE SPRINKLER HEADS.
4. CONTRACTOR WILL VERIFY THE EXISTENCE AND LOCATION OF ALL UNDERGROUND UTILITIES AND SERVICES WITH THE CITY OR STATE OF FL UNDERGROUND CABLE LOCATES @ 1-800 432-4770.
5. CONTRACTOR WILL BE RESPONSIBLE FOR SITE SAFETY, SECURITY FENCING AND LOCKED STORAGE DURING CONSTRUCTION AND WILL BE BONDED, STATE LICENSED AND INSURED.
6. CONTRACTOR WILL BE RESPONSIBLE FOR SCHEDULING ALL REQUIRED SITE INSPECTIONS WITH THE LANDSCAPE ARCHITECT. THE IRRIGATION CONSULTANT WILL BE PRESENT AT ALL SITE INSPECTIONS. CONTRACTOR WILL CONTACT "SPRINKLER CONSULTANT" @ (407) 830-7041, MR. BILL CURTIS TO REQUEST A SITE INSPECTION (3) DAYS IN ADVANCE. THERE WILL BE ONE (1) PRE-INSTALLATION MEETING, TWO (2) TYPICAL SITE INSPECTIONS AND ONE FINAL WALK-THRU INSPECTION TO CERTIFY THE PROJECT HAS BEEN CORRECTLY INSTALLED.
7. WIRE CONDUIT WILL BE INSTALLED ADJACENT TO MAINLINE SLEEVING UNDER ALL PAVED SURFACES. WATER LINES AND IRRIGATION CONTROL WIRE WILL NOT SHARE SAME SLEEVE. IRRIGATION WIRE WILL BE INSTALLED INSIDE 1 1/2" GRAY PVC SCH40 ELECTRICAL CONDUIT SLEEVE UNDER ALL PAVED ROAD CROSSINGS. INSTALL SCH40 ELECTRICAL LONG SWEEP ELBOWS INTO AND OUT OF ALL PULL BOXES INSTALLED ON THIS PROJECT.
8. THE CONTRACTOR WILL MONITOR AND ADJUST SPRINKLER ARCS AND RADII THROUGHOUT MAINTENANCE PERIOD TO ENSURE HEAD-TO-HEAD COVERAGE IS MAINTAINED AND THAT THE SPRINKLER HEADS DO NOT OVERSPRAY ONTO ADJACENT SURFACES.
9. CONTRACTOR WILL MONITOR AND ADJUST THE WATER SCHEDULE SEASONALLY AND AS NEEDED TO ENSURE THAT PLANT WATER REQUIREMENTS ARE MET AND NOT OVER WATERED.
10. THE IRRIGATION PLAN IS DIAGRAMMATIC/SCHEMATIC. IT IS THE RESPONSIBILITY OF THE CONTRACTOR TO ENSURE PROPER SPRINKLER HEAD SPACING AND COVERAGE. ROUTINGS ON THIS PLAN ARE SCHEMATIC ONLY AND WILL BE ADJUSTED FOR ON-SITE CONDITIONS BY THE IRRIGATION CONTRACTOR.
11. IRRIGATION CONTROLLER LOCATION FOR INSTALLATION WILL BE APPROVED BY THE IRRIGATION CONSULTANT AND/OR THE LANDSCAPE ARCHITECT PRIOR TO BEING INSTALLED.
12. IRRIGATION CONTRACTOR WILL COORDINATE POWER SUPPLY AND PERMITTING FOR IRRIGATION CONTROLLER WITH THE OWNER.
13. THE SPECIFIED IRRIGATION CONTROL PACKAGE, I.E., RAIN BIRD ESP-LXM SERIES CONTROLLER, IS CAPABLE OF OPERATING TWO (2) OR MORE ZONES AT A TIME TO REDUCE WATERING TIME. THE IRRIGATION CONTRACTOR MAY SET THE FLOW MANAGER TO USE NO MORE THAN 75 GPM ON THE 1 ½" WATER METER - #1 AND NO MORE THAN 37 GPM ON WATER METER #2. THE IRRIGATION CONTRACTOR IS ADVISED NOT TO PROGRAM THE CONTROLLER FOR MORE GPM THAN EITHER WATER METER CAN PROVIDE, AS THIS WILL CAUSE SYSTEM FAILURE.
14. INSTALL UL/UF, SOLID WIRE, UNDER GROUND DIRECT BURIAL WIRE, TO CONNECT ZONES TO THE IRRIGATION CONTROLLER, I.E., CONTROL WIRE WILL BE ONE (1) #14 GA UL/UF 600V, (RED WIRE) AND COMMON WIRE WILL BE (1) #12 GA UL/UF 600V, (WHITE WIRE). THE IRRIGATION CONTRACTOR WILL INSTALL (2) SPARE BLUE WIRES, #14 GA UL/UF 600V TO LIMIT OF WORK IT BOTH DIRECTIONS FROM THE IRRIGATION CONTROLLER.
15. THE IRRIGATION CONTRACTOR WILL READ ALL SPECIFICATIONS, DETAILS AND THESE PLANS BEFORE BIDDING THIS PROJECT AS SHOWN ON THESE PLANS. FAILURE TO READ THE PLANS, SPECIFICATION AND DETAILS IS NOT AN ACCEPTABLE EXCUSE FOR LEAVING MATERIAL OFF THE IRRIGATION BID PACKAGE.
16. MATERIAL SUBSTITUTIONS ARE NOT ALLOWED ON THIS PROJECT, THE ONLY EXCEPTION IS, IF A PRODUCT HAS BECOME OBSOLETE. IF MATERIAL SUBSTITUTIONS ARE APPROVED AND THE EXPENSE FOR THE PRODUCTS IS LESS THAN THE ORIGINAL MATERIALS, THAT AMOUNT WILL BE DEDUCTED FROM THE CONTRACT AMOUNT. IF THE COST OF THE MATERIAL SUBSTITUTION IS MORE THE CONTRACT AMOUNT WILL REMAIN UNCHANGED AND WILL NOT BE INCREASED UNDER ANY CIRCUMSTANCES. A REQUEST FOR A CHANGE ORDER FOR MATERIAL SUBSTITUTION MUST BE IN WRITING AND SENT TO THE LANDSCAPE ARCHITECT AND IRRIGATION CONSULTANT FOR APPROVAL.
17. HYDRAULIC DESIGN BASED UPON 75.0 GPM OPERATING AT 86.0 PSI STATIC PRESSURE AT WATER METER #1. A PUMP STATION MAY BE REQUIRED ON BOTH POINTS OF CONNECTION.
18. PRIOR TO BIDDING THIS PLAN THE IRRIGATION CONTRACTOR WILL VERIFY AND CONFIRM IN WRITING TO THE LANDSCAPE ARCHITECT THERE IS SUFFICIENT WATER PRESSURE AVAILABLE FOR THE IRRIGATION SYSTEM TO OPERATE CORRECTLY. BOOSTER PUMP(S) MAY BE NEEDED DUE TO LOW PRESSURE AVAILABLE AT EITHER OR BOTH POC'S. THE CONTRACTOR WILL VERIFY EXISTING P.S.I., PRIOR TO BIDDING THIS CONTRACT AND CONSIDER BOOSTER PUMPS IN BID IF REQUIRED.

EXAMPLE ONLY - OF RUN TIME SCHEDULE			
STATION	ZONE TYPE	VALVES COMBINED	TOTAL COMBINED GPM
1	Dripline Area	A-1 & A-6	73.46 GPM
2	Dripline Area	A-10 & A-14	73.56 GPM
3	Turf Spray	A-4 & A-12	72.03 GPM
4	Dripline Area	A-9 & A-27	69.71 GPM
THIS CHART IS AN EXAMPLE ONLY, IT IS NOT APPLICABLE TO THIS PROJECT			

GENERAL IRRIGATION CONTROLLER PROGRAMING INSTRUCTIONS:

1. THE RAIN BIRD IRRIGATION TIMER HAS A "FLOW MANAGER" AND CAPACITY TO OPERATE UP TO FOUR (4) ZONE VALVES SIMULTANEOUSLY.
2. THE IRRIGATION CONTRACTOR WILL COMBINE LIKE AREA ZONE VALVES ON EACH STATION TOGETHER, I.E., (TURF SPRAY), (DRIP AREA) OR (TURF ROTARY) ZONES, SO AS NOT TO EXCEED 75 GPM ON WATER METER #1 AND 37 GPM ON WATER METER #2.
3. THE IRRIGATION CONTRACTOR WILL SET THE "FLOW MANAGER" FOR A HIGH FLOW SHUT DOWN OF THE MASTER VALVE WHEN THE FLOW IS ABOVE 10% OF THE MAXIMUM FLOW OF COMBINED ZONE VALVES, THIS WILL SHUT DOWN THE MASTER VALVE.
4. THE IRRIGATION CONTRACTOR WILL CREATE A FINAL WATERING TABLE OF COMBINED ZONE VALVES, THAT WILL INCLUDE WATERING RUN TIMES AND TOTAL GPM PER EACH STATION, INCLUDING ALL VALVES THAT OPERATE AT THE SAME TIME ON THAT STATION, AS SHOWN IN THE EXAMPLE ABOVE. THE CONTRACTOR WILL TURN THIS DOCUMENT OVER TO THE OWNER AT THE FINAL WALK THRU SITE INSPECTION.

NOTES - SITE INSPECTIONS AND MATERIAL SUBSTITUTIONS:

1. THIS IRRIGATION INSTALLATION WILL HAVE (4) SITE INSPECTIONS. THE COST FOR (3) SITE INSPECTIONS PLUS THE (1) FINAL WALK-THROUGH SITE INSPECTION WILL BE INCLUDED AS PART OF THIS PROJECT BID PACKAGE. THE COST FOR EACH SITE INSPECTION, BY THE SPRINKLER CONSULTANT, WILL BE $500.00 PLUS MILEAGE AT $ 0.55 PER MILE FROM ORLANDO, FL., TO THE SITE, WHICH IS APPROXIMATELY 50 MILES. THE CONTRACTOR SHALL ADD THE COMBINED AMOUNT OF DAILY FEE'S FOR 4 SITE VISITS PLUS MILEAGE INTO HIS FINAL BID PRICE.
2. THE FIRST SITE VISIT WILL BE A PRE-INSTALLATION MEETING WITH THE IRRIGATION CONTRACTOR AND THE IRRIGATION CONSULTANT. THE IRRIGATION CONTRACTOR WILL CONTACT "SPRINKLER CONSULTANT" TO SCHEDULE SITE MEETINGS/INSPECTIONS, MR. BILL CURTIS @ (407) 830-7041, EMAIL ADDRESS: sprinkler-consultant@earthlink.net.
3. THE IRRIGATION CONTRACTOR WILL SUBMIT IN WRITING TO THE LANDSCAPE ARCHITECT A REQUEST FOR EACH SITE INSPECTION BY THE SPRINKLER CONSULTANT AT LEAST 3 DAYS IN ADVANCE.
4. THE CONTRACTOR WILL HAVE ON-SITE AN UP TO DATE AS-BUILT PLAN READY FOR EACH SITE INSPECTION. IF THE AS-BUILT PLAN IS NOT UP TO DATE OR NOT AVAILABLE ON-SITE FOR THE SITE INSPECTION, "SPRINKLER CONSULTANT" WILL IMMEDIATELY TERMINATE THE INSPECTION, INVOICE THE CONTRACTOR THE FULL AMOUNT FOR THE SITE VISIT; THE CONTRACTOR WILL RESCHEDULE ANOTHER SITE INSPECTION, WHICH ALSO WILL BE INVOICED AND THE IRRIGATION CONTRACTOR WILL PAY FOR.

IRRIGATION MATERIALS:

a. MATERIAL SUBSTITUTIONS WILL NOT BE ACCEPTED ON THIS PROJECT WITH THE ONLY EXCEPTION OF, I.E., IF THE MANUFACTURER HAS DISCONTINUED A CERTAIN PRODUCT.

b. THE CONTRACTOR WILL SUBMIT HIS BID TO THE OWNER BASED ON ALL THE ITEMS SHOWN IN THE MATERIAL SCHEDULE, THE DETAILS AND SPECIFICATIONS SECTIONS.

c. IF A MATERIAL HAS BEEN DISCONTINUED THE IRRIGATION CONTRACTOR MAY SUBMIT IN WRITING TO THE OWNER A "REQUEST FOR SUBSTITUTION". THE "REQUEST FOR SUBSTITUTION" WILL INCLUDE ANY PRICE DIFFERENCE BETWEEN THE DISCONTINUED PRODUCT AND THE SUBSTITUTED PRODUCT. IF THE PRODUCT BEING SUBSTITUTED IS LESS COSTLY THE CONTRACT AMOUNT WILL BE REDUCED BY THAT AMOUNT, IF THE MATERIAL IS MORE EXPENSIVE THE CONTRACT AMOUNT WILL REMAIN UNCHANGED, AS THE CONTRACTOR WAS INFORMED TO VERIFY SPECIFIED EQUIPMENT BEFORE BIDDING THIS PROJECT AND SHOULD HAVE BEEN AWARE OF ANY DISCONTINUED PRODUCT AND NOTIFIED THE LANDSCAPE ARCHITECT OR IRRIGATION CONSULTANT PRIOR TO BIDDING THE PROJECT.

d. IF MATERIALS ARE FOUND INSTALLED ON SITE, WHICH ARE NOT SPECIFIED ON THESE PLANS, THE OWNER WILL WITHHOLD BOTH PROGRESS AND FINAL PAYMENTS UNLESS OR UNTIL THE UNAUTHORIZED SUBSTITUTED MATERIALS HAVE BEEN REMOVED AND REPLACED WITH THE SPECIFIED MATERIALS, AT THE CONTRACTOR EXPENSE AND AT NO ADDITIONAL COST TO THE OWNER.

LIABILITY STATEMENT:

THE PURPOSE OF THIS IRRIGATION PLAN IS TO PROVIDE A PHYSICAL DESIGN OF IRRIGATION EQUIPMENT TO ASSIST THE CONTRACTOR IN ACCURATELY ESTIMATING THE COSTS TO BID THIS SPRINKLER SYSTEM. PRIOR TO BIDDING THIS CONTRACT THE IRRIGATION CONTRACTOR WILL VERIFY ALL IRRIGATION MATERIALS, MODEL NUMBERS, DIMENSIONS, COMPATIBILITY OF COMPONENT ASSEMBLIES, MAINLINE AND LATERAL ZONE HYDRAULICS, ELECTRICAL COMPONENTS, WIRING, SLEEVES, WATER SOURCE'S FOR PRESSURE & GPM AVAILABLE, AND ALL APPLICABLE SITE CONDITIONS, WHICH MAY ADVERSELY AFFECT EITHER THE COST OR PERFORMANCE OF THIS SPRINKLER SYSTEM. IF A CONFLICT IS FOUND THE CONTRACTOR WILL NOTIFY THE LANDSCAPE ARCHITECT IN WRITING AND WILL NOT BID THIS SPRINKLER SYSTEM UNTIL THE CONFLICT HAS BEEN RESOLVED. THIS SPRINKLER SYSTEM DESIGN WAS ENGINEERED BASED ON THE MANUFACTURERS HYDRAULIC SPECIFICATIONS FOR EACH PRODUCT. THE CONTRACTOR WILL INSTALL ONLY THE SPECIFIED PRODUCTS AS SHOWN IN THE MATERIAL LEGEND AND IN THE DETAIL SECTION, EQUIPMENT SUBSTITUTIONS ARE NOT PERMITTED ON THIS PROJECT. "IRRIGATION CONSULTANT" WILL BE HELD HARMLESS IF THE SPECIFIED PRODUCTS ARE SWITCHED OUT BY THE CONTRACTOR WITH MATERIALS NOT SPECIFIED. IF THE CONTRACTOR WILLFULLY SUBSTITUTES PRODUCTS HE WILL BE HELD LIABLE AND THE OWNER MAY TERMINATE THE CONTRACT FOR JUST CAUSE.

IT IS NEITHER EXPRESSED NOR IMPLIED IN ANY WAY THIS DESIGN IS PERFECT, AS THE IRRIGATION DESIGN MAY VARY FROM THE FINAL ACTUAL SITE CONDITIONS. THE IRRIGATION CONTRACTOR WILL BASE HIS BID FOR THIS WORK ON SUPPLYING ALL SPECIFIED MATERIALS TO COMPLETE THE SPRINKLER SYSTEM IN PERFECT WORKING CONDITION. THESE PLANS NEITHER EXPRESS NOR IMPLY ANY TYPE OF MATERIAL TRADE OR INSTALLATION GUARANTEE. STARTING FROM THE DAY THE IRRIGATION CONTRACTOR SIGNS THIS CONTRACT, CONTINUING IN PERPETUITY, THE CONTRACTOR ACKNOWLEDGES HIS SOLE LIABILITY TO PAY FOR ANY AND ALL DAMAGE OR INJURY CLAIMS FILED AGAINST THE OWNERS PROPERTY OR PROPERTY ADJACENT TO THE OWNERS PROPERTY. THE IRRIGATION CONTRACTOR AGREES TO INDEMNIFY "SPRINKLER CONSULTANT" FOR ANY TYPE OF CIVIL OR CRIMINAL COURT ACTION TAKEN AGAINST THE IRRIGATION CONTRACTOR FOR ANY REASON. THE IRRIGATION CONTRACTOR AGREES TO PAY ALL LEGAL FEES, FINES, SETTLEMENTS AND ALL OTHER COSTS MENTIONED OR NOT MENTIONED HEREIN, WHICH MAY RESULT FROM PROPERTY DAMAGE, PERSONAL BODILY INJURY OR ANY OTHER DAMAGE CAUSED DURING THE INSTALLATION OF OR BY THE OPERATION OF THIS SPRINKLER SYSTEM. "SPRINKLER CONSULTANT" WILL NOT UNDER ANY CONDITIONS OR CIRCUMSTANCES BE HELD LIABLE FOR ANY INDIRECT, INCIDENTAL, CONSEQUENTIAL OR OTHER DAMAGES, NO MATTER HOW THEY OCCUR.

ANCILLARY IRRIGATION MATERIALS REQUIRED ON PROJECT

NO.	DESCRIPTION	MODEL #	SIZE	MFG.	PHONE #
1.	PVC PIPE CEMENT	RED HOT BLUE	QT. OR GALLON CAN	T. CHRISTY'S	(800) 258-4583
2.	PVC PIPE PRIMER	PURPLE PRIMER	QT. OR GALLON CAN	T. CHRISTY'S	(800) 258-4583
3.	PVC (GLUE-ON FITTINGS)	SCH 40 & SCH 80	3/4" TO 3"	LASCO	(800) 327-6390
4.	WIRE SPLICES GEL FILLED	DBC-DR	18 GA TO 12 GA	RAIN PRO	(800) 468-0071
5.	TEFLON TAPE	TEFLON-075	3/4"x520 INCHES	T. CHRISTY'S	(800) 724-6247
6.	VALVE MARKING I.D. TAGS	ID-STD-Y-2	BOTH SIDES	T. CHRISTY'S	(800) 724-6247
7.	ELECT WARNING TAPE	TA-DT-2-RE	2"x1000'	T. CHRISTY'S	(800) 724-6247
8.	EMPTY QT CEMENT CAN	RH-C32	QUART CAN	T. CHRISTY'S	(800) 724-6247
9.	SOLVENT DAUBBER	RH-D32	QUART CAN	T. CHRISTY'S	(800) 724-6247
10.	SWING JOINT FOR SPRAY SPRINKLER HEADS	SJA2-1205	1/2" MPT ENDS W/12" LAY LENGTH	RAIN PRO	(800) 468-0071
11.	SWING JOINT FOR GEAR ROTOR SPRINKLER	SA-127575	3/4" MPT ENDS W/12" LAY LENGTH	RAIN BIRD	(800) 724-6247
12.	IRRIGATION EQUIPMENT MARKING FLAGS	2 1/2" x 3 1/2"	15-1/2 GA STEEL- MULTI COLORED	BLACKBURN	(800) 942-5816
13.	UNION, PVC SCH80	SEE LASCO	SIZE PER RCV OUTLET	LASCO	(800) 327-6390
14.	VALVE BOX 10" ROUND	VB-10RND	10" ROUND BODY & PURPLE LID	RAIN BIRD	(800) 724-6247
15.	VALVE BOX 12" STANDARD	VB-STD	12" STANDARD BODY & PURPLE LID	RAIN BIRD	(800) 724-6247
16.	VALVE BOX JUMBO (BODY AND LID)	VB-JMBP	JUMBO BODY WITH PURPLE LID	RAIN BIRD	(800) 724-6247
17.	HAND HELD RADIO REMOTE	LIMR	RADIO REMOTE	RAIN BIRD	(800) 724-6247
18.	CONTROL WIRE UL/UF, 600V DIRECT BURIAL	14-1 RED	14-1 UL/UF AWG SOLID WIRE	PAIGE ELECT.	(800) 228-7137
19.	COMMON WIRE, UL/UF, 600 V DIRECT BURIAL	#14 WHITE	14-1 UL/UF AWG SOLID WIRE	PAIGE ELECT.	(800) 228-7137
20.	SPARE WIRE, UL/UF, 600 V DIRECT BURIAL	#14 BLUE	14-1 UL/UF AWG SOLID WIRE	PAIGE ELECT.	(800) 228-7137

DETAIL REPORT

NUMBER	TITLE	DETAIL
01/IRR-4	6" POP-UP SPRINKLER RAIN-PRO 906-CKV-30 PRD-NP	328403.15-170
02/IRR-4	REMOTE CONTROL VALVE, RAIN PRO, 500-R SERIES	328406.50-084
03/IRR-4	MASTER VALVE & FLOW SENSOR INSTALLATION DETAIL	328409.63-15
04/IRR-4	MASTER VALVE, RAIN PRO, 500-R SERIES	328406.50-150
05/IRR-4	NETAFIM 2" DUAL FILTER #25A30-200 MESH	328414-09
06/IRR-4	RAIN BIRD XCZ-PRB-150-COM 1.5" COMMERCIAL VALVE	328413.76-43
07/IRR-4	WIRE SPLICE CONNECTOR RAIN PRO (#DBC-BR)	328410.18-02
08/IRR-4	WR-2 SERIES WIRELESS RAIN SENSOR	328411-38
09/IRR-4	GROUNDING DETAIL UP TO 64 STATIONS	328480.82-01
10/IRR-4	PULL BOX	328477-14
11/IRR-4	GENERAL TRENCHING	328477-31
12/IRR-4	SLEEVE UNDER PAVEMENT	328477-32
13/IRR-4	ROAD CROSSING INSTALLATION	328477-33
14/IRR-4	ISOLATION GATE VALVE WITH WHEEL HANDLE	328406.33-41
15/IRR-4	RAIN BIRD "XFD-INPVC" INSERT ADAPTER	328413.05-02
16/IRR-4	RAIN BIRD "XFPVCADP" INSERT ADAPTER	328413.05-01
17/IRR-4	ANTELCO ASTA HOLD DOWN STAKE # 43615	328415.21-01
18/IRR-5	RAINBIRD DRIPLINE - 12" O.C. - ROWS 12" O.C.	328413.56-59
19/IRR-5	RAIN BIRD XFD ON-SURFACE DRIPLINE	328413.56-40
20/IRR-5	DISTANCE SPACING OF LATERAL PIPE	328413.05-04
21/IRR-5	DRIPLINE TUBING FOR SHRUBS AND GROUND COVER AREA'S	328413.85-05
22/IRR-5	RAIN BIRD DRIPLINE TUBING LENGTH CHART	328413.85-10
23/IRR-5	XFD ON-SURFACE DRIPLINE AT GRADE	328413.85-12
24/IRR-5	RAIN BIRD XF™ SERIES 17MM INSERT FITTINGS	328413.85-15
25/IRR-5	DRIPLINE TO MANIFOLD "XPANDO" ADAPTER CONNECTION	328413.56-50
26/IRR-5	ANTELCO - FLUSH VALVE FOR INLINE DRIP TUBING	328413.05-08
27/IRR-6	DRIP MANIFOLD & RISER SIZING FOR VARIOUS GPM FLOW	328413.05-20
28/IRR-6	AIR/VACUUM RELEASE VALVE	328413.53-23
29/IRR-6	RAIN BIRD ESP-LXM, PEDESTAL MOUNT	328410.03-27
30/IRR-6	RAIN BIRD DRIPLINE WITH INSERT ADAPTERS	328413.05-06
31/IRR-7	SPECIFICATIONS	328489-16
32/IRR-7	RAIN BIRD LIMR HAND HELD REMOTE	328410.15-17
33/IRR-7	CST TEE MOUNT FLOW SENSOR INSTALLATION	328485-05
34/IRR-7	RAIN BIRD 6" POP-UP ROTOR (5006+) PRS SAM	32 8404.05-12

SHEET INDEX

SHEET	DESCRIPTION
IRR-1	IRRIGATION PLAN
IRR-2	IRRIGATION PLAN
IRR-3	IRRIGATION SCHEDULES & NOTES
IRR-4	IRRIGATION DETAILS
IRR-5	IRRIGATION DETAILS
IRR-6	IRRIGATION DETAILS
IRR-7	IRRIGATION SPECIFICATIONS

1925 Prospect Ave.
Orlando, FL 32814
P (407) 661-9100
F (407) 661-9101
www.c-p.com

Cuhaci & Peterson
Architects Engineers Planners
ORLANDO • PHILADELPHIA

CLIENT NAME
SRK Lady Lake 43 Associates, L.L.C.
4053 Maple Road
Amherst, NY 14226-1072

PROJECT NAME
Lady Lake Crossing East
@ SR 500 & US 27
Lady Lake, FL
Grey Shell Building

SHEET TITLE
IRRIGATION SCHEDULES & NOTES

SPRINKLER CONSULTANT
WILLIAM B. CURTIS
Phone: (407) 830-7041
sprinkler-consultant@earthlink.net

RELEASE

PROJECT NO. 2136712
DATE 1/12/15
DRAWN
CHECKED

IRR-3

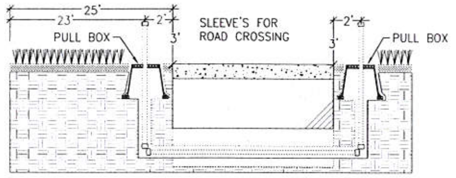

THE SLEEVING CONTRACTOR WILL INSTALL ROAD CROSSING SLEEVES ON BOTH SIDES OF ALL PAVED ROAD CROSSINGS, WITH A 25'-0" CLEARANCE ON ONE SIDE OF PAVING WITH A 36" RISER ABOVE GRADE TO LOCATE THE SLEEVES AT A LATER DATE. FOR FUTURE IDENTIFICATION OF SLEEVES BY THE IRRIGATION CONTRACTOR, THE SLEEVING CONTRACTOR WILL PAINT EACH RISER AND CAP USING THE FOLLOWING COLOR CODES, "MAINLINE-BLACK", "LATERAL LINE-BLUE" AND "CONTROL WIRE-RED". SEE "DETAIL FOR "PULL BOXES". DO NOT GLUE CAPS ONTO SLEEVING.

THE IRRIGATION CONTRACTOR WILL INSTALL (PULL BOX) ON BOTH SIDES OF ALL PAVED ROAD CROSSING. ELEVATED RISER'S WILL BE REPLACED WITH PULL BOXES BY THE IRRIGATION CONTRACTOR WHEN THE WIRING IS INSTALLED. INSTALL A ROPE INSIDE OF SLEEVING TO ALLOW PULLING THE WIRE THROUGH THE WIRE SLEEVE AT THE TIME OF INSTALLATION.

13 ROAD CROSSING INSTALLATION

N.T.S. 328477-33

BRONZE GATE VALVE - MATCO MODEL #514T08 LINE SIZE (1/2" - 3")

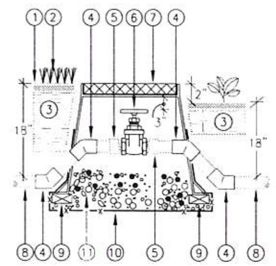

1. FINISH GRADE OR TOP OF MULCH.
2. PLANT MATERIAL, TURF, SHRUB OR GROUND COVER.
3. CLEAN SOIL AMENDED OR NATIVE, FREE OF DEBRIS.
4. ELBOW 45°, SCH40, VALVE INLET SIZE, 4 REQUIRED.
5. MALE ADAPTER, PVC SCH40. SIZE PER VALVE INLET.
6. GATE VALVE. LINE SIZE, SEE PLAN.
7. VALVE BOX, RAINBIRD VB-STD, HEAT STAMPED "G.V."
8. MAINLINE - PVC PIPE, SEE PLAN.
9. BRICK SUPPORTS 1 OF 4.
10. 1/2" WIRE CLOTH GOPHER SCREEN, WRAP UP ALL SIDES.
11. 3-CUBIC FT OF 3/4" CRUSHED ROCK.

NOTES:
USE ONLY NON-HARDENING TEFLON PIPE SEALANT ON ALL THREADED CONNECTIONS. INSTALL 45° ELBOWS TO ACHIEVE CORRECT DEPTH.

14 ISOLATION GATE VALVE WITH WHEEL HANDLE

N.T.S. 328406.33-41

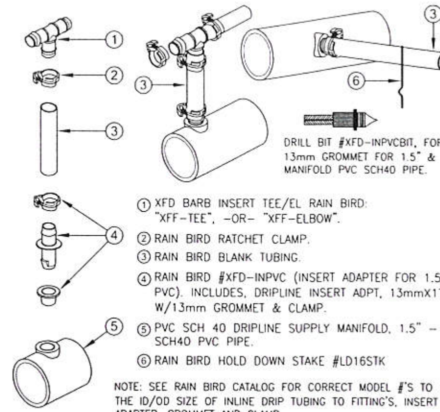

1. XFD BARB INSERT TEE/EL RAIN BIRD: "XFF-TEE", -OR- "XFF-ELBOW".
2. RAIN BIRD RATCHET CLAMP.
3. RAIN BIRD BLANK TUBING.
4. RAIN BIRD #XFD-INPVC (INSERT ADAPTER FOR 1.5" & 2" PVC). INCLUDES, DRIPLINE INSERT ADPT, 13mmX17mm, W/13mm GROMMET & CLAMP.
5. PVC SCH 40 DRIPLINE SUPPLY MANIFOLD, 1.5" - 2" SCH40 PVC PIPE.
6. RAIN BIRD HOLD DOWN STAKE #LD16STK

NOTE: SEE RAIN BIRD CATALOG FOR CORRECT MODEL #'S TO MATCH THE ID/OD SIZE OF INLINE DRIP TUBING TO FITTING'S, INSERT ADAPTER, GROMMET AND CLAMP.

15 RAIN BIRD "XFD-INPVC" INSERT ADAPTER

N.T.S. 328413.05-02

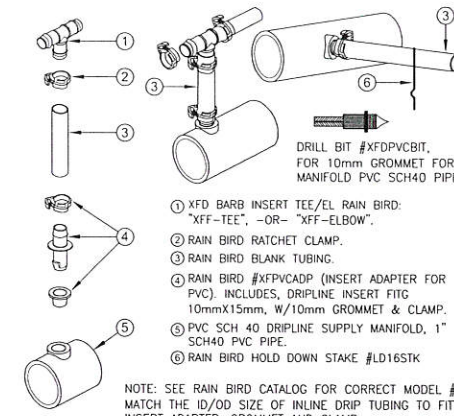

1. XFD BARB INSERT TEE/EL RAIN BIRD: "XFF-TEE", -OR- "XFF-ELBOW".
2. RAIN BIRD RATCHET CLAMP.
3. RAIN BIRD BLANK TUBING.
4. RAIN BIRD #XFPVCADP (INSERT ADAPTER FOR 1" PVC). INCLUDES, DRIPLINE INSERT FITG 10mmX15mm, W/10mm GROMMET & CLAMP.
5. PVC SCH 40 DRIPLINE SUPPLY MANIFOLD, 1" SCH40 PVC PIPE.
6. RAIN BIRD HOLD DOWN STAKE #LD16STK

NOTE: SEE RAIN BIRD CATALOG FOR CORRECT MODEL #'S TO MATCH THE ID/OD SIZE OF INLINE DRIP TUBING TO FITTING'S, INSERT ADAPTER, GROMMET AND CLAMP.

16 RAIN BIRD "XFPVCADP" INSERT ADAPTER

N.T.S. 328413.05-01

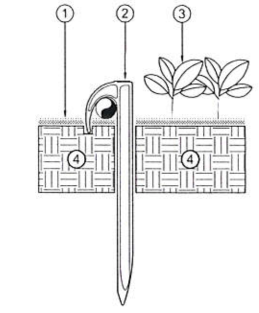

1. FINISH GRADE OR TOP OF MULCH
2. ASTA HOLD DOWN STAKE #43615.
3. PLANT MATERIAL (SHRUB OR GROUND COVER)
4. CLEAN SOIL, AMENDED/NATIVE - FREE OF ROCK AND DEBRIS

NOTE:
INSTALL HOLD DOWN STAKES ON INLINE DRIP EMITTER TUBING AT"
1. SAND EVERY 3' ON CENTER
2. LOAM EVERY 4' ON CENTER
3. CLAY EVERY 6' ON CENTER

THE IRRIGATION CONTRACTOR WILL INSTALL HOLD DOWN STAKES AS PER ABOVE SCHEDULE. IF STAKES ARE NOT INSTALLED CORRECTLY PAYMENTS WILL BE WITHHELD UNTIL THE DRIP TUBING IS STAKED CORRECTLY.

NOTE:
ASTA ® STAKE HOLD-DOWN, 7". FITS TUBING 1/2"-3/4" O D).

17 ANTELCO ASTA HOLD DOWN STAKE # 43615

N.T.S. 328415.21-01

SIDE VIEW

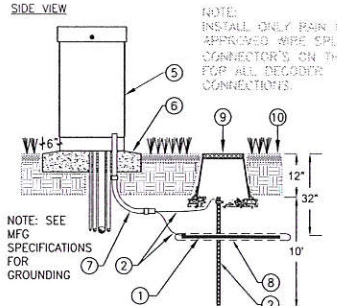

NOTE:
INSTALL ONLY RAIN BIRD APPROVED WIRE SPLICE CONNECTOR'S ON THIS PROJECT FOR ALL DECODER CONNECTIONS.

NOTE: SEE MFG SPECIFICATIONS FOR GROUNDING

INSTALL EARTH CONTACT MATERIAL, 2 BAGS OF "POWER SET" IN COURSE, ROCKY SOILS - OR 2 BAGS OF "POWER FILL" IN ALL OTHER SOILS PER EACH GROUND PLATE. THIS MATERIAL IS AVAILABLE FROM PAIGE ELECTRIC AND WILL BE INSTALLED TO ENSURE GROUNDING IS CORRECTLY INSTALLED.

ALL WIRE CONNECTION WILL CADWELDED TO GROUNDING RODS. GROUND PLATES WILL COME WITH #6 BARE COPPER WIRE ATTACHED.

TOP VIEW

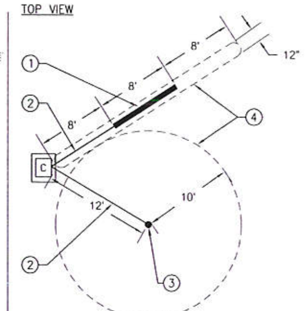

1. COPPER GROUND PLATE 4"x96"X0.0625"
2. #6 AWG SOLID BARE COPPER WIRE.
3. GROUND ROD ⅝"x10' COPPER CLAD, CADWELD.
4. ELECTRODE SPHERE OF INFLUENCE BOUNDARIES.
5. IRRIGATION CONTROLLER.
6. CONCRETE PAD 6" DEEP WITH 6" OVERLAP AROUND PEDESTAL.
7. PVC LONG SWEEP ELBOW, 1 ½" OR LARGER.
8. EARTH CONTACT MATERIAL FROM PAIGE ELECTRIC.
9. VALVE BOX WITH COVER: 10-INCH ROUND SIZE.
10. FINISHED GRADE.

NOTES:
SOIL WILL BE FREE OF ROCK AND ALL OTHER DEBRIS.
GROUNDING WILL BE TO 10 OHMS OR LESS.
INSTALL #6 BARE COPPER WIRE 12" MIN BELOW GROUND.

THIS GROUNDING DETAIL IS PROVIDED AND TO BE USED ONLY IF THE EXISTING HUNTER CONTROLLER IS REMOVED AND REPLACED WITH A NEW CONTROLLER.

09 GROUNDING DETAIL UP TO 64 STATIONS - 16 STATION CONTROLLER FOR NON ROCKY SOILS

N.T.S. 328480.82-01

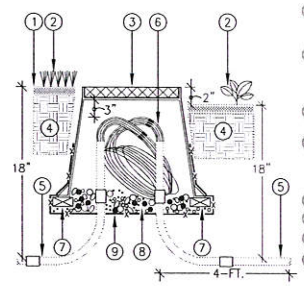

1. FINISH GRADE OR TOP OF MULCH
2. PLANT MATERIAL (TURF, SHRUB OR GROUND COVER)
3. VALVE BOX, 12" STANDARD. COVER, HEAT STAMPED "J.B." RAINBIRD VB-STD WITH HEX BOLT.
4. SOIL NATIVE/AMENDED - FREE OF ROCK & DEBRIS.
5. PVC ELECTRICAL SLEEVE 2" (MIN), GRAY CONDUIT, SCH 40 PVC, WITH "LONG SWEEP ELBOW'S.
6. 36" (MIN) WIRE LOOP.
7. BRICK SUPPORTS 1 OF 4
8. 3/4" CRUSHED ROCK
9. 1/2" WIRE CLOTH GOPHER SCREEN, WRAP UP ALL SIDES.

NOTES:
INSTALL CONTINUOUS WIRE RUN BETWEEN CONTROLLER & VALVE. INSTALL WIRE SPLICES ONLY IN VALVE BOX, MARK LOCATION ON AS-BUILT PLAN. INSTALL PULL BOX ON BOTH SIDES OF ALL ROAD CROSSING'S WITH PULL ROPE IN SLEEVE FOR FUTURE. INSTALL 90° LONG SWEEP ELBOWS, SLEEVE THE 2-WIRE PATH IN BOTH DIRECTIONS OF VALVE BOX. INSTALL ONLY GEL FILLED WIRE RAIN PRO DBC-BR SPLICES. INSTALL ONLY SCH40 GRAY PVC CONDUIT FOR SLEEVING ELECTRICAL WIRE FOR 2-WIRE PATH.

10 PULL BOX

N.T.S. 328477-14

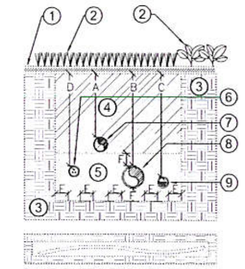

SNAKE PLASTIC PIPE INTO TRENCHES. SEE MANUFACTURERS SPECIFICATIONS.

1. FINISHED GRADE OR TOP OF MULCH.
2. PLANT MATERIAL (TURF, SHRUB OR GROUND COVER).
3. NATIVE CLEAN SOIL, FREE OF ROCK AND DEBRIS.
4. CLEAN COMPACTED BACKFILL FREE OF ROCK AND DEBRIS.
5. WASHED CONCRETE SAND FREE OF ROCK AND DEBRIS.
6. 120 VOLT ELECTRICAL WIRE IN PVC SCH 40 CONDUIT (GRAY).
7. LATERAL, PVC NON-PRESSURE PIPE, IN SCH 40 PVC SLEEVE.
8. MAINLINE, PVC PRESSURE PIPE, IN SCH 40 PVC SLEEVE.
9. CONTROL WIRES, IN SCH 40 PVC CONDUIT (GRAY).

DIMENSION	A	B	C	D	E	F
1/2" TO 1 1/2" SIZE	12"	18"	18"	30"	4"	6"
2" TO 2 2 1/2" IN SIZE	12"	24"	24"	30"	4"	6"
3" TO 4" AND LARGER	18"	24"	24"	30"	6"	6"

11 GENERAL TRENCHING

N.T.S. 328477-31

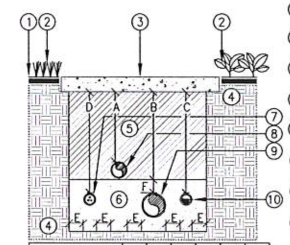

DIMENSION	A	B	C	D	E	F
BELOW GRADE	24"	36"	36"	30"	4"	6"

1. FINISH GRADE OR TOP OF MULCH
2. PLANT MATERIAL (TURF, SHRUB OR GROUND COVER)
3. CONCRETE, ASPHALT OR D.G. PAVED SURFACE
4. NATIVE CLEAN SOIL, FREE OF ROCK AND DEBRIS
5. CLEAN COMPACTED BACKFILL FREE OF ROCK AND DEBRIS
6. WASHED CONCRETE SAND FREE OF ROCK AND DEBRIS
7. 120 VOLT ELECTRICAL WIRE IN PVC SCH 40 CONDUIT (GRAY)
8. LATERAL, PVC NON-PRESSURE PIPE, IN SCH 40 PVC SLEEVE
9. MAINLINE, PVC PRESSURE PIPE, IN SCH 40 PVC SLEEVE
10. CONTROL WIRES, IN SCH 40 PVC CONDUIT (GRAY)

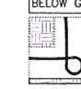

TIE A 36" LOOP IN ALL WIRING AT CHANGES OF DIRECTION GREATER THAN 30 DEGREES, UNTIE AFTER ALL DIRECTION CHANGES HAVE BEEN MADE.

BUNDLE WIRING AND WRAP WITH ELECTRICAL TAPE AT TEN FOOT INTERVALS. SLEEVE ALL MAINLINE, LATERAL LINES AND CONTROL WIRES BELOW ALL HARDSCAPE PAVEMENT IN SCH40 PVC, 2 DIAMETERS LARGER THEN THE ITEM BEING SLEEVED. ONE ITEM IS LIMITED PER SLEEVE.

© COPYRIGHT 2008 CURTIS ENTERPRISE. - THE PICTORIAL AND GRAPHIC EXPRESSIONS DISPLAYED WITH THIS ARE COPYRIGHTED UNDER THE LAWS OF THE UNITED STATES AND SHALL BE USED ONLY ON PROJECTS UNDER THE JURISDICTION OF THE AGENCY LISTED

328477-32

12 SLEEVE UNDER PAVEMENT

N.T.S. 328477-32

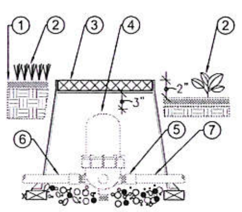

1. FINISH GRADE OR TOP OF MULCH.
2. PLANT MATERIAL (TURF, SHRUB OR GROUND COVER).
3. VALVE BOX, RAINBIRD-JUMBO.
4. NETAFIM 2" DUAL FILTER #25A30-120 MESH
5. COUPLING, PVC SCH40 (FIPTxSLIP) 2 REQUIRED.
6. MAINLINE, PVC SCH 40 FROM PUMP.
7. MAINLINE, PVC SCH 40 TO ZONE VALVES.

NOTES:
INSTALL FILTER FOR DISASSEMBLY & MAINTENANCE ACCESS.

INSTALL FILTER DOWN STREAM OF PUMP AND UPSTREAM FOR ALL REMOTE CONTROL VALVES SEE PLAN.

NOTES:
INSTALL NETAFIM 1 ½" DUAL FILTER FOR 35 GPM AND UNDER. (WITH 120 MESH)

NOTES:
INSTALL 45 DEGREE ELBOWS TO ACHIEVE CORRECT DEPTH. USE A NON- HARDENING TEFLON PIPE SEALANT ALL THREADED CONNECTIONS. INSTALL VALVE BOX (TURF FLUSH TO GRADE). (2" ABOVE GRADE SHRUB/G.C.)

05 NETAFIM 2" DUAL FILTER #25A30-120 MESH

N.T.S. 328414-09

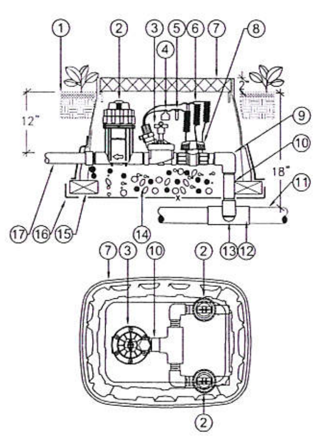

1. FINISH GRADE/TOP OF MULCH
2. PRESSURE REGULATING QUICK CHECK BASKET FILTER: RAIN BIRD PRB-QKCHK-100 (INCLUDED IN XCZ-PRB-150-COM KIT)
3. REMOTE CONTROL VALVE: RAIN BIRD PESB (INCLUCED IN XCZ-PRB-150-COM KIT)
4. ID TAG: TCHRISTY'S NUMBERED TAGS SERIES.
5. WATERPROOF WIRE SPLICE, RAINBIRD# SPLICE-1 (1 OF 2).
6. WIRE, COILED, 30-INCH LINEAR LENGTH.
7. JUMBO VALVE BOX WITH PURPLE COVER: RAIN BIRD #VB-JMB
8. 1 1/2-INCH BALL VALVE (PLASTIC).
9. ELBOW, PVC SCH40, FIPTxFIPT, SIZE PER VALVE INLET/OUTLET.
10. NIPPLE PVC SCH80 THREAD BOTH ENDS, SIZE PER VALVE INLET (3 REQUIRED), LENGTH AS NEEDED.
11. PRESSURE MAINLINE, PVC, SEE LEGEND FOR TYPE AND PLAN FOR SIZE.
12. TEE/EL PVC SCH 40, (SLIPxSLIPxFIPT) SIZE PER PLAN & VALVE INLET.
13. STREET ELBOW, PVC SCH40, MIPTxFIPT, SIZE PER VALVE INLET.
14. 3/4" CRUSHED ROCK, 1 CU-FT MIN.
15. BRICK (1 OF 4).
16. FILTER FABRIC, WRAP UP ALL SIDES.
17. LATERAL LINE, PVC - SEE PLAN FOR SIZE.
18. PVC SCH 40 TEE (INCLUDED IN XCZ-PRB-150-COM KIT)

06 RAIN BIRD XCZ-PRB-150-COM 1.5" COMMERCIAL VALVE

N.T.S. 328413.76-43

HIT

DBC-BR WIRE CONNECTOR INSTALLATION INSTRUCTIONS
WARNING! TURN OFF POWER BEFORE INSTALLING OR REMOVING CONNECTOR.
ALL ELECTRICAL WORK SHOULD BE DONE ACCORDING TO APPROPRIATE ELECTRICAL CODES.

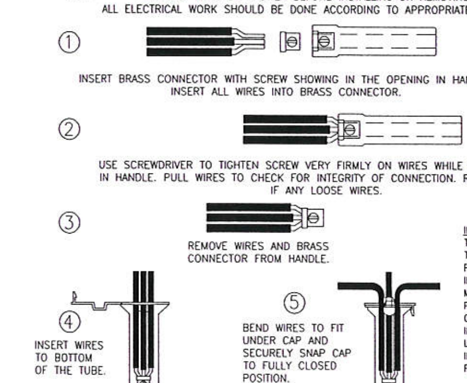

1. INSERT BRASS CONNECTOR WITH SCREW SHOWING IN THE OPENING IN HANDLE. INSERT ALL WIRES INTO BRASS CONNECTOR.
2. USE SCREWDRIVER TO TIGHTEN SCREW VERY FIRMLY ON WIRES WHILE HOLDING SPLICE IN HANDLE. PULL WIRES TO CHECK FOR INTEGRITY OF CONNECTION. REPEAT PROCESS IF ANY LOOSE WIRES.
3. REMOVE WIRES AND BRASS CONNECTOR FROM HANDLE.
4. INSERT WIRES TO BOTTOM OF THE TUBE.
5. BEND WIRES TO FIT UNDER CAP AND SECURELY SNAP CAP TO FULLY CLOSED POSITION.

IMPORTANT NOTICE: BEFORE UTILIZING THE PRODUCT, THE USER SHOULD DETERMINE THE SUITABILITY OF THE PRODUCT FOR ITS INTENDED USE. HIT PRODUCTS CORP. EXPRESSLY DISCLAIMS THE IMPLIED WARRANTIES AND CONDITIONS OF MERCHANTABLE AND FITNESS FOR A PARTICULAR PURPOSE. IN NO CASE SHALL HIT PRODUCTS CORP. BE LIABLE UNDER ANY LEGAL THEORY, INCLUDING BUT NOT LIMITED TO CONTACT OR STRICT LIABILITY, FOR ANY DIRECT, INDIRECT, SPECIAL, INCIDENTAL OR CONSEQUENTIAL DAMAGES RESULTING FROM PRODUCT USE.

MANUFACTURED BY HIT PRODUCTS CORP., LINDSAY, CA USA www.hitproductscorp.com

07 WIRE SPLICE CONNECTOR RAIN PRO (#DBC-BR)

N.T.S. 328410.18-02

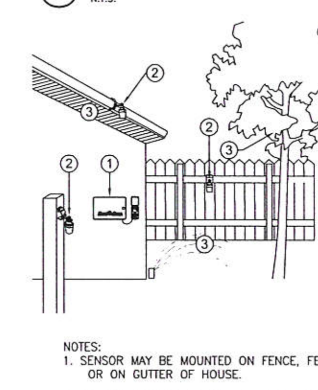

1. RAIN BIRD CONTROLLER WITH WR2 CONTROLLER INTERFACE, RAIN/FREEZE MODEL.
2. RAIN BIRD WR2 SENSOR RECOMMENDED MOUNTING SITE.
3. SITES NOT RECOMMENDED FOR MOUNTING WR2 SENSOR.

NOTES:
1. SENSOR MAY BE MOUNTED ON FENCE, FENCE POST OR ON GUTTER OF HOUSE.
2. SENSOR SHOULD NOT BE MOUNTED UNDER TREES, IN AREAS AFFECTED BY SPRINKLER SYSTEM OR UNDER EAVE OF HOUSE.

08 WR-2 SERIES WIRELESS RAIN SENSOR

N.T.S. 328411-38

NOZZLE: FIXED OR ADJ ARC

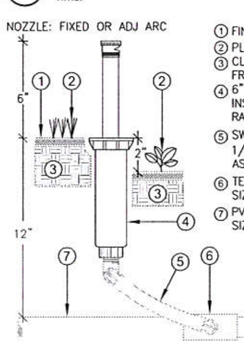

1. FINISHED GRADE.
2. PLANT MATERIAL.
3. CLEAN SOIL, AMENDED/NATIVE, FREE OF ROCK AND DEBRIS.
4. 6" POP-UP SPRAY SPRINKLER BODY, INSTALL IN TURF OR SHRUB AREAS. RAIN-PRO 906-CKV-30 PRD-NP.
5. SWING JOINT: RAIN-PRO, SJA2-1205, 1/2"x12" LAY ARM, FACTORY ASSEMBLED.
6. TEE/EL, PVC SCH40 LINE SIZE, SIZE PER SPRINKLER INLET.
7. PVC LATERAL (NON-PRESSURE PIPE). SIZE PER PLAN.

NOTE INSTALL WITH:
a. CKV CHECK VALVE
b. 30 PSI PRD
c. PURPLE CAP (NP)

INSTALL POPUP SPRINKLERS:
1. PLUMB AND FLUSH TO GRADE IN TURF AND 2" ABOVE GRADE FOR SHRUB/GROUND COVER BEDS. INSTALL 4" FROM PAVED EDGE, BUILDINGS & FENCE AREAS, ADJUST COVERAGE TO AVOID OVERSPRAY ONTO PAVED SURFACES, FENCES, BUILDINGS AND PARKING LOTS.
2. INSTALL WITH TEFLON SEALANT ON THREADED CONNECTIONS.

01 6" POP-UP SPRINKLER RAIN-PRO 906-CKV-30 PRD-NP

N.T.S. 328403.15-170

RAIN PRO REMOTE CONTROL ZONE SIZE RANGE: 1", 1 1/2" 2" & 3"

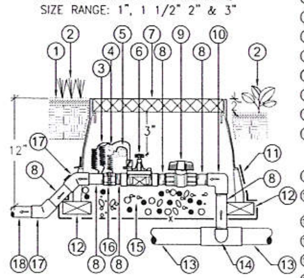

1. FINISHED GRADE
2. PLANT MATERIAL, TURF, SHRUB OR GROUND COVER.
3. WIRE, COILED, 30-INCH LINEAR LENGTH.
4. WATERPROOF WIRE SPLICE, RAIN PRO #DBC-BR (1 OF 2).
5. ID TAG:
6. REMOTE CONTROL VALVE RAIN PRO #500-R SERIES.
7. VALVE BOX, PURPLE COVER, HEAT STAMP WITH R.C.V.
8. NIPPLE PVC SCH80, (BLANK BOTH ENDS), (THREAD BOTH ENDS) OR (THREAD ONE END), SIZE PER VALVE INLET/OUTLET, LENGTH AS NEEDED.
9. BALL VALVE BVT, RAIN PRO, SIZE PER RCV INLET.
10. ELBOW, PVC SCH80, 90°, FIPTxFIPT, SIZE PER VALVE INLET/OUTLET.
11. FILTER FABRIC, WRAP UP ALL SIDES.
12. BRICK (1 OF 4).
13. MAINLINE, SIZE PER PLAN, SEE LEGEND FOR TYPE.
14. TEE/EL, (SLIPxSLIPxFIPT) WITH STREET EL, (MIPTxFIPT), SCH80 PVC, SIZE PER PLAN & VALVE INLET SIZE.
15. CRUSHED ROCK 3/4", 1 CU-FT MIN.
16. UNION, (FIPT) SCH80 PVC, SIZE PER VALVE INLET/OUTLET.
17. ELBOW 45°, SCH80 PVC, (SLIPxSLIP), SIZE PER VALVE OUTLET, (2) REQUIRED.
18. LATERAL PIPE PVC, SIZE PER PLAN, SEE LEGEND FOR TYPE.

NOTES:
INSTALL 45° ELBOWS TO ACHIEVE CORRECT DEPTH.

FOR THREADED CONNECTIONS INSTALL ONLY NON-HARDENING TEFLON PIPE SEALANT.

INSTALL VALVE BOX, FLUSH TO GRADE IN TURF AND 2" ABOVE GRADE IN SHRUB & GROUND COVER AREAS.

WIPE OFF ALL EXCESS PVC CEMENT FROM PIPE.

NOTE INSTALL VALVE WITH:
1) N.P. PURPLE BONNET

02 REMOTE CONTROL VALVE, RAIN PRO, 500-R SERIES

N.T.S. CONTROL VALVE WITH RAIN PRO BALL VALVE, UNION-SCH80 PVC, & PURPLE RECLAIMED BONNET 328406.50-084

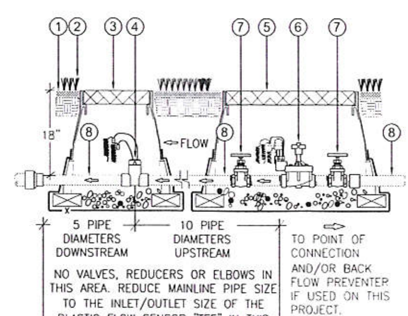

1. FINISH GRADE OR TOP OF MULCH
2. PLANT MATERIAL (TURF, SHRUB OR GROUND COVER).
3. VALVE BOX, COVER (PURPLE) - HEAT BRANDED "F.S." W/SS BOLT NUT & WASHER, 12" STANDARD VALVE BOX.
4. FLOW SENSOR MOUNTED IN SCH80 TEE OR SADDLE. LINE SIZE UNLESS OTHERWISE INDICATED. SEE MATERIAL SCHEDULE FOR BRAND SPECIFIED.
5. VALVE BOX, COVER - HEAT BRANDED "M.V." W/SS BOLT NUT & WASHER, JUMBO VALVE BOX, SEE MATERIAL SCHEDULE FOR LID COLOR, I.E., GREEN OR PURPLE.
6. MASTER VALVE SEE MATERIAL SCHEDULE.
7. GATE VALVE SEE MATERIAL SCHEDULE.
8. PVC MAINLINE OR SCH80 NIPPLES, SIZE PER VALVE INLET/OUTLET.

NOTES:
MASTER VALVE WILL BE INSTALLED DOWN STREAM OF THE BACK-FLOW PREVENTOR.

THIS IS NOT THE MASTER VALVE DETAIL. THIS DETAIL SHOWS THE DISTANCE THE PIPE MUST BE UNOBSTRUCTED BETWEEN THE DOWNSTREAM SIDE OF MASTER VALVE AND UPSTREAM SIDE OF THE FLOW SENSOR. SEE MASTER VALVE & FLOW SENSOR DETAILS FOR MORE INSTALLATION INFORMATION

03 MASTER VALVE & FLOW SENSOR INSTALLATION DETAIL

N.T.S. 328409.63-15

RAIN PRO MASTER VALVE SIZE RANGE: 1", 1 1/2" 2" & 3"

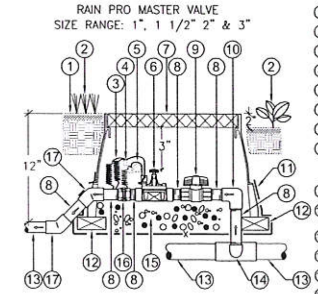

1. FINISHED GRADE
2. PLANT MATERIAL, TURF, SHRUB OR GROUND COVER.
3. WIRE, COILED, 30-INCH LINEAR LENGTH.
4. WATERPROOF WIRE SPLICE, RAIN PRO #DBC-BR (1 OF 2).
5. ID TAG:
6. MASTER VALVE RAIN PRO #500-R SERIES.
7. VALVE BOX, PURPLE COVER, HEAT STAMP WITH M.C.V.
8. NIPPLE PVC SCH80, (BLANK BOTH ENDS), (THREAD BOTH ENDS) OR (THREAD ONE END), SIZE PER VALVE INLET/OUTLET, LENGTH AS NEEDED.
9. BALL VALVE BVT, RAIN PRO, SIZE PER RCV INLET.
10. ELBOW, PVC SCH80, 90°, FIPTxFIPT, SIZE PER VALVE INLET/OUTLET.
11. FILTER FABRIC, WRAP UP ALL SIDES.
12. BRICK (1 OF 4).
13. MAINLINE, SIZE PER PLAN, SEE LEGEND FOR TYPE.
14. TEE/EL, (SLIPxSLIPxFIPT) WITH STREET EL, (MIPTxFIPT), SCH80 PVC, SIZE PER PLAN & VALVE INLET SIZE.
15. CRUSHED ROCK 3/4", 1 CU-FT MIN.
16. UNION, (FIPT) SCH80 PVC, SIZE PER VALVE INLET/OUTLET.
17. ELBOW 45°, SCH80 PVC, (SLIPxSLIP), SIZE PER VALVE OUTLET, (2) REQUIRED.

NOTES:
INSTALL 45° ELBOWS TO ACHIEVE CORRECT DEPTH.

FOR THREADED CONNECTIONS INSTALL ONLY NON-HARDENING TEFLON PIPE SEALANT.

INSTALL VALVE BOX, FLUSH TO GRADE IN TURF AND 2" ABOVE GRADE IN SHRUB & GROUND COVER AREAS.

WIPE OFF ALL EXCESS PVC CEMENT FROM PIPE.

NOTE INSTALL VALVE WITH:
1) N.P. PURPLE BONNET

04 MASTER VALVE, RAIN PRO, 500-R SERIES

N.T.S. CONTROL VALVE WITH RAIN PRO BALL VALVE, UNION-SCH80 PVC, & PURPLE RECLAIMED BONNET 328406.50-150

1925 Prospect Ave.
Orlando, FL 32814
P (407) 661-9100
F (407) 661-9101
www.c-p.com

Cuhaci & Peterson
Architects Engineers Planners
ORLANDO • PHILADELPHIA

CLIENT NAME
SRK Lady Lake 43 Associates, L.L.C.
4053 Maple Road
Amherst, NY 14226-1072

SPRINKLER CONSULTANT
ASIC
WILLIAM B. CURTIS
Phone: (407) 830-7041
sprinkler-consultant@earthlink.net

PROJECT NAME
Lady Lake Crossing East
@ SR 500 & US 27
Lady Lake, FL
Grey Shelll Building

SHEET TITLE
IRRIGATION DETAILS

RELEASE

PROJECT NO 2130712
DATE 1/12/15
DRAWN
CHECKED

IRR-4

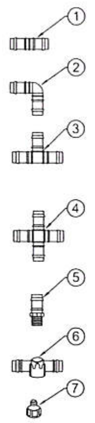

	DESCRIPTION:	MODEL #
①	XFF COUPLING 17 x 17 MM	XFF-COUP
②	XFF ELBOW BARBED 17 x 17 MM	XFF-ELBOW
③	XFF TEE BARB TEE 17 X 17 X 17MM	XFF-TEE
④	XFF CROSS 17MM X 17MM X 17MM X 17MM	XFD-CROSS
⑤	XFF MALE BARB ADAPTER 17MM X Y 2" MPT	XFF-MA-050
⑥	XXF BARB TEE FEMALE ADAPTER 17 MM	XFD-TFA-075
⑦	XFF BARB TEE FEMALE ADAPTER	XFD-FA-075

NOTES: RAIN BIRD XFF INSERT FITTINGS
THE CONTRACTOR WILL INSTALL RAIN BIRD "XFF" INSERT FITTINGS FOR THE INLINE DRIP TUBING AS NEEDED.

24 RAIN BIRD XF™ SERIES 17MM INSERT FITTINGS
N.T.S. 328413.85-15

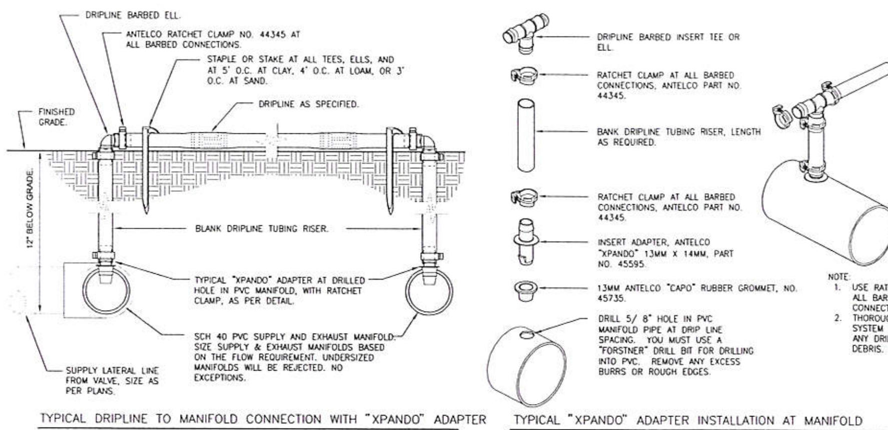

TYPICAL DRIPLINE TO MANIFOLD CONNECTION WITH "XPANDO" ADAPTER

TYPICAL "XPANDO" ADAPTER INSTALLATION AT MANIFOLD

25 DRIPLINE TO MANIFOLD "XPANDO" ADAPTER CONNECTION
N.T.S. 328413.56-50

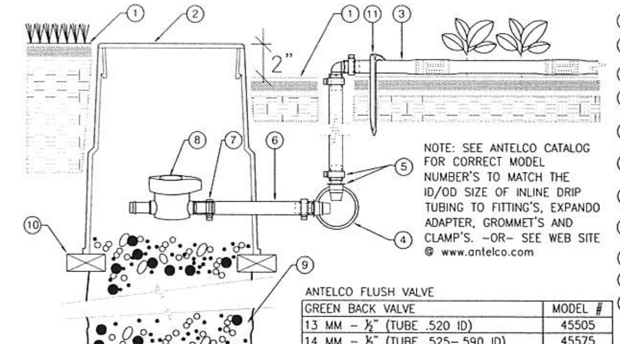

NOTE:
FLUSH VALVES MAY NOT BE SHOWN ON PLAN. INSTALL A FLUSH VALVE AT THE END OF ALL PLANTER BEDS.

ANTELCO FLUSH VALVE

GREEN BACK VALVE	MODEL #
13 MM - ½" (TUBE .520 ID)	45505
14 MM - ½" (TUBE .525-.590 ID)	45575
15 MM - ½" (TUBE .580-.590 ID)	45555
16 MM - ⅝" (TUBE .570-.620 ID)	45515
18 MM - (TUBE .660-.720 ID)	45565
20 MM - ¾" (TUBE .810-.820 ID)	45535
25 MM - 1" (TUBE 1.050 ID)	45545

1. FINISH GRADE OR TOP OF MULCH
2. VALVE BOX, 6" ROUND. WITH PURPLE COVER. RAIN PRO PART # VB-6R (FOR FLUSH VALVE).
3. INLINE DRIP TUBING, SEE PLAN FOR TYPE.
4. SCH 40 PVC FLUSH MANIFOLD, SEE DRIP LINE DETAIL.
5. ANTELCO "XPANDO ADAPTER, CAPO GROMMET AND RATCHET CLAMP ASSEMBLY. SIZE PER PLAN.
6. BANK DRIPLINE TUBING, CONNECTS TO FLUSH VALVE, LENGTH AS REQUIRED. SIZE PER PLAN.
7. RATCHET CLAMP AT ALL BARBED CONNECTIONS, ANTELCO. SIZE PER DRIPLINE SEE PLAN.
8. ANTELCO PURPLE BACK VALVE, SEE CHART. FOR RECLAIMED WATER.
9. 3/4" WASHED GRAVEL, SUMP (1 CUBIC FOOT).
10. BRICK SUPPORTS: 1 OF 4.
11. ANTELCO ASTA HOLD DOWN STAKE #43615.

ANTELCO FLUSH VALVE, NON-POTABLE WATER

PURPLE BACK VALVE	MODEL #
13 MM - ½" (TUBE .520 ID)	46505
16 MM - ⅝" (TUBE .570-.620 ID)	46515
20 MM - ¾" (TUBE .810-.820 ID)	46535
25 MM - 1" (TUBE 1.050 ID)	46545

26 ANTELCO - FLUSH VALVE FOR INLINE DRIP TUBING
N.T.S. 328413.05-08

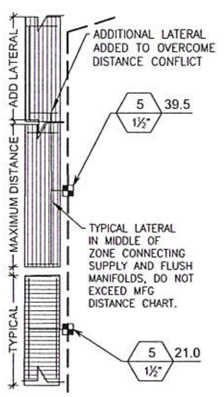

DRIP ZONE NOTES:

DRIP ZONE VALVES ARE PLACED IN THE MIDDLE OF A PLANTER BED, SPACED NOT TO EXCEED THE RECOMMENDED DISTANCE TO RUN INLINE DRIP TUBING. THE CONTRACTOR WILL MANIFOLD PLANTER BEDS AND INSTALL DRIP TUBING RUNNING IN BOTH DIRECTIONS AND WILL VERIFY THE MANIFOLD HEADER IS LARGE ENOUGH TO FLOW THE VOLUME REQUIRED.

IN THE EVENT THE DRIPLINE LENGTH EXCEEDS MFG SPECIFICATION AN ADDITIONAL LATERAL LINE MUST BE INSTALLED TO THAT AREA TO PREVENT A DISTANCE CONFLICT. (SEE TOP EXAMPLE)

DRIP TUBING HATCH SHOWN ON PLANS ONLY INDICATES THIS AREA WILL RECEIVE INLINE EMITTER DRIP TUBING. THE HATCH PATTERN SHOWN DOES NOT REPRESENT THE ACTUAL SPACING FOR THE INLINE DRIP EMITTER TUBING.

20 DISTANCE SPACING OF LATERAL PIPE
N.T.S. 328413.05-04

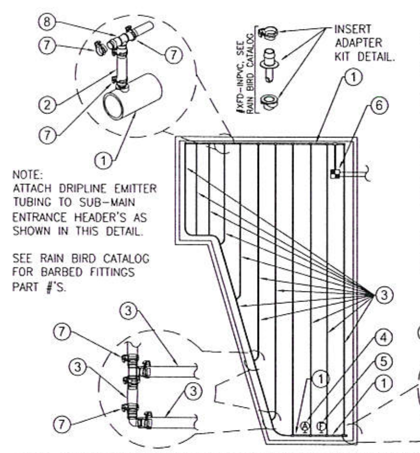

1. PVC SCH40 SUB-MAIN (HEADER PIPE) FOR DRIPLINE, MINIMUM SIZE 1".
2. CONNECTOR 'BLANK TUBING' FROM HEADER TO DRIPLINE TUBING.
3. TYPICAL LANDSCAPE DRIPLINE TUBING: RAIN BIRD XF-SDI, SEE LEGEND FOR TYPE AND EMITTER SPACING.
4. AIR/VACCUM RELEASE VALVE.
5. FLUSH VALVE.
6. REMOTE CONTROL ZONE - (LOW VOLUME DRIP ZONE), SEE GENERAL LEGEND FOR SIZE AND TYPE.
7. INSTALL CLAMP ON ALL BARBED FITTINGS.
8. XF DRIPLINE INSERT FITTINGS SEE RAIN BIRD CATALOG.

NOTE:
SUB-MAIN -OR- HEADER PIPE WILL BE A MINIMUM OF 12" BELOW GRADE.

INSTALL RATCHET CLAMP ON ALL SIDES OF ALL INSERT FITTING'S.

ATTACH FLUSH VALVE TO EXIT HEADER & AIR RELIEF VALVE AT HIGH POINT.

21 DRIPLINE TUBING FOR SHRUBS AND GROUND COVER AREA'S
N.T.S. 328413.85-05

IN-LINE DRIP EMITTER TUBING DISTANCE SCHEDULE

MAXIMUM LATERAL LENGTH (FEET) — EMITTER FLOW RATE GPH

PSI	12" SPACING 0.60	12" SPACING 0.90	18" SPACING 0.60	18" SPACING 0.90	24" SPACING 0.60	24" SPACING 0.90
10	273	155	314	250	424	322
20	318	169	353	294	508	368
30	360	230	413	350	586	414
40	395	255	465	402	652	474
50	417	285	528	420	720	488
60	460	290	596	455	780	514

NOTE:
DO NOT EXCEED THE MFG RECOMMENDED LENGTH OF RUN FOR INLINE DRIP EMITTER TUBING. IF THE MAXIMUM RECOMMENDED LENGTH IS EXCEEDED THE DROP IN PRESSURE WILL CAUSE THE DRIPLINE NOT TO WORK CORRECTLY.

GRID PRECIPITATION RATES (IN/HR)

EMITTER SPACING	LATERAL SPACING	EMITTER FLOW RATE 0.6	EMITTER FLOW RATE 0.9
12	12	0.96	1.44
18	18	0.69	1.03
24	24	0.28	0.41

XFD On-Surface Drip Line Flow (per 100' Tubing)

EMITTER SPACING	0.60 gph EMITTER		0.90 gph EMITTER	
12"	61.0 gph	1.01 gpm	92.0 gph	1.53 gpm
18"	41.0 gph	0.68 gpm	61.0 gph	1.02 gpm
24"	31.0 gph	0.51 gpm	46.0 gph	0.77 gpm

MAXIMUM FLOW PER ZONE

	MAX GPM	PSI LOSS
SCHEDULE 40 PVC HEADER SIZE		
1/2"	4.7 GPM	7.7 PSI
3/4"	8.3 GPM	5.6 PSI
1"	13.5 GPM	4.2 PSI
1-1/2"	33.9 GPM	2.9 PSI
2"	52.4 GPM	1.9 PSI
POLY PIPE HEADER SIZE		
1/2"	4.7 GPM	8.8 PSI
3/4"	8.3 GPM	6.3 PSI
1"	13.5 GPM	4.8 PSI
1-1/2"	31.8 GPM	2.9 PSI
2"	52.4 GPM	2.2 PSI

NOTE:
PRIOR TO INSTALLATION THE CONTRACTOR WILL VERIFY THE DISTANCES IN THESE CHARTS BY REVIEWING THE RAIN BIRD CATALOGUE TO ENSURE ACCURACY.

22 RAIN BIRD DRIPLINE TUBING LENGTH CHART
N.T.S. 328413.85-10

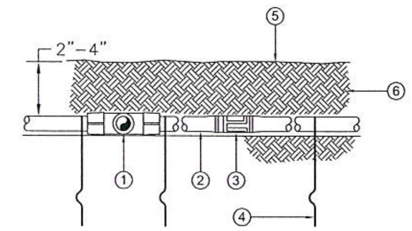

1. EASY FIT COMPRESSION TEE: RAIN BIRD MDCFTEE
2. SUB-SURFACE DRIPLINE: RAIN BIRD XFS SERIES DRIPLINE SEE MATERIAL SCHEDULE FOR EMITTER SPACING.
3. INLINE DRIP EMITTER OUTLET
4. TIE DOWN STAKE: ASTA HOLD DOWN STAKE #43615.
5. FINISHED GRADE.
6. SOIL, NATIVE OR AMENDED.

NOTES:
1. PLACE TIE DOWN STAKES EVERY THREE (3) FEET IN SAND, FOUR (4) FEET IN LOAM, AND FIVE (5) FEET IN CLAY.
2. AT FITTINGS WHERE THERE IS A CHANGE OF DIRECTION SUCH AS TEES OR ELBOWS, USE TIE-DOWN STAKES ON EACH LEG OF THE CHANGE OF DIRECTION.

23 RAIN BIRD XFS SUB-SURFACE DRIPLINE
N.T.S. 328413.85-12

TYPICAL RAINBIRD "XFS" DRIPLINE LAYOUT:
DRIPLINE EMITTER'S 12" ON CENTER,
ROW SPACING 12" ON CENTER.

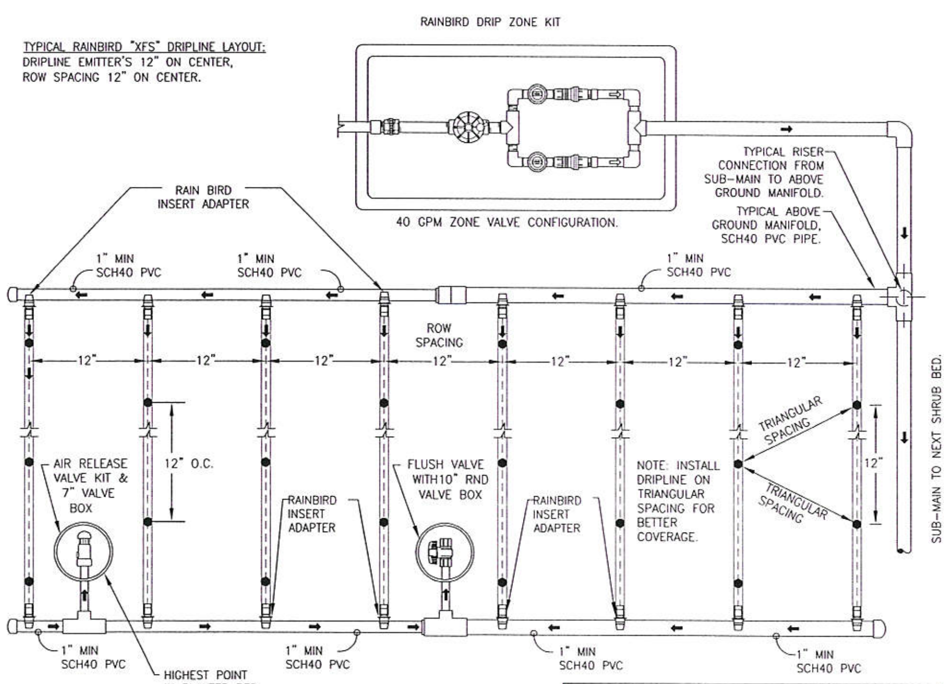

NOTES: OPTIONS FOR CONNECTING DRIPLINE TO SCH40 PVC HEADER MANIFOLD.

1. SEE THE RAIN BIRD CATALOGUE FOR THE DRILL BIT SIZE FOR DRILLING HOLES INTO 1", 1 1/2" & 2" MANIFOLD HEADER'S FOR THE INSERT ADAPTERS.
2. PVC MANIFOLD WILL BE A MINIMUM OF SCH40 1" AND MAXIMUM OF 2". DO NOT INSTALL BARB INSERT ADAPTER ON PVC PIPE LESS THAN 1" IN DIAMETER OR OVER 2" IN DIAMETER.
3. USE ONLY TEFLON TAPE OR SEALANT ON ALL THREADED CONNECTIONS. DO NOT USE PIPE DOPE!
4. DO NOT EXCEED 20 GPM ON 1" VALVE KIT ASSEMBLY AND 40 GPM PER 1 1/2" ZONE VALVE KIT ASSEMBLY.

MAX FLOW THRU SCH40 PIPE DIAMETER "DRIP MANIFOLD"

RISER DIAMETER SIZE	MAXIMUM FLOW	VELOCITY	PSI LOSS/100'
1/2"	1-3 GPM	4.50	6.55
3/4"	4-6 GPM	4.42	4.52
1"	7-10 GPM	4.62	3.69
1 1/2"	11-20 GPM	3.23	1.14
2"	21-40	4.46	1.68

SPECIAL NOTES: (PAY ATTENTION)
IF UNDERSIZED RISERS FROM THE SUPPLY LINE TO THE DRIP MANIFOLD - OR UNDERSIZED DRIP MANIFOLD'S ARE INSTALLED, THE OWNER WILL WITHHOLD ALL PAYMENTS UNTIL OR UNLESS THE CONTRACTOR REMOVES AND REPLACES THIS EQUIPMENT WITH THE CORRECT PARTS AT THE CONTRACTORS EXPENSE AND NO ADDITIONAL COTS TO OWNER. NO EXCEPTIONS WILL BE MADE.

18 RAINBIRD DRIPLINE - 12" O.C. - ROWS 12" O.C.
N.T.S. 328413.56-59

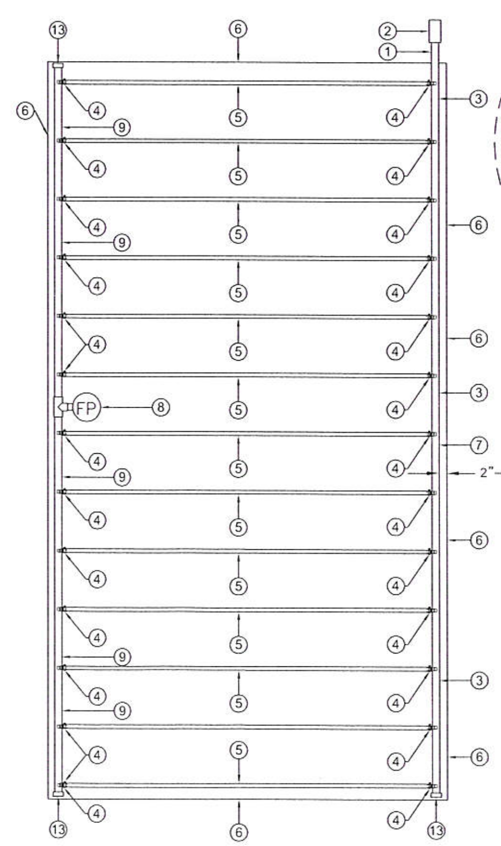

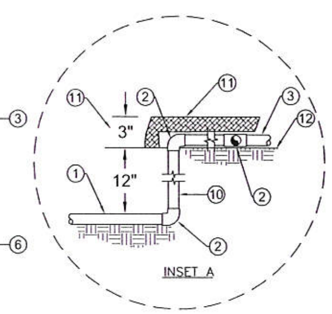

1. PVC SUPPLY PIPE FROM RAIN BIRD CONTROL ZONE KIT (SIZED TO MEET LATERAL FLOW DEMAND)
2. PVC SCH 40 TEE OR ELBOW (TYPICAL)
3. PVC SUPPLY MANIFOLD SCH40 PVC, EITHER 1 ½" OR 1" SEE PLAN FOR SIZE.
4. RAIN BIRD INSERT ADAPTER, FOR 1" MANIFOLD MODEL # IN-PVC AND FOR 1 1/2" & 2" MANIFOLD, MODEL # XFPVCADP, INCLUDES GROMMET AND RATCHET CLAMP.
5. ON-SURFACE DRIPLINE: RAIN BIRD XF SERIES DRIPLINE (TYPICAL) SEE MATERIAL SCHEDULE FOR GPM TYPE AND SPACING.
6. PERIMETER OF AREA
7. PERIMETER DRIPLINE PIPE TO BE INSTALLED 2"-4" FROM PERIMETER OF AREA
8. FLUSH POINT: SEE RAIN BIRD XFD DETAILS FOR FLUSH POINT INSTALLATION
9. PVC SCH40 FLUSH OR EXIT MANIFOLD
10. PVC SCH40 RISER PIPE
11. 2" - 3" DEPTH OF MULCH
12. FINISH GRADE
13. END CAP, PVC SCH40, SIZE PER MANIFOLD.

NOTES:
1. THE IRRIGATION CONTRACTOR IS RESPONSIBLE TO INSTALL A "RISER", ITEM 10", FOR EACH PLANTER BED, WHICH IS LARGE ENOUGH TO PROVIDE SUFFICIENT VOLUME OF WATER TO THE "SUPPLY MANIFOLD" TO IRRIGATE THE AREA.
2. LENGTH OF LONGEST DRIPLINE LATERAL WILL NOT EXCEED THE MAXIMUM SPACING SHOWN IN THE ACCOMPANYING TABLE, REVIEW THE RAIN BIRD DRIP SPECIFICATIONS. FOR SLOPES LESS THAN 3% (3' OF 100' / 0.9M OF 30.5M) DO NOT REQUIRE ANY SPECIAL DESIGN CONSIDERATION.
3. PLACE TIE DOWN STAKES EVERY THREE FEET IN SAND, FOUR FEET IN LOAM, AND SIX FEET IN CLAY. AT FITTINGS WHERE THERE IS A CHANGE OF DIRECTION SUCH AS TEES OR ELBOWS, INSTALL TIE-DOWN STAKES ON EACH LEG OF THE CHANGE OF DIRECTION AND SECURE PIPE WITH CLAMP.

ABOVE GROUND MANIFOLD SIZING FOR RAIN BIRD DRIPLINE:

GPM	SIZE OF MANIFOLD	TYPE OF PIPE	RAIN BIRD INSERT ADAPTER
0-16	1.0 INCH	PVC SCH 40	# IN-PVC
16-34	1.5 INCH	PVC SCH 40	# XFPVCADP
35+	2 INCH	PVC SCH 40	# XFPVCADP

XFD Dripline Maximum Lateral Lengths (Feet)

PSI	12" Spacing 0.6 GPH	12" Spacing 0.9 GPH	18" Spacing 0.6 GPH	18" Spacing 0.9 GPH	24" Spacing 0.6 GPH	24" Spacing 0.9 GPH
15	273	155	314	250	424	322
20	318	169	353	294	508	368
30	360	230	413	350	586	414
40	395	255	465	402	652	474
50	417	285	528	420	720	488
60	460	290	596	455	780	512

WHEN USING 17MM INSERT FITTINGS WITH DESIGN PRESSURE OVER 30PSI, THE IRRIGATION CONTRACTOR WILL INSTALL EITHER A STAINLESS STEEL CLAMP OR AN ANTELCO RATCHET CLAMP ON EACH FITTING.

19 RAIN BIRD XFD ON-SURFACE DRIPLINE
N.T.S. 328413.56-40

1925 Prospect Ave.
Orlando, FL 32814
P (407) 661-9100
F (407) 661-9101
www.c-p.com
Cuhaci & Peterson
Architects Engineers Planners
ORLANDO • PHILADELPHIA

CLIENT NAME
SRK Lady Lake 43 Associates, L.L.C.
4053 Maple Road
Amherst, NY 14226-1072

PROJECT NAME
Lady Lake Crossing East
@ SR 500 & US 27
Lady Lake, FL
Grey Shell Building

SHEET TITLE
IRRIGATION DETAILS

SPRINKLER CONSULTANT
ASIC
WILLIAM B. CURTIS
Phone: (407) 830-7041
sprinkler-consultant@earthlink.net

RELEASE

PROJECT NO 2130712
DATE 1/12/15
DRAWN
CHECKED

IRR-5

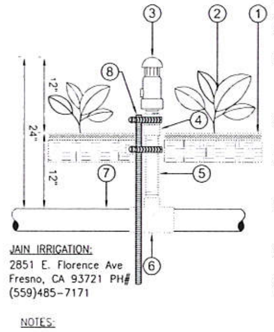

JAIN IRRIGATION:
2851 E. Florence Ave
Fresno, CA 93721 PH#
(559)485-7171

1. FINISH GRADE OR TOP OF MULCH.
2. PLANT MATERIAL (SHRUB OR GROUND COVER).
3. AIR/VACUUM RELIEF VALVE KIT: JAIN IRRIGATION A/R VALVE KIT, MODEL # VBK-3/4", PART # 12090033, 3/4" MPT.
4. COUPLING, SCH40 PVC, SIZE 3/4", (MIPTxMIPT).
5. RISER, SCH80 PVC, THREAD BOTH ENDS (MIPTxMIPT), 24" LENGTH MINIMUM.
6. TEE, SCH40 PVC, (SxSxFIPT), SIZE PER LATERAL LINE, 1/2" FIPT.
7. LATERAL LINE, SCH40 PVC, SIZE PER PLAN.
8. REBAR 5/8" ROD, MINIMUM 24" IN LENGTH WITH (2) TWO STAINLESS STEEL GEAR CLAMPS.

NOTES:

1. THE AIR/VACUUM RELIEF VALVE KIT WILL BE INSTALLED ABOVE GRADE AS SHOWN, AS THE AVR WILL FAIL IF INSTALLED BELOW GRADE.
2. THE HEIGHT ABOVE GRADE IS 12" TO 24" MAXIMUM, DEPENDING ON GROUND COVER OR SHRUB HEIGHT.

(28) AIR/VACUUM RELEASE VALVE
N.T.S. 328413.53-23

PEDESTAL
SIDE VIEW

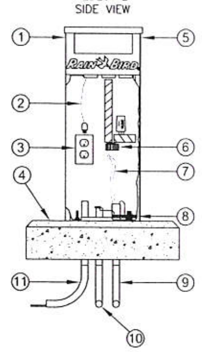

INCLUDE:
1) WIRELESS RAIN SENSOR.

1. RAIN BIRD POWDER COATED STEEL PEDESTAL DIMENSIONS: 13" x 13" x 33" HIGH.
2. 115 VAC "PIGTAIL" CABLE FIELD CONNECT TO POWER WIRES.
3. SURGE SUPRESSION OUTLET (110V).
4. MINIMUM 3,000 PSI CONCRETE BASE WITH VARIOUS CONDUIT PENETRATIONS AND SWEEP ELLS AS SHOWN. (2' X 2' X 6" SIZE)
5. ESP-LXME(F) CONTROLLER.
6. TERMINAL BLOCK FOR 2-WIRE PATH.
7. CONTROLLER WIRE PATH FOR ZONE VALVES.
8. GROUNDING BAR – CONTRACTOR TO INSTALL GROUNDING GRID AS REQUIRED. CONFIRM 10Ω OR LESS RESISTANCE TO GROUND. SEE GROUNDING DETAILS.
9. LONG SWEEP EL FOR WIRE PATH.
10. LONG SWEEP EL FOR GROUND WIRE.
11. LONG SWEEP EL FOR 115V POWER.

(29) RAIN BIRD ESP-LXMe, PEDESTAL MOUNT
N.S.F. 328410.03-27

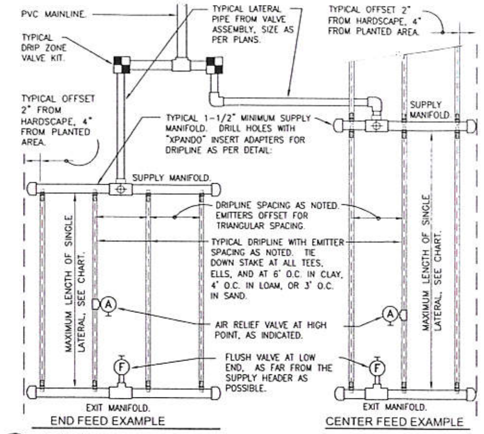

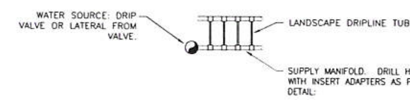

IRRIGATION CONTRACTOR WILL VERIFY THE MATERIAL SPECIFICATIONS FOR THE DRIPLINE GPH TO BE INSTALLED ON THIS PROJECT. UNLESS OTHERWISE NOTED INSTALL .9 GPH EMITTERS 12" ON CENTER AND 12" BETWEEN ROW SPACING.

CONTRACTOR WILL VERIFY DISTANCE AND PRECIPATION CHARTS WITH RAIN BIRD SPECIFICATION INFO.

(F) FLUSH VALVE: SEE MATERIAL LEGEND.

(A) AIR RELIEF VALVE: RAIN BIRD AR VALVE KIT, INSTALL AT HIGH POINT OF SYSTEM.

LENGTH OF LONGEST DRIPLINE LATERAL WILL NOT EXCEED THE MAXIMUM SPACING SHOWN IN THE RAIN BIRD CATALOGUE. THIS CHART IS AN EXAMPLE ONLY VERIFY WITH RAIN BIRD SPECIFICATIONS.

SLOPED CONDITION NOTE:
1. DRIPLINE LATERALS SHOULD FOLLOW THE CONTOURS OF THE SLOPE WHENEVER POSSIBLE.
2. INSTALL AIR RELIEF VALVE AT HIGHEST POINT.
3. NORMAL SPACING WITHIN THE TOP 2/3 OF SLOPE.
4. INSTALL DRIPLINE AT 25% GREATER SPACING AT BOTTOM 1/3 OF THE SLOPE.
5. WHEN ELEVATION CHANGE IS 10 FT OR MORE, ZONE THE BOTTOM 1/3 ON A SEPARATE VALVE.

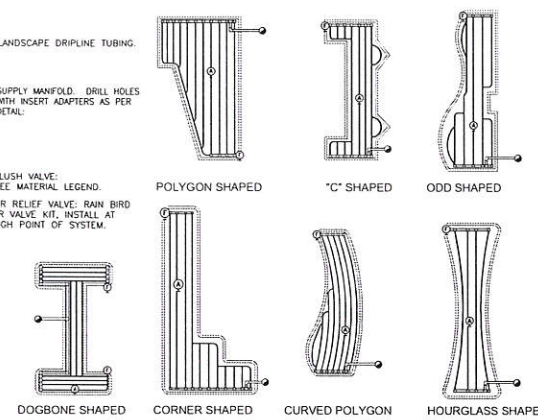

(30) RAIN BIRD DRIPLINE WITH INSERT ADAPTERS
N.T.S. 328413.05-06

EXAMPLES FOR DRIP ZONES. THE IRRIGATION CONTRACTOR WILL SELECT THE APPROPRIATE SIZE RISER AND DRIPLINE MANIFOLD - SEE CHART BELOW FOR CORRECT SIZING.

END FEED RISER (3 GPM MAX)

NOTES: TO INSTALL
1. 1/2" BLANK TUBING
2. MAX FLOW 3 GPM
3. SUPPLY LINE SIZE SEE PLAN
4. CLAMP ALL DRIPLINE AND BLANK TUBING FITTINGS
5. INSTALL RAIN BIRD INSERT ADAPTER KITS
   a. 1 1/2" XFD-INPVC
   b. 1" XFP-VCADP

NOTE:
DO NOT PUT MORE THAN 3 GPM ON INLINE DRIP EMITTER TUBING WITH 1/2" BLANK TUBING RISER FROM THE SUPPLY LINE! FAILURE TO COMPLY WITH THIS SPECIFICATION WILL GIVE THE OWNER "JUST CAUSE" TO IMMEDIATELY TERMINATE THE CONTRACT AND/OR WITHHOLD PROGRESS & FINAL PAYMENTS AS THIS WILL CAUSE THE DRIP SYSTEM TO FAIL!

END FEED RISER (10 GPM) DRIP MANIFOLD

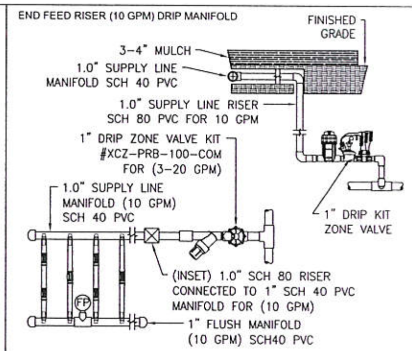

END FEED RISER (20 GPM) DRIP MANIFOLD

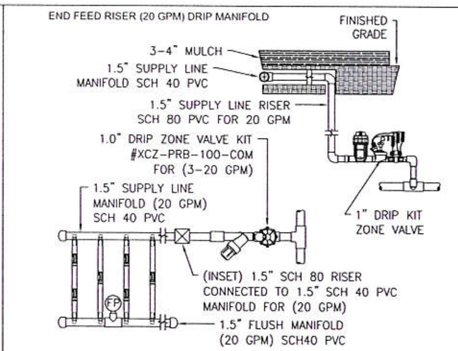

END FEED RISER (30 GPM) DRIP MANIFOLD

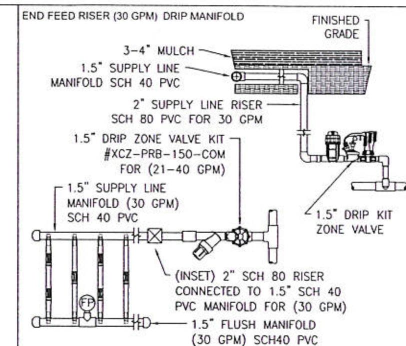

END FEED RISER (40 GPM) DRIP MANIFOLD

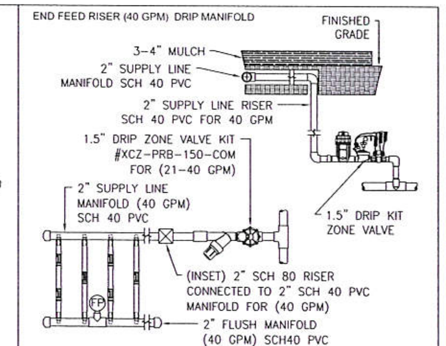

CENTER FEED RISER (3 GPM MAX)

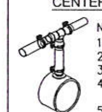

NOTES: TO INSTALL
1. 1/2" BLANK TUBING
2. MAX FLOW 3 GPM
3. SUPPLY LINE SIZE SEE PLAN
4. CLAMP ALL DRIPLINE AND BLANK TUBING FITTINGS
5. INSTALL RAIN BIRD INSERT ADAPTER KITS
   a. 1 1/2" XFD-INPVC
   b. 1" XFP-VCADP

NOTE:
DO NOT PUT MORE THAN 3 GPM ON INLINE DRIP EMITTER TUBING WITH 1/2" BLANK TUBING RISER FROM THE SUPPLY LINE! FAILURE TO COMPLY WITH THIS SPECIFICATION WILL GIVE THE OWNER "JUST CAUSE" TO IMMEDIATELY TERMINATE THE CONTRACT AND/OR WITHHOLD PROGRESS & FINAL PAYMENTS AS THIS WILL CAUSE THE DRIP SYSTEM TO FAIL!

CENTER FEED RISER (10 GPM) DRIP MANIFOLD

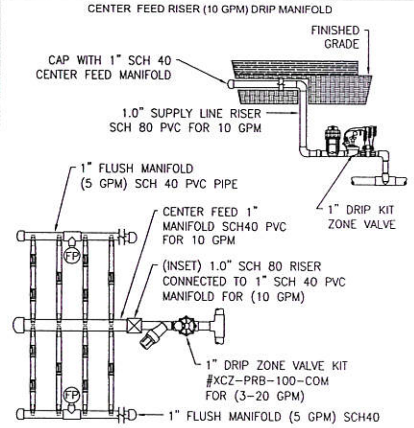

CENTER FEED RISER (20 GPM) DRIP MANIFOLD

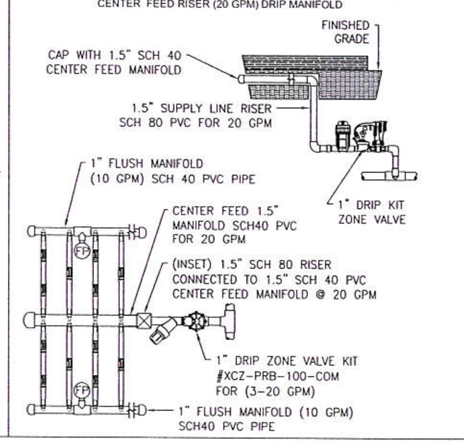

CENTER FEED RISER (30 GPM) DRIP MANIFOLD

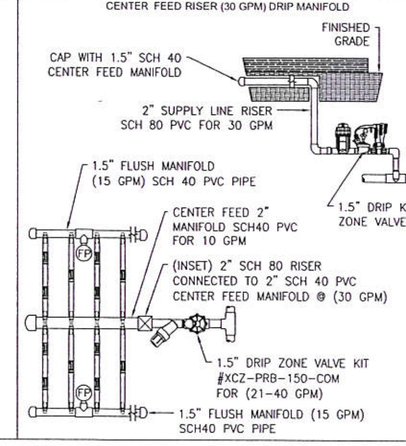

CENTER FEED RISER (40 GPM) DRIP MANIFOLD

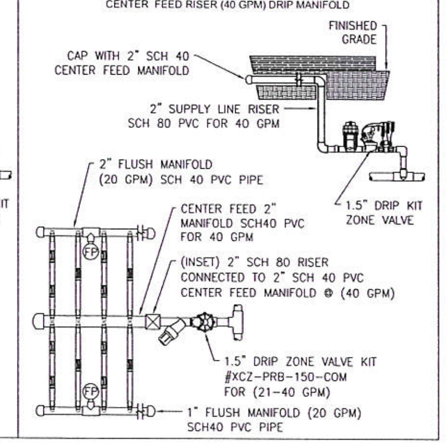

GPM IN PLANTER	3 GPM
RISER SIZE/TYPE	1/2" BLANK TUBING
SUPPLY MANIFOLD	N/A
ZONE VALVE #	XX
MANIFOLD TYPE	END FEED

GPM IN PLANTER	10 GPM
RISER SIZE/TYPE	1" PVC SCH80
SUPPLY MANIFOLD	1" SCH40 PVC
ZONE VALVE #	XX
MANIFOLD TYPE	END FEED

GPM IN PLANTER	20 GPM
RISER SIZE/TYPE	1 1/2" PVC SCH80
SUPPLY MANIFOLD	1 1/2" SCH40 PVC
ZONE VALVE #	XX
MANIFOLD TYPE	END FEED

GPM IN PLANTER	30 GPM
RISER SIZE/TYPE	2" PVC SCH80
SUPPLY MANIFOLD	1 1/2" SCH40 PVC
ZONE VALVE #	XX
MANIFOLD TYPE	END FEED

GPM IN PLANTER	40 GPM
RISER SIZE/TYPE	2" PVC SCH80
SUPPLY MANIFOLD	2" SCH40 PVC
ZONE VALVE #	XX
MANIFOLD TYPE	END FEED

CENTER FEED MANIFOLD	
GPM IN PLANTER	3 GPM
RISER SIZE/TYPE	1/2" BLANK TUBING
SUPPLY MANIFOLD	N/A
ZONE VALVE #	XX
MANIFOLD TYPE	CENTER FEED
FLUSH MANIFOLD	1/2" BLANK TUBING

CENTER FEED MANIFOLD	
GPM IN PLANTER	10 GPM
RISER SIZE/TYPE	1" PVC SCH80
SUPPLY MANIFOLD	1" SCH40 PVC
ZONE VALVE #	XX
MANIFOLD TYPE	CENTER FEED
FLUSH MANIFOLD	1" SCH40 PVC

CENTER FEED MANIFOLD	
GPM IN PLANTER	20 GPM
RISER SIZE/TYPE	1 1/2" PVC SCH80
SUPPLY MANIFOLD	1" SCH40 PVC
ZONE VALVE #	XX
MANIFOLD TYPE	CENTER FEED
MANIFOLD FLUSH	1" SCH40 PVC

CENTER FEED MANIFOLD	
GPM IN PLANTER	30 GPM
RISER SIZE/TYPE	1 1/2" PVC SCH80
SUPPLY MANIFOLD	1 1/2" SCH40 PVC
ZONE VALVE #	XX
MANIFOLD TYPE	CENTER FEED
MANIFOLD FLUSH	1.5" SCH40 PVC

CENTER FEED MANIFOLD	
GPM IN PLANTER	40 GPM
RISER SIZE/TYPE	2" PVC SCH80
SUPPLY MANIFOLD	2" SCH40 PVC
ZONE VALVE #	XX
MANIFOLD TYPE	CENTER FEED
MANIFOLD FLUSH	2" SCH40 PVC

NOTES: TO INSTALL DRIPLINE "RISERS & MANIFOLDS" AND DRIPLINE ZONE VALVES:
1. CONTRACTOR WILL FIRST DETERMINE THE FLOW REQUIRED FOR EACH PLANTER BED THEN SELECT THE RISER AND DRIPLINE MANIFOLD NEEDED. (SEE CHART).
2. ALL POSSIBLE COMBINATION OF RISER & DRIPLINE MANIFOLDS ARE SHOWN, ABOVE.
3. THE CONTRACTOR WILL INSTALL A DRIPLINE MINIMUM FOR EVER PLANTER BED. DRIPLINE MANIFOLD'S WILL BE SCH40 PVC ONLY AS THE INSERT ADAPTER FITTING IS DESIGNED TO ONLY BE USED ON SCH40 PVC.
4. SIZE DRIPLINE MANIFOLD THE MINIMUM OF 1" PVC SCH40 PVC PIPE; THE LARGEST DRIPLINE MANIFOLD WILL BE 2" SCH40 PVC PIPE.
5. DO NOT INSTALL ANY DRIP MANIFOLD WITH LESS THAN 1" PVC SCH40 PIPE – OR – NO GREATER THEN 2" PVC SCH 40 PIPE.
6. THE CONTRACTOR WILL INSTALL A MINIMUM SIZE OF 1" RAIN BIRD DRIP KIT ZONE VALVE FOR PLANTER BEDS WITH A FLOW REQUIREMENT NOT TO EXCEED 20 GPM.
7. THE CONTRACTOR WILL INSTALL A RAIN BIRD 1 1/2" DRIP KIT ZONE VALVE WHEN THE PLANTER BED FLOW REQUIREMENT IS BETWEEN 20 & 40 GPM. DO NOT INSTALL MORE THAN 40 GPM ON ANY 1 1/2" DRIP ZONE VALVE.
8. THE CONTRACTOR WILL INSTALL THE DRIP KIT ZONE VALVES SIZED FOR 20 & 40 GPM AND RISER/MANIFOLD COMBO BASED ON THESE DETAILS AND SPECIFICATIONS. IF THE CONTRACTOR FAILS TO INSTALL THE DRIP SYSTEM ACCORDING TO THESE DETAILS AND SPECIFICATIONS THE OWNER WILL HAVE "JUST CAUSE" TO IMMEDIATELY TERMINATE THE CONTRACT AND/OR WITHHOLD ALL PROGRESS & FINAL PAYMENTS.

MAX FLOW THRU SCH80 PIPE DIAMETER FOR "RISER"

RISER DIAMETER SIZE	MAXIMUM FLOW	VELOCITY	PSI LOSS/100'
1/2"	1-3 GPM	4.42	7.42
3/4"	4-6 GPM	4.70	5.74
1"	7-10 GPM	4.67	4.20
1 1/2"	11-20GPM	3.75	1.64
2"	21-40	4.46	1.68

MAX FLOW THRU SCH40 PIPE DIAMETER " DRIP MANIFOLD"

RISER DIAMETER SIZE	MAXIMUM FLOW	VELOCITY	PSI LOSS/100'
1/2"	1-3 GPM	4.50	6.55
3/4"	4-6 GPM	4.42	4.52
1"	7-10 GPM	4.62	3.69
1 1/2"	11-20 GPM	3.23	1.14
2"	21-40	4.46	1.68

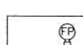

NOTE: SYMBOL REPRESENTS THE FLUSH VALVE – SEE DETAILS.

(27) DRIP MANIFOLD & RISER SIZING FOR VARIOUS GPM FLOW
N.T.S. 328413.05-20

1925 Prospect Ave.
Orlando, FL 32814
P (407) 661-9100
F (407) 661-9101
www.c-p.com

Cuhaci & Peterson
Architects Engineers Planners
ORLANDO • PHILADELPHIA

CLIENT NAME
SRK Lady Lake 43 Associates, L.L.C.
4053 Maple Road
Amherst, NY 14226-1072

SPRINKLER CONSULTANT
WILLIAM B. CURTIS
Phone: (407) 830-7041
sprinkler-consultant@earthlink.net

PROJECT NAME
Lady Lake Crossing East
@ SR 500 & US 27
Lady Lake, FL
Grey Shell Building

SHEET TITLE
IRRIGATION DETAILS

RELEASE

PROJECT NO. 2130712
DATE 1/12/15
DRAWN
CHECKED

IRR-6

RAIN BIRD® LANDSCAPE IRRIGATION & MAINTENANCE REMOTE (LIMR)

- RUN A SYSTEM TEST
- ACTIVATE A ZONE
- RUN A PROGRAM
- CUSTOM RECEIVER NAMING
- SKIP TO ANY ZONE BY ENTERING ITS NUMBER

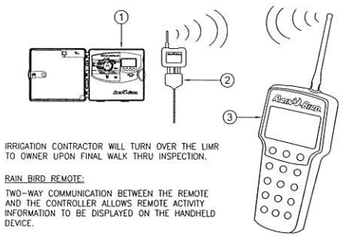

IRRIGATION CONTRACTOR WILL TURN OVER THE LIMR TO OWNER UPON FINAL WALK THRU INSPECTION.

RAIN BIRD REMOTE:

TWO-WAY COMMUNICATION BETWEEN THE REMOTE AND THE CONTROLLER ALLOWS REMOTE ACTIVITY INFORMATION TO BE DISPLAYED ON THE HANDHELD DEVICE.

32 RAIN BIRD LIMR HAND HELD REMOTE

N.T.S. 328410.15-17

CST
Creative Sensor Technology
TEL: + 508-763-8100

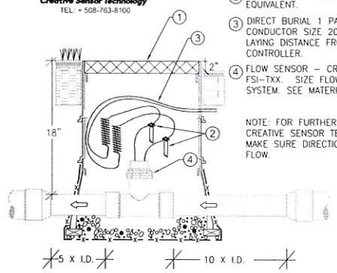

1. PLASTIC VALVE BOX TO PROVIDE ACCESS.
2. WATERPROOF WIRE SPLICE, 3M SCOTCHPACK OR EQUIVALENT.
3. DIRECT BURIAL 1 PAIR, TWISTED SHIELDED CABLE MINIMUM CONDUCTOR SIZE 20 AWG. DO NOT EXCEED 2,000 FEET IN LAYING DISTANCE FROM FLOW SENSOR TO IRRIGATION CONTROLLER.
4. FLOW SENSOR – CREATIVE SENSOR TECHNOLOGY SERIES FSI-TXX. SIZE FLOW SENSOR FOR GPM REQUIREMENTS OF SYSTEM. SEE MATERIAL LEGEND FOR SIZE SPECIFIED.

NOTE: FOR FURTHER INSTALLATION INSTRUCTIONS REVIEW CREATIVE SENSOR TECHNOLOGY INSTALLATION LITERATURE. MAKE SURE DIRECTION ARROW POINTS IN DIRECTION OF FLOW.

SIZING CHART: MODEL#	SIZE	OPERATING RANGE-GPM
FSI-T10	1"	0.8 – 50
FSI-T10	1 1/2"	1.8 –108
FSI-T10	2"	2.8 –170

INSTALL TEE ON PIPE WITH AT LEAST 10 PIPE DIAMETERS OF STRAIGHT PIPE UPSTREAM AND 5 PIPE DIAMETERS OF STRAIGHT PIPE DOWNSTREAM OF THE SENSOR.

33 CST TEE MOUNT FLOW SENSOR INSTALLATION

N.T.S. 328485-05

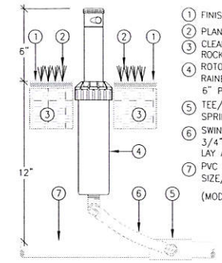

1. FINISH GRADE.
2. PLANT MATERIAL (TURF).
3. CLEAN SOIL, AMENDED/NATIVE, FREE OF ROCK AND DEBRIS
4. ROTOR POP-UP SPRINKLER: RAINBIRD MODEL # 5006+, 6" POP-UP HEIGHT, 3/4" INLET.
5. TEE/EL, PVC SCH40 LINE SIZE, SIZE PER SPRINKLER INLET 3/4" FIPT.
6. SWING JOINT, RAINBIRD SA-127575 3/4" MPT BOTH ENDS. 12" MINIMUM LAY ARM LENGTH.
7. PVC LATERAL (NON-PRESSURE PIPE). SIZE/TYPE PER PLAN.

(MODEL# 5006-PL-PC/FC-SAMR)
*IN STEM PRS WITH SAM.
FULL & PART CIRCLE

INSTALL 6" POPUP ROTOR SPRINKLER, 4" FROM PAVED EDGE, BUILDINGS AND FENCE AREAS, INSTALL PLUMB AND FLUSH TO GRADE, ADJUST COVERAGE TO AVOID OVERSPRAY. INSTALL "SAM" AS NEEDED TO PREVENT LOW HEAD DRAINAGE.

USE ONLY TEFLON TAPE OR SEALANT ON ALL THREADED CONNECTIONS.

34 RAIN BIRD 6" POP-UP ROTOR (5006+) PRS SAM

N.T.S. 328484.05-12

SECTION 02810 – IRRIGATION PIPING AND ACCESSORIES

PART 1 GENERAL

1.1 SUMMARY
1. DESIGN, DOCUMENT, FURNISH AND INSTALL A FULLY AUTOMATIC IRRIGATION SYSTEM, INCLUDING ALL DESIGN ENGINEERING, LABOR, MATERIALS, EQUIPMENT AND SERVICES REQUIRED TO PROVIDE A COMPLETE AND FULLY OPERATING SYSTEM, AS SPECIFIED HEREIN AND AS DIAGRAMMED IN THE DRAWINGS AND DETAILS. THE DRAWINGS, SPECIFICATIONS AND DETAILS MUST BE INTERPRETED AS ONE IN THE SAME AND ARE INTENDED TO COMPLEMENT EACH OTHER.
2. THE CONTRACTOR WILL FURNISH AND INSTALL ALL PARTS, WHICH MAY BE REQUIRED BY THE DRAWINGS AND DETAILS BUT OMITTED BY THE SPECIFICATIONS, OR VICE VERSA, JUST AS THOUGH REQUIRED BY ALL THREE. SHOULD THERE APPEAR TO BE DISCREPANCIES OR QUESTION OF INTENT, THE CONTRACTOR SHALL REFER THE MATTER TO THE IRRIGATION DESIGNER FOR DECISION, AND HIS INTERPRETATION SHALL BE FINAL, CONCLUSIVE AND BINDING.
3. TRENCH EXCAVATION, BACK FILLING AND BEDDING MATERIALS, TOGETHER WITH THE TESTING OF THE COMPLETED INSTALLATION SHALL BE INCLUDED IN THIS WORK.

1.2 DESCRIPTION OF WORK:
1. EXTENT OF IRRIGATION WORK IS SHOWN ON DRAWINGS, DETAILS AND MATERIAL SCHEDULES. IRRIGATION PLANS, DETAILS, SCHEDULES AND SPECIFICATIONS HOLD EQUAL PRECEDENCE.
2. INSTALL UNDERGROUND IRRIGATION SYSTEM AS SPECIFIED.
3. THE AUTOMATIC IRRIGATION SYSTEM WILL INCLUDE, BUT IS NOT LIMITED TO:
   a. PIPING, FITTINGS, SPRINKLER HEADS, BUBBLERS, INLINE DRIP EMITTER TUBING WHERE SPECIFIED ON PLANS, AND ALL ACCESSORIES NECESSARY FOR FULL AND ADEQUATE WATER COVERAGE FOR ALL LANDSCAPE MATERIALS AS SHOWN ON THESE PLANS.
   b. CONTROLLERS, CONTROL WIRE, SURGE PROTECTION, GROUNDING AND SLEEVING. REMOTE CONTROL ZONE VALVES AND MAINLINE ISOLATION VALVES, FITTINGS AND ACCESSORIES.
   c. EXCAVATING AND BACKFILLING IRRIGATION TRENCHES FOR PIPE, WIRE AND FOR ALL REQUIRED SLEEVING.
   d. SYSTEM TESTING, A MINIMUM OF 2 SITE INSPECTIONS TO VERIFY THE EQUIPMENT HAS BEEN CORRECTLY INSTALLED.
   e. REMOVAL OF ALL TRASH FROM THE SITE WHEN THE WORK HAS BEEN FINISHED.
4. ONCE THE WORK HAS BEEN COMPLETED THE IRRIGATION CONTRACTOR WILL REQUEST IN WRITING, TO THE LANDSCAPE ARCHITECT, 5 DAYS IN ADVANCE A FINAL WALK THROUGH SITE INSPECTION TO OBTAIN ACCEPTANCE OF THIS WORK BY THE OWNER.
5. THE WORK UNDER THIS SECTION SHALL COMPLY WITH ALL CITY, STATE AND FEDERAL ORDINANCES AND REGULATIONS OF AUTHORITIES HAVING JURISDICTION.
6. THE IRRIGATION CONTRACTOR WILL FULLY INFORM HIMSELF OF EXISTING SITE CONDITIONS BEFORE SUBMITTING HIS BID. REGARDLESS OF THE SITE CONDITIONS ENCOUNTERED IN THE ACTUAL WORK NO CLAIM FOR EXTRA COMPENSATION WILL BE ALLOWED ON ACCOUNT OF ACTUAL CONDITIONS INCONSISTENT WITH THOSE ASSUMED.

1.3 SCHEDULING:
1. THE IRRIGATION INSTALLATION WILL BE COORDINATED WITH ALL OTHER TRADES WORKING ON SITE.

1.4 SUBMITTALS:
1. CATALOG SHEETS: PRIOR TO COMMENCEMENT OF WORK THE IRRIGATION CONTRACTOR WILL SUBMIT CATALOG SHEETS TO THE LANDSCAPE ARCHITECT, OR COPIES THEREOF, FOR ALL EQUIPMENT SHOWN ON THESE PLANS, IN THE MATERIAL SCHEDULE, IN THE DETAIL SECTION, AND IN THE SPECIFICATIONS SECTION.
2. THE CONTRACTOR WILL NOT START THE WORK UNTIL HE HAS RECEIVED IN WRITING, ACCEPTANCE FROM THE LANDSCAPE ARCHITECT, THAT ALL MATERIAL SUBMITTED HAVE BEEN REVIEWED AND APPROVED.
3. RECORD IRRIGATION DRAWINGS: THE CONTRACTOR WILL FURNISH RECORD DRAWINGS OF THE COMPLETE IRRIGATION SYSTEM IN ACCORDANCE WITH THE GENERAL AND SPECIAL CONDITIONS.
4. CONSTRUCTION DRAWINGS WILL BE ON THE CONSTRUCTION SITE AT ALL TIMES WHILE THE IRRIGATION SYSTEM IS BEING INSTALLED. CONTRACTOR WILL MAKE A DAILY RECORD OF ALL WORK INSTALLED DURING EACH DAY. ACTUAL LOCATION OF VALVES, CONTROLLERS, QUICK COUPLERS AND ALL IRRIGATION PIPING AND/OR DRAINAGE PIPING WILL BE SHOWN ON THE PLANS BY DIMENSIONS FROM EASILY IDENTIFIED PERMANENT FEATURES, SUCH AS BUILDINGS, CURBS, FENCES, WALKS OR PROPERTY LINES. SITE INSPECTIONS WILL BE CANCELED AND THE CONTRACTOR CHARGED FOR THE SITE INSPECTION IF THE DRAWINGS ARE NOT AVAILABLE ON SITE AT THE TIME OF THE SITE VISIT. THE DRAWINGS WILL BE TO SCALE AND ALL INDICATIONS WILL BE RECORDED IN A NEAT, ORDERLY AND LEGIBLE WAY. THE RECORD SEPIA WILL BE TURNED OVER TO THE OWNER BEFORE THE FINAL ACCEPTANCE OF THE PROJECT.
5. SITE INSPECTIONS: (3) SITE INSPECTIONS ARE REQUIRED PLUS A FINAL WALK-THRU INSPECTION.
6. SUBMIT A WRITTEN REQUEST TO THE LANDSCAPE ARCHITECT 3 DAYS PRIOR TO SITE INSPECTION BEING REQUESTED BY THE IRRIGATION CONTRACTOR.
7. THE IRRIGATION CONTRACTOR WILL PROVIDE THE OWNER WITH WRITTEN RECOMMENDATIONS, OPERATING INSTRUCTIONS AND MAINTENANCE SCHEDULES FOR THE SYSTEM INCLUDING WATER APPLICATION RATES AND TIME SCHEDULE'S TO APPLY GIVEN PRECIPITATION RATES OF WATER APPLICATION FOR EACH ZONE THAT WILL NOTE WHICH ZONE COVERS EACH AREA.
8. TESTING AND INSPECTION CERTIFICATIONS WILL BE TURNED OVER TO THE OWNER (3) THREE DAYS PRIOR TO FINAL WALK-THROUGH SITE INSPECTION.
9. SUBMIT MANUFACTURER'S OPERATING INSTRUCTIONS TO OWNER (3) THREE DAYS PRIOR TO COMPLETION OF THE WORK, TO INCLUDE ALL EQUIPMENT INSTALLED.

1.5 GUARANTEE:
1. CONTRACTOR WILL TAKE FULL RESPONSIBILITY FOR THE PROPER INSTALLATION OF THE SPRINKLER SYSTEM AND FULL COVERAGE. IRRIGATION SYSTEM COMPONENTS SPECIFIED WILL BE INSTALLED ONLY WITHIN THE CAPABILITIES AND LIMITATIONS STATED BY THE MANUFACTURER, BY THESE STANDARDS, AND ANY APPLICABLE LOCAL CODES.
2. MATERIAL SUBSTITUTIONS ARE NOT PERMITTED WITHOUT WRITTEN APPROVAL FROM THE LANDSCAPE ARCHITECT AND THE IRRIGATION CONSULTANT.

PART 2 – PRODUCTS:

2.1 MATERIALS:
1. SEE MATERIAL SCHEDULE AND DETAIL SECTION FOR SPRINKLER PRODUCTS THAT ARE SPECIFIED AND WILL BE INSTALLED ON THIS PROJECT.
2. ALL MATERIALS IN THIS SYSTEM WILL BE NEW AND WITHOUT FLAWS OR DEFECTS AND OF THE QUALITY AND PERFORMANCE AS SPECIFIED.
3. ALL MATERIAL OVERAGES AT COMPLETION OF THIS WORK ARE THE PROPERTY OF THE OWNER AND WILL NOT BE REMOVED FROM THE SITE, SEE OWNER FOR LOCATION TO STORE ALL UNUSED OR MATERIALS NOT INSTALLED.
4. ALL PVC PIPE WILL BEAR THE FOLLOWING MARKINGS: MANUFACTURER'S NAME, NOMINAL PIPE SIZE, SCHEDULE OR CLASS, PRESSURE RATING IN PSI, AND DATE OF EXTRUSION.
5. UNLESS NOTED ON MATERIAL SCHEDULE, PVC PIPE 2 1/2" AND SMALLER, INSTALLED ON PRESSURE SIDE OF VALVES, I.E., MAINLINE PIPE, WILL BE, CLASS 200, TYPE 1120, CONFORMING TO ASTM D-2241, SDR-21 PVC, SOLVENT WELD, PRESSURE PIPE.
6. UNLESS NOTED ON MATERIAL SCHEDULE, ALL PVC PIPE IN SIZES 3" AND LARGER WILL BE CLASS 200, TYPE 1120, CONFORMING TO ASTM D-2241, SDR-21, GASKET BELL PRESSURE PIPE.
7. UNLESS NOTED ON MATERIAL SCHEDULE, ALL LATERAL PIPE 4" AND BELOW WILL BE, CLASS 200, TYPE 1120, SDR-21 SOLVENT-WELD PVC, CONFORMING TO ASTM D-2241.
8. WHEN APPLICABLE AND AS NOTED ON DESIGN IN THE MATERIAL SCHEDULE, INSTALL POLYETHYLENE PIPE 1 1/2" AND BELOW, SDR-15, CLASS 100 PSI, TYPE III, GRADE 3, CLASS C, CONFORMING TO ASTM D2239 WITH A MINIMUM OF 100 PSI RATING AND N.S.F. APPROVED.
9. POLYETHYLENE IRRIGATION FITTINGS:
   a. FITTINGS FOR POLYETHYLENE PIPE WILL BE INSERT PVC FITTINGS. FITTINGS WILL CONFORM TO NSF STANDARDS, ASTM D2609, AND WILL BE ATTACHED WITH TWO (2) DOG-EARED STAINLESS STEEL CLAMPS PER PIPE TO FITTING CONNECTION. STAINLESS STEEL CLAMPS WILL BE MANUFACTURED BY OETIKER.
8. POLYETHYLENE INLINE DRIP EMITTER TUBING FOR DRIP APPLICATIONS WHEN APPLICABLE AND SHOWN ON PLANS:
9. INSTALL RAIN BIRD XF BLANK TUBING FOR DRIP APPLICATIONS THAT REQUIRE BLANK PIPE BETWEEN DRIPLINE IN PLANTER BEDS.
10. WHEN APPLICABLE INSTALL RAIN BIRD XFS SUB-SURFACE INLINE DRIP EMITTER TUBING WHEN SPECIFIED ON PLANS.
11. SEE MATERIAL SCHEDULE FOR EMITTER GPH OUTPUT AND SPACING.
12. DRIP TREE RINGS FOR TREES AND SHRUBS, WHEN APPLICABLE, WILL BE RAIN BIRD INLINE DRIP EMITTER TUBING, SEE MATERIAL SCHEDULE FOR TYPE AND DETAILS.
13. ALL DRIP IRRIGATION FITTINGS WILL BE RAIN BIRD XFF, XFD OR MDCF SERIES, SEE MATERIAL SCHEDULE AND RAIN BIRD CATALOGUE.
14. SOLVENT-WELD FITTINGS:
   a. PVC PIPE FITTINGS, WILL BE SCHEDULE 40, ASTM D2466, SOLVENT WELD AS MANUFACTURED BY LASCO OR APPROVED EQUAL.
   b. FITTINGS WILL BEAR MANUFACTURER'S NAME OR TRADEMARK, MATERIAL DESIGNATION, SIZE, AND APPLICABLE I.P.S. SCHEDULE.
   c. PVC CEMENT WILL MEET ASTM D-2564 AND FF493, NSF/ANSI 14 & 61 FOR POTABLE WATER. PVC SOLVENT CEMENT, CHRISTY'S RED HOT BLUE GLUE. (NO EQUAL)
   d. PVC PRIMER WILL BE CHRISTY'S RED HOT PURPLE PRIMER, ASTM F-656 AND NSF/ANSI 14, NSF/ANSI 61. (NO EQUAL)
   e. THE IRRIGATION CONTRACTOR WILL WIPE ALL EXCESS PVC CEMENT OFF THE PIPE AND FITTINGS. THE IRRIGATION CONSULTANT WILL REJECT THE INSTALLATION OF THE PIPING NETWORK IF EXCESS PVC CEMENT IS NOT WIPED OF THE PIPE AND FITTINGS AND CONTRACTOR WILL REMOVE AND REPLACE ALL SUCH PIPE & FITTINGS, AT HIS OWN EXPENSE.
14. VALVE BOXES: INSTALL ONLY RAIN BIRD VALVE BOXES, WHICH ARE CONSTRUCTED TO WITHSTAND TRAFFIC LOADS COMMON TO THE AREA THEY ARE INSTALLED IN. THEY SHOULD BE SIZED TO ALLOW MAINTENANCE OF THE ENCLOSED VALVES WITHOUT EXCAVATION. THE VALVE BOX LID WILL BE TYPICALLY GREEN IN COLOR FOR POTABLE WATER SYSTEMS AND PURPLE IN COLOR FOR NON-POTABLE SPRINKLER SYSTEMS. THE VALVE BOX WILL BE HEAT STAMPED AND PERMANENTLY LABELED TO IDENTIFY ITS CONTENTS.
15. LOW VOLTAGE WIRING: LOW VOLTAGE WIRE THAT CONNECTS THE IRRIGATION CONTROLLER TO THE ZONE VALVES WILL BE UL/UF LISTED, DIRECT BURIAL WIRE. 600V RATED, SINGLE STRAND SOLID WIRE. SEE THE ANCILLARY PRODUCT SCHEDULE FOR THE WIRE GA SPECIFIED ON PLANS.
16. FOR CONVENTIONAL CONTROLLER'S INSTALL, COMMON WIRE, #12 GA. SINGLE STRAND (WHITE), AND HOT WIRE, #14 GA, SINGLE STRAND, (MULTI-COLORED), FROM PAIGE WIRE CO.
17. FOR 2-WIRE PATH CONTROLLER SYSTEMS, UNLESS OTHERWISE CALLED OUT IN THE ANCILLARY MATERIAL SCHEDULE, WILL BE RAIN BIRD MAXI-CABLE (14-2).
18. THE IRRIGATION CONTRACTOR WILL INSTALL ALL MAXI-WIRE CABLE IN A 1 1/2" GRAY ELECTRICAL SCH40 CONDUIT WITH LONG SWEEP ELBOWS.
19. EXTRA STOCK SHOULD BE PROVIDED IN ADDITION TO THE INSTALLED SYSTEM PROVIDING THE OWNER WITH THE FOLLOWING:
   e. TWO (2) SPRINKLER HEADS OF EACH SIZE AND TYPE.
   f. TWO (2) VALVE KEYS FOR OPERATING VALVES.
   g. TWO (2) KEYS FOR EACH AUTOMATIC IRRIGATION TIMER.
   h. TWO (2) WRENCHES FOR EACH TYPE OF HEAD.

31 SPECIFICATIONS

N.T.S.

CONTINUED...

PART 3 – EXECUTION

3.1 PRE-INSTALLATION:
1. OBTAIN LOCATION OF EXISTING UTILITIES FROM MUNICIPAL AND PRIVATE UTILITIES AND FROM OWNER. OBTAIN ALL NECESSARY PERMITS. INSPECT THE SITE FOR EXISTING CONDITIONS THAT MAY AFFECT THE IRRIGATION SYSTEM DESIGN OR INSTALLATION, AND DEVELOP A STRATEGY TO MINIMIZE DISTURBANCE OF EXISTING STRUCTURES AND LANDSCAPE.
2. EXERCISE CARE IN DIGGING AND OTHER WORK SO AS NOT TO DAMAGE EXISTING WORK INCLUDING UNDERGROUND CABLES AND PIPES. ANY PAVEMENT CUT, BROKEN OR UNDERMINED DURING INSTALLATION OF THE IRRIGATION SYSTEM SHALL BE FULLY REPLACED WITH IDENTICAL MATERIALS SO THAT THERE IS NO VISIBLE INDICATION OF PATCHING OR REPAVING.
3. DAMAGED UTILITY: SHOULD THE CONTRACTOR DAMAGE ANY UTILITY THE CONTRACTOR WILL NOTIFY THE RESPECTIVE UTILITY COMPANY AND SHALL BEAR THE FULL COST ACCRUED BY THE UTILITY COMPANY (LABOR AND MATERIAL PLUS DAMAGES IF APPLICABLE) FOR ITS REPAIR.
4. ANY OBJECTIONABLE MATERIALS SUCH AS OLD CONCRETE, BRICKS, OR OTHER DEBRIS ENCOUNTERED DURING THE INSTALLATION OPERATIONS SHALL BE REMOVED FROM THE SITE.

3.2 INSTALLATION
1. PIPE INSTALLATION: FLAG THE LOCATION OF ALL SPRINKLERS, VALVES, CONTROLLERS, SOURCE OF WATER AND ELECTRICAL COMPONENTS IN THE FIELD PRIOR TO INSTALLATION. CONDUCT ALL NECESSARY EXCAVATION FOR THE PROPER INSTALLATION OF PIPELINES AND ACCESSORIES, SEE TRENCHING DETAILS. AFTER INSTALLATION, BACKFILL AND COMPACT THE EXCAVATED SOIL TO MINIMIZE POST-CONSTRUCTION SETTLEMENT IN THE PIPE TRENCH. DEWATER, SHORE AND BRACE AS NEEDED TO COMPLETELY INSTALL THE PIPE.

2. PIPE SHALL BE INSTALLED AT SUFFICIENT DEPTH BELOW GROUND TO PROTECT IT FROM HAZARDS SUCH AS VEHICULAR TRAFFIC. DEPTHS OF COVER SHALL CONFORM TO SCS CODE 430-DD, WATER CONVEYANCE, AS FOLLOWS:
3. VEHICLE TRAFFIC AREAS:
   A. PIPE SIZE IN INCHES, DEPTH OF COVER IN INCHES
      a. 1/2-2 1/2" 18"
      b. 3-4" 24"
      c. 6" & LARGER 36"

   NON-TRAFFIC AND NON-CULTIVATED AREAS:
4. PIPE SIZE IN INCHES, DEPTH OF COVER IN INCHES
      a. 1/2-1 1/2" 12"
      b. 2-3" 18"
      c. 4-6" 18"
      d. 6" & LARGER 24"

5. SLEEVING: PROVIDE SEPARATE SLEEVES FOR PIPING AND ELECTRICAL WIRING. INSTALL SLEEVE PIPE WITH A WALL THICKNESS A MINIMUM EQUAL TO THE THICKNESS OF SCHEDULE 40. JACK AND BORE PIPING UNDER TRAFFIC AREAS AND AVOID PLACEMENT OF JOINTS UNDER PAVEMENT. PROPER BACKFILL AND COMPACTION PROCEDURES SHOULD BE FOLLOWED. INSTALL ONLY TEFLON PIPE SEALANT ON ALL THREADED CONNECTIONS. ALL SLEEVES WILL BE TWICE THE DIAMETER OF THE PIPE OR WIRE BEING SLEEVED.
6. DUCTILE IRON FITTINGS WITH JOINT RESTRAINT: FOR IRRIGATION SYSTEMS WITH PRESSURE GREATER THAN 70 PSI AT THE P.O.C., ALL FITTINGS 2 1/2" AND ABOVE INSTALLED ON PVC BELL END GASKET MAINLINE WILL BE MADE BY INSTALLING "HARCO" DUCTILE IRON FITTINGS WITH JOINT RESTRAINT'S AT ALL MAINLINE CHANGE IN DIRECTION. IT IS UNNECESSARY TO THRUST BLOCK DUCTILE IRON FITTING INSTALLED WITH JOINT RESTRAINTS.
7. THRUST BLOCKS: ALL LATERAL PIPE 2 1/2" AND LARGER PIPING WILL BE THRUST BLOCKING AT ALL CHANGES IN DIRECTION. THE SIZE OF THE THRUST BLOCK IS DETERMINED BY THE WORKING PRESSURE, THE SIZE AND TYPE OF FITTING, AND THE SOIL CONDITIONS AT THE JOB SITE. SEE PIPE MANUFACTURER SPECIFICATIONS FOR THRUST BLOCKING ALL PIPE.
8. ALL TRENCHES THAT ARE TO BE OPENED DURING ANY PARTICULAR DAY WILL BE CLOSED AND BACKFILLED THE SAME DAY OR WILL BE ADEQUATELY BARRICADED AND MARKED TO ENSURE PROTECTION AND SAFETY. BACKFILL SHALL BE THOROUGHLY COMPACTED AND EVENED OFF WITH ADJACENT SOIL LEVEL. DO ALL NECESSARY EXCAVATIONS, BACKFILLING AND COMPACTION REQUIRED FOR COMPLETE INSTALLATION OF THE SYSTEM. COMPACTION WILL BE MADE TO THE DENSITY OF THE ADJACENT NATIVE SOIL.
9. CONTROL VALVE INSTALLATION: VALVE INSTALLATION SHALL ALLOW ENOUGH CLEARANCE FOR PROPER OPERATION AND MAINTENANCE. AUTOMATIC CONTROL VALVES INSTALLED UNDERGROUND WILL BE INSTALLED IN A (MINIMUM) OF A 12" STANDARD SIZE VALVE BOX, MASTER VALVE AND FLOW METER WILL BE INSTALLED IN A JUMBO VALVE BOX ENCLOSURE.
10. SPRINKLER INSTALLATION: ON FLAT LANDSCAPED AREAS, INSTALL SPRINKLER PLUMB, IN AREAS WHERE SPRINKLERS ARE INSTALLED ON SLOPES, SPRINKLERS MAY BE TILTED TO PREVENT EROSION. INSTALL ALL SPRINKLERS ON SWING JOINTS AS SHOWN IN THE DETAILS. SPRINKLERS WILL BE ADJUSTED TO AVOID OVERSPRAY ONTO PAVEMENTS AND STRUCTURES, ADJUST SPRINKLERS SO THEY DON'T SPRAY WATER ON ROADS, SIDEWALKS, PAVEMENT, BUILDINGS AND OTHER VERTICAL STRUCTURES. PIPING MUST BE THOROUGHLY FLUSHED BEFORE INSTALLING SPRINKLER HEADS. ALLOW A MINIMUM SEPARATION OF 4" BETWEEN SPRINKLERS AND PAVED ROADS & SIDEWALKS.
11. LOW VOLTAGE WIRE INSTALLATION: INSTALL LOW VOLTAGE WIRE (30 VOLTS OR LESS) WITH A MINIMUM DEPTH OF COVER OF 18 INCHES. INSTALL ONLY WIRE CONNECTORS THAT ARE APPROVED FOR DIRECT BURIAL. ALL WIRE CONNECTIONS WILL BE MADE WITH MOISTURE PROOF WIRE CONNECTOR, I.E., 3M DBY OR DBR-6 SPLICE OR RAIN BIRD DB-SPLICE OR RAIN PRO DBC-BR WIRE SPLICES. PROVIDE A MINIMUM OF 36-INCHES COIL OF WIRE AT EACH CONNECTION OR CHANGE IN DIRECTION IN WIRE RUN TO ALLOW FOR EXPANSION/SHRINKAGE. ALL ABOVE GROUND WIRE RUNS AND WIRE ENTRIES INTO BUILDINGS AND PEDESTAL MOUNT IRRIGATION CONTROLLERS WILL BE MADE IN SCH40 PVC (GRAY) ELECTRICAL CONDUIT WITH LONG SWEEP ELBOWS. WIRE SPLICES WILL ONLY BE MADE INSIDE OF AN APPROVED VALVE BOX ENCLOSURE. WIRE SPLICES FOUND MADE OUTSIDE A VALVE BOX ENCLOSURE WILL BE REJECTED AND THE IRRIGATION CONTRACTOR WILL HAVE TO REMOVE AND REPLACE ANY SUCH SPLICES AT HIS OWN EXPENSE. ALL WIRE SPLICES LOCATIONS MUST BE RECORDED ON AS-BUILT PLAN.

3.3 TESTING AND INSPECTIONS:
1. AFTER ALL PVC CEMENTED JOINTS HAVE CURED AT LEAST 24 HOURS, FLUSH OUT LINES AND HYDROSTATICALLY TEST ALL PVC PIPE AT A PRESSURE OF 120 PSI.
2. PRESSURE WILL BE MAINTAINED ON PIPE FOR NOT LESS THAN 24 HOURS. SHOULD ANY LEAKS BE FOUND, THE LINE WILL BE REPAIRED AND RETESTED UNTIL SATISFACTORY.
3. FINAL INSPECTION: DEMONSTRATE THE ENTIRE SYSTEM PROVING ALL VALVES ARE PROPERLY BALANCED, ALL HEADS ARE PROPERLY ADJUSTED FOR RADIUS AND ARC OF COVERAGE.

3.4 MAINTENANCE:
1. MAINTENANCE RESPONSIBILITY SHALL INCLUDE FULL OPERATION AND MAINTENANCE OF THE IRRIGATION SYSTEM THROUGHOUT MAINTENANCE PERIOD.
2. PROVIDE SUFFICIENT FULL TIME PERSONNEL WHO ARE FULLY TRAINED IN IRRIGATION OPERATION AND MAINTENANCE PROCEDURES.
3. OPERATION AND MAINTENANCE SHALL INCLUDE, BUT NOT BE LIMITED TO, THE FOLLOWING:
   a. CLEANING AND REPAIRING ALL EQUIPMENT, VALVES, SPRAY HEADS, PIPE AUTOMATIC IRRIGATION CONTROLLER.
4. MAKE ALL NECESSARY REPAIRS FOR PROPER OPERATION AND FUNCTIONING OF THE SYSTEM. MAINTAIN ALL SPRAY & ROTOR/ROTARY SPRINKLER HEADS AND INLINE DRIP EMITTER SYSTEMS TO ASSURE PROPER EMISSION OF DESIGNED WATER QUANTITIES. REPLACE ALL BROKEN, STOLEN OR MALFUNCTIONING EQUIPMENT WITH NEW EQUIPMENT.
5. THE IRRIGATION CONTRACTOR WILL PROVIDE 8 HOURS OF TRAINING TO THE OWNERS MAINTENANCE STAFF. TRAINING WILL INCLUDE, BUT IS NOT LIMITED TO, SPRINKLER HEAD AND VALVE REPAIR, BROKEN PIPE REPAIR AND PROGRAMMING VARIOUS SEASONAL WATERING SCHEDULES FOR THE AUTOMATIC IRRIGATION TIMER.
6. PRIOR TO COMPLETION OF THE WORK THE CONTRACTOR WILL TURN OVER THE LIST OF NAMES TO THE OWNER WHO HAVE BEEN TRAINED BY THE CONTRACTOR AND ARE FULLY KNOWLEDGEABLE OF MAINTENANCE.
7. PRIOR TO COMPLETION THE IRRIGATION CONTRACTOR WILL PROVIDE THE OWNER WITH THE NAMES, ADDRESSES AND PHONE NUMBERS OF THREE (3) LOCAL IRRIGATION WHOLESALE SUPPLY DISTRIBUTORS.

3.5 GUARANTEE:
1. THE CONTRACTOR SHALL OBTAIN IN OWNERS NAME THE STANDARD WRITTEN MANUFACTURER'S GUARANTEE OF ALL MATERIALS FURNISHED UNDER THIS SECTION WHERE SUCH GUARANTEES ARE OFFERED IN THE MANUFACTURER'S PUBLISHED PRODUCT DATA. THESE GUARANTEES SHALL BE IN ADDITION TO, AND NOT IN LIEU OF, OTHER LIABILITIES THAT THE CONTRACTOR MAY HAVE BY LAW.
2. IN ADDITION TO THE MANUFACTURERS GUARANTEES THE CONTRACTOR SHALL WARRANTY THE ENTIRE IRRIGATION SYSTEM, BOTH PARTS LABOR AND MAINTENANCE FOR A PERIOD OF ONE (1) YEAR FROM THE DATE OF ACCEPTANCE BY THE OWNER. AS PART OF THE ONE-YEAR WARRANTY THE CONTRACTOR SHALL PERFORM THE FIRST YEAR MAINTENANCE FOR THE IRRIGATION SYSTEM. SHOULD ANY PROBLEMS DEVELOP WITHIN THE WARRANTY PERIOD BECAUSE OF INFERIOR OR FAULTY MATERIALS OR WORKMANSHIP, THEY SHALL BE CORRECTED TO THE SATISFACTION OF THE LANDSCAPE ARCHITECT AT NO ADDITIONAL EXPENSE TO THE OWNER. A WRITTEN WARRANTY SHOWING DATE OF COMPLETION AND PERIOD OF WARRANTY SHALL BE SUPPLIED UPON COMPLETION OF THIS PROJECT.

3.6 CLEAN UP
1. UPON COMPLETION OF THE WORK THE IRRIGATION CONTRACTOR WILL REMOVE ALL LEFTOVER MATERIALS AND EQUIPMENT FROM THE SITE IN A SAFE AND LEGAL MANNER. THE CONTRACTOR WILL REMOVE ALL DEBRIS RESULTING FROM FROM WORK OF THIS SECTION.

3.7 QUALITY ASSURANCE:
1. THE IRRIGATION CONTRACTOR WILL TURN OVER TO THE OWNER (3) DAYS PRIOR TO COMPLETION OF THE WORK ALL ORIGINAL INVOICES OF THE MATERIALS INSTALLED ON THIS PROJECT. THIS IS REQUIRED TO ASSIST THE OWNER WITH DATES TO QUALIFY FOR THE MATERIAL WARRANTEE TIME PERIODS EXTENDED BY THE MANUFACTURER'S OF THE PRODUCTS INSTALLED.

END OF SECTION

328489-16

1925 Prospect Ave.
Orlando, FL 32814
P (407) 661-9100
F (407) 661-9101
www.s-p.com
Chakraborty Sullivan Architects, P.A. Licensed
Chakraborty & Peterson
Architects Engineers Planners
ORLANDO • PHILADELPHIA

CLIENT NAME
SRK Lady Lake 43 Associates, L.L.C.
4053 Maple Road
Amherst, NY 14226-1072

PROJECT NAME
Lady Lake Crossing East
@ SR 50 & US 27
Lady Lake, FL
Grey Shaft Building

SHEET TITLE
IRRIGATION SPECIFICATIONS

SPRINKLER CONSULTANT
WILLIAM B. CURTIS
Phone: (407) 330-7041
wpcdesign@earthlink.net

REVISIONS

PROJECT NO. 2130172
DATE 1/12/15
DRAWN
CHECKED

IRR-7

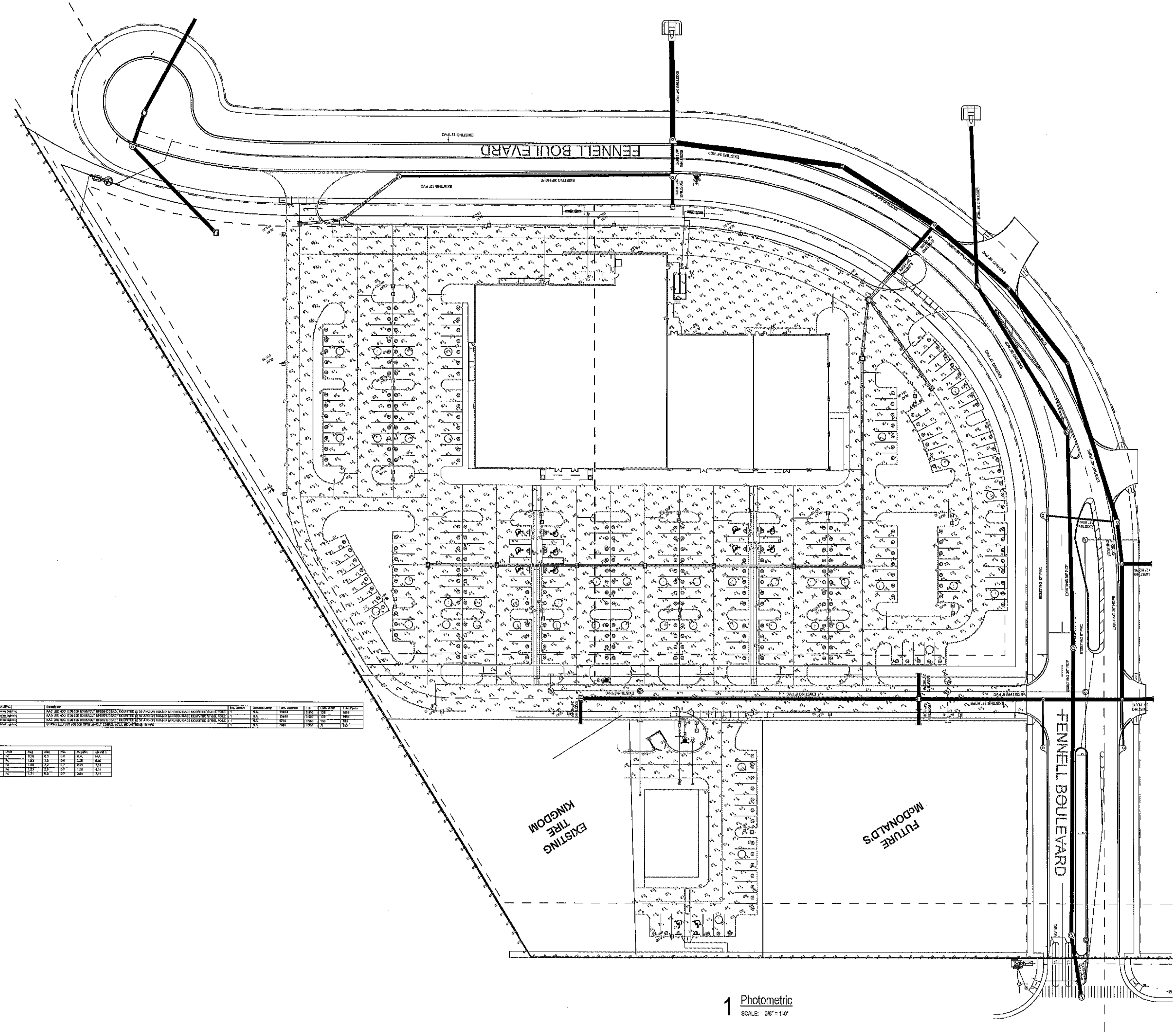

1 Photometric
SCALE: 3/8" = 1'-0"

Luminaire Schedule

Label	Symbol	Qty	Arrangement	MANUFAC	Description	No. Lamps	Lumens/Lamp	Lum. Lumens	LLF	Lum. Watts	Total Watts
SLA1		12	SINGLE	Lithonia Lighting	KAD LED 40C 1000 50K R3 MVOLT RPD09 DDBXD; MOUNTED @ 30' AFG ON ROUND TAPERED BASE MOUNTED STEEL POLE	1	N.A.	13988	0.950	138	1656
SLA2		14	BACK-BACK	Lithonia Lighting	KAD LED 40C 1000 50K R5 MVOLT RPD09 DDBXD; MOUNTED @ 30' AFG ON ROUND TAPERED BASE MOUNTED STEEL POLE	1	N.A.	15988	0.950	138	3864
SLA-HS		1	SINGLE	Lithonia Lighting	KAD LED 40C 1000 50K R3 MVOLT RPD09 DDBXD; MOUNTED @ 30' AFG ON ROUND TAPERED BASE MOUNTED STEEL POLE	1	N.A.	9740	0.900	138	138
SLW1		3	SINGLE	Lithonia Lighting	WSR LED 3AC 700 50K TFTM MVOLT DDBXD; WALL MOUNTED @ 18' AFG	1	N.A.	7040	0.950	71	213

Calculation Summary

Label	CalcType	Units	Avg	Max	Min	Avg/Min	Max/Min
BOUNDARY LINE	Illuminance	Fc	0.18	0.9	0.0	N.A.	N.A.
PARKING LOTS	Illuminance	Fc	1.83	3.0	0.6	3.05	5.00
ROADWAY	Illuminance	Fc	1.60	2.2	0.7	2.29	3.14
SMALL PARCEL	Illuminance	Fc	1.33	2.9	0.7	1.90	4.14
BACK OF HOUSE	Illuminance	Fc	1.71	5.0	0.7	2.44	7.14

Cuhaci & Peterson
Architects Engineers Planners
1925 Prospect Ave.
Orlando, FL 32814
P (407) 661-9100
F (407) 661-9101
www.c-p.com

CLIENT NAME
SRK Lady Lake 43 Associates, L.L.C.
4053 Maple Road
Amherst, NY 14226-1072

PROJECT NAME
Lady Lake Crossing East
@S.R. 500 & US 27
Lady Lake, Florida

SHEET TITLE
Photometric Plan

EUGENIO E. DE ALBA
LICENSE No 84611
STATE OF FLORIDA
PROFESSIONAL ENGINEER
01/19/2015

Revision Schedule

No.	Description	Date

PROJECT NO. 2150712
DATE 01/12/2015
DRAWN JDT
CHECKED EED

E003

KAD LED
LED Area Luminaire

Catalog Number
Notes
Type SLA2

Specifications

EPA: 1.2 ft² (0.11 m²)
Length: 17-1/2" (44.5 cm)
Width: 17-1/2" (44.5 cm)
Height: 7-1/8" (18.1 cm)
Weight (max): 36 lbs (16.4 kg)

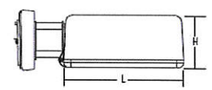

Introduction

The Contour® Series luminaires offer traditional square dayforms with softened edges for a versatile look that complements many applications. The KAD LED combines the latest in LED technology with the familiar aesthetic of the Contour® Series for stylish, high-performance illumination that lasts. It is ideal for replacing 100- 400W metal halide in area lighting applications with typical energy savings of 65% and expected service life of over 100,000 hours.

Ordering Information

EXAMPLE: KAD LED 40C 1000 40K R5 MVOLT PUMBAK04 DDBXD

KAD LED	40C	1000 mA	50K	R3	MVOLT	RPD09 DDBXD
Series	**LEDs**	**Drive current**	**CCT**	**Distribution**	**Voltage**	**Mounting**
KAD LED	20C 20 LEDs 30C 30 LEDs 40C 40 LEDs 60C 60 LEDs	530 530 mA 700 700 mA 1000 1000 mA	30K 3000 K 40K 4000 K 50K 5000 K	R2 Type II R3 Type III R4 Type IV R5 Type V	MVOLT 120 [1] 208 [1] 240 [1] 277 [1] 347 480	**Shipped included** PUMBAK__ Universal mounting adapter [7] 04 4" arm SPD__ Square pole 06 6" arm RPD__ Round pole 09 9" arm WBD__ Wall bracket 12 12" arm WWD__ Wood pole or wall **Shipped separately** DAD12P Degree arm (pole) DAD12WB Degree arm (wall)

Options

Shipped installed

PER7	NEMA twist-lock receptacle only (no controls)
SF	Single fuse (120, 277, 347V) [1]
DF	Double fuse (208, 240, 480V) [1]
PIR	Motion sensor, 8-15' mounting height [8]
PIRH	Motion sensor, 15-30' mounting height [8]
BL30	Bi-level switched dimming, 30% [6]
BL50	Bi-level switched dimming, 50% [6]
PNMTDD3	Part night, dim till dawn [6]
PNMT5D3	Part night, dim 5 hrs [6]
PNMT6D3	Part night, dim 6 hrs [6]
PNMTD3	Part night, dim 7 hrs [6]
HS	Houseside shield [7]

Shipped separately [7]

WG	Wire guard

Finish (required)

DDBXD	Dark bronze
DBLXD	Black
DNAXD	Natural aluminum
DWHXD	White
DDBTXD	Textured dark bronze
DBLBXD	Textured black
DNATXD	Textured natural aluminum
DWHGXD	Textured white

Drilling

Template #5
Top of Pole

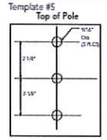

Accessories

Ordered and shipped separately.

OLL127F 1.5 IU	Photocell - SSL twist-lock (120-277V) [1]	KMA DDBXD U	Mast arm adapter (specify finish)
OLL347F 1.5 CUL IU	Photocell - SSL twist-lock (347V) [1]	KADWG U	Wire guard accessory
OLL480F 1.5 CUL IU	Photocell - SSL twist-lock (480V) [1,5]	PUMBAK DDBXD U [4]	Square and round pole universal mounting bracket adapter (specify finish)
SC U	Shorting cap [1]		
KADLSTRS U	Houseside shield		

For more control options, visit DTL and ROAM online.

Tenon Mounting Slipfitter [7]

Tenon	I.D.	A	B	C	D	E	F	G
2 3/8"	T25-TM	T25-3IN	T25-2NE	T25-2SQ	T25-3QR [1]	T25-3NW	T25-3SW	T25-4SQ
2 7/8"	T25-TM	T25-3IN	T25-2NE	T25-2SQ	T25-3QR	T25-3NW	T25-3SW	T25-4SQ
4"	T35-TM	T35-3IN	T35-2NE	T35-2SQ	T35-3QR	T35-3NW	T35-3SW	T35-4SQ

*For round pole mounting (RPM) only. † Requires 9" or 12" arms.

Notes

1 MVOLT driver operates on any line voltage from 120-277V (50/60 Hz). Single fuse (SF) requires 120, 277 or 347 voltage option. Double fuse (DF) requires 208, 240 or 480 voltage option.
2 Available as a separate combination accessory: PUMBAK (finish U).
3 Specifies a ROAM® enabled luminaire with 0-10V dimming capability. PER option required. Additional hardware and services required for ROAM® deployment; must be purchased separately. Call 1-800-442-6745 or email sales@lithonialighting.net. N/A with BL30, BL50, PIR or PIRH.
4 PIR specifies the Sensor Switch® SBGR-10-DCR control. PIRH specifies the Sensor Switch® SBGR-10-DCR control. See Motion Sensor Guide for details. Dimming driver standard.
5 Requires an additional switched circuit with same phase as main luminaire power.
6 Dimming driver standard. MVOLT only.
7 Also available as a separate accessory; see Accessories information at left.
8 Requires luminaire to be specified with PER option. Ordered and shipped as a separate line item.

LITHONIA LIGHTING.
One Lithonia Way • Conyers, Georgia 30012 • Phone: 800.279.8441 • Fax: 770.918.1209 • www.lithonia.com

© 2012-2014 Acuity Brands Lighting, Inc. All rights reserved.

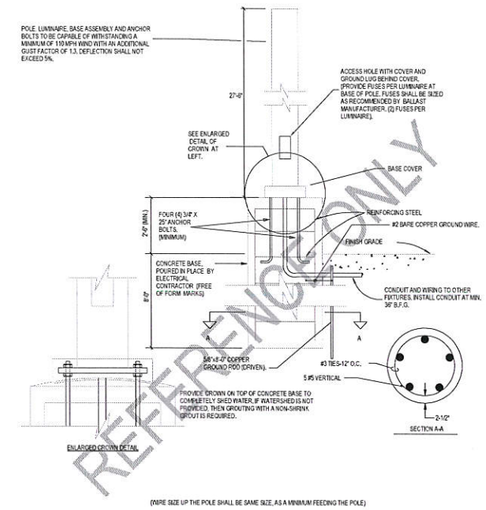

1 POLE BASE-A.F.G. EMBED-DIAGRAMATIC: CONTRACTOR TO PROVIDE ENGINEERED DRAWINGS
Scale: NTS

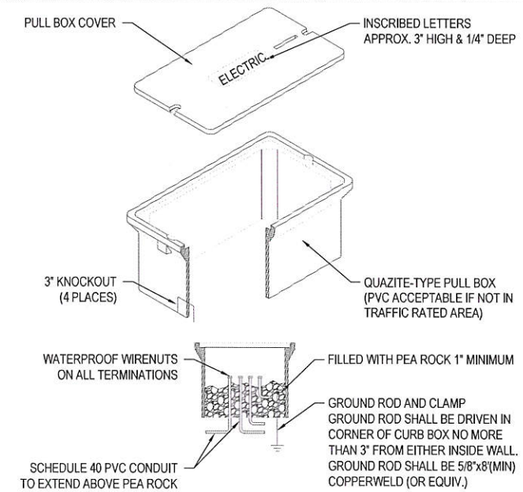

2 Inground Pull Box Detail
Scale: None

1925 Prospect Ave.
Orlando, FL 32814
P (407) 661-9100
F (407) 661-9101
www.cp-e.com
Cubaci & Peterson
Architects Engineers Planners

CLIENT NAME
SRK Lady Lake 43 Associates, L.L.C.
4053 Maple Road
Amherst, NY 14226-1072

PROJECT NAME
Lady Lake Crossing East
@S.R. 500 & US 27
Lady Lake, Florida

SHEET TITLE
Site Plan Detail

Revision Schedule		
No.	Description	Date

PROJECT NO. 2150172
DATE 01/12/2015
DRAWN JDT
CHECKED EED

E201

TOWN COMMISSION AGENDA ITEM

K-9

REQUESTED COMMISSION MEETING DATE: March 2, 2015

SUBJECT: **"Spring Into Safety" Community Fair (Lady Lake Police Department and The Home Depot)**

DEPARTMENT: POLICE

STAFF RECOMMENDED MOTION: Approval for the Lady Lake Police Department to partner with The Home Depot and co-host the "Spring Into Safety" Community Fair for the Town of Lady Lake on Saturday, April 18, 2015 from 10:00 am until 2:00 pm.

SUMMARY: The Lady Lake Police Department (LLPD) is requesting to co-host "Spring Into Safety" Community Fair on Saturday, April 18, 2015 from 10:00 am until 2:00 pm to heighten crime prevention and enhance safety awareness. This event will be held in the parking lot area of The Home Depot featuring a bicycle safety course as well as public safety booths and vehicles. Community partners expressing a strong interest in participating at this time include: The Villages Public Safety, Lake County Fire Department, Seniors vs. Crime, McDonalds and our local Police Departments and Sheriff's Offices. This event will be advertised locally through area businesses and news media.

FISCAL IMPACT: $0

[ ] Capital Budget
[ ] Operating
[ ] Other

ATTACHMENTS: [ ] Ordinance [ ] Resolution [ ] Budget Resolution

[ ] Other

[ ] Support Documents

DEPARTMENT HEAD	Submitted		Date 2/20/2015
HR	Approved as to Form		Date 2-23-15
FINANCE DEPARTMENT JRM	Approved as to Budget Requirements		Date 2/23/2015
TOWN MANAGER	Approved Agenda Item for:	3-2-15	Date 2/23/15

Reviewed

COMMISSION ACTION:

[ ] Approved as Recommended [ ] Disapproved [ ] Tabled Indefinitely

[ ] Continued to Date Certain [ ] Approved with Modification

L-10

TOWN COMMISSION AGENDA ITEM

REQUESTED COMMISSION MEETING DATE: March 2, 2015

SUBJECT: **Ordinance 2015-01 – Rolling Acres Self Storage Facility (Tree Tops Golf, Inc.) Located at the Corner of West Lady Lake Blvd. and Rolling Acres Road at 175 S. Rolling Acres Road - Providing for a Modification of the Town of Lady Lake Planned Commercial (CP) Zoning Memorandum of Agreement (MOA). (Alternate Key #3250290)**

DEPARTMENT: **GROWTH MANAGEMENT**

STAFF RECOMMENDED MOTION:

Staff recommends approval of Ordinance 2015-01 providing for a Modification of the Town of Lady Lake Planned Commercial (CP) Zoning Memorandum of Agreement (MOA).

Applicant, Michael or Joy Girard, has submitted an application on behalf of Rolling Acres Self Storage (a.k.a. Tree Tops Golf, Inc.) for property located at the corner of West Lady Lake Boulevard and Rolling Acres Road – addressed at 175 S. Rolling Acres. The property includes approximately 12.65 ± acres (referenced by Alternate Key Number 3250290) currently in the Town of Lady Lake.

The subject property is currently operating as a Self-Storage Facility consisting of eight (8) buildings providing 109,700 square feet of storage space. There is also now a 1,200 square foot office in addition to the original office building of 3,389 square feet. There is also a miniature golf course and batting cages in operation on the property, as well as an existing building of 763 square feet to be converted to a manager's residence. Pursuant to the provisions of the Town of Lady Lake Land Development Regulations, the applicant is requesting to modify the Memorandum of Agreement, formerly adopted under Ordinance 2013-10, to include the Motor Vehicle/RV/Boat Storage as a permitted use, as well as the following changes:

- A manager's residence was not constructed in Phase 1. This is now proposed in Phase 2 in an existing building near the secondary egress drive on West Lady Lake Boulevard. Building being approximately 763 square feet.

- Phase 2 changes the originally planned twelve (12) mini storage buildings totaling 41,000 square feet to two (2) proposed Indoor Motor Vehicle/RV/Boat Storage Buildings totaling 41,400 square feet.

- Phase 2 now includes a proposed RV sewage dump station approximately 40' inside the gate at the secondary egress drive.

- Phase 3 is no longer proposed. Six (6) mini storage buildings will not be planned in Phase 3.

- A new total of 152,452 square feet of buildings are planned for the site with a net reduction of 9,548 square feet from the originally approved development. The originally approved building coverage on-site was 162,000 square feet.

As part of the application, the applicant has provided the new terms of the Memorandum of Agreement (Exhibit "B") and a bubble plan (Exhibit "C") showing the modified buildings, dump station location, new phasing boundaries, retention pond areas, parking area, drive aisles, landscaping buffers, dumpsters location, and gate.

The application has been reviewed and determined to be complete. The applicant has submitted all appropriate material in compliance with the Land Development Regulations (LDRs) and they are ready for transmittal to the Planning & Zoning Board.

The Zoning and Future Land Use designations of the adjacent properties are as follows:

Zoning

Subject Property	Lady Lake – Planned Commercial (CP)
Zoning of Adjacent Properties	
West	Lake County-Agricultural Residential
East	Lady Lake –MF-12 (Up to 12 dwelling units per acre)
North	PFD (Public Facilities District)/ Lake County-Agricultural
South	Lady Lake- Planned Unit Development (PUD)

Future Land Use

Subject Property	Lady Lake – General Commercial Retail Sales & Services (RET)
Future Land Use of Adjacent Properties	
West	Lake County – Urban Low
East	Lady Lake –Multi-Family Low Rise- (MF-LR)
North	Lady Lake- Other Institutional Facilities (OIF)/Lake County-Urban Low
South	Lady Lake – General Commercial Retail Sales & Services (RET)

The current Future Land Use Designation of the subject property (12.65 ± acres) Lady Lake Commercial General – Retail Sales & Services (RET) is compatible with the requested commercial uses. Therefore, the applicant is not requesting any changes regarding the future land use designation with this application.

Comments:

1.) Permitted Uses and restrictions of the property will be governed by the attached Memorandum of Agreement, superseding all uses and prohibitions as stated in the Memorandum of Agreement executed on September 18, 2013, as recorded in ORB. 4384 PGS. 886-893.

2.) Should the amendment to the Memorandum of Agreement be approved, the applicant will have to supply a modified site plan, via the major modification to site plan process (applicant is undergoing this process concurrently).

Notices to inform the surrounding property owners (9) within 150' of the property of the proposed Rezoning-CP MOA Amendment were mailed by certified mail return receipt on Thursday, January 22, 2015. All certified mail receipts have been returned; no comments regarding objection or support of the amendment have been received to date.

Past Actions

At the December 15, 2014, **Special Commission Meeting** (Conceptual Workshop) it was the consensus of the Commission that they were in favor of advancement of the proposed changes for Rolling Acres Self Storage (Tree Tops) as presented.

The application materials were circulated to members of the **Technical Review Committee (TRC**), on Wednesday, January 28, 2015. No comments were forwarded that would prohibit advancement of the application to the Planning and Zoning Board.

At the February 9, 2015, meeting of the **Planning and Zoning Board**, the board voted 5-0 to forward Ordinance 2015-01 to the Town Commission with the recommendation of approval.

Public Hearing Dates:

The **Town Commission** is scheduled to consider Ordinance 2015-01 on second reading and final reading at their regular meeting to be held on Monday, March 16, 2015, at 6:00 p.m.

FISCAL IMPACT: $ -0- [ ] Capital Budget

[ ] Operating [ ] Other

ATTACHMENTS: [x] Ordinance(s) [ ] Resolution [ ] Budget Resolution

[ ] Other

[ ] Support Documents/Contracts Available for Review in Manager's Office

---

2-23-2015

DEPARTMENT HEAD	**Submitted** 2/23/15	**Date**
FINANCE DEPARTMENT	**Approved as to Budget Requirements**	**Date**
TOWN ATTORNEY	**Approved as to Form and Legality**	**Date**
TOWN MANAGER	**Approved Agenda Item for:** 3.2.15	**Date** 2.24.15

COMMISSION ACTION: [ ] Approved as Recommended [ ] Disapproved

[ ] Tabled Indefinitely [ ] Continued to Date Certain

[ ] Approved with Modification

ORDINANCE NO. ~~2013-10~~2015-01

AN ORDINANCE OF THE TOWN OF LADY LAKE; AMENDING ORDINANCE NO. ~~98-08~~ 2013-10; REQUESTING AMENDMENT OF THE MEMORANDUM OF AGREEMENT (MOA) FOR THE PLANNED COMMERCIAL DISTRICT (CP) FOR PROPERTY OWNED BY TREE TOPS GOLF INC., SUBJECT PROPERTY LOCATED AT 175 S. ROLLING ACRES RD. (A~~LTERNATE~~ K~~EY~~ #3250290), WITHIN THE TOWN LIMITS OF THE TOWN OF LADY LAKE, FLORIDA; PROVIDING FOR SEVERABILITY; ESTABLISHING AN EFFECTIVE DATE.

WHEREAS, on December 2, 1991, the Town of Lady Lake adopted a Comprehensive Plan (Ordinance No. 91-21) pursuant to the requirements of Chapter 163, Part II, Florida Statutes and Chapter 9J-5, Florida Administrative Code; and

WHEREAS, on January 23, 1992, the Florida Department of Community Affairs determined that the Town of Lady Lake Comprehensive Plan was in compliance with the requirements of Chapter 163, Part II, Florida Statutes, and Chapter 9J-5, Florida Administrative Code; and

WHEREAS, on August 15, 1994, the Town of Lady Lake adopted the Land Development Regulations of the Town of Lady Lake, Florida, and Official Zoning Map in accordance with the Town of Lady Lake Comprehensive Plan and the requirements of Chapter 163, Part II, Florida Statutes; and

WHEREAS, on February 9, 2015, pursuant to the provisions of the Town of Lady Lake Land Development Regulations, the Planning and Zoning Board of the Town of Lady Lake reviewed the proposed amendment to the Memorandum of Agreement which is attached hereto as Exhibit "B" and recommended to the Town Commission of the Town of Lady Lake that said amendment be adopted; and

WHEREAS, the Town Commission of the Town of Lady Lake, through Ordinance No. ~~98-08~~2013-10, approved, at a duly noticed meeting, re-designation of said property owned by Tree Tops Golf Inc., and approved and entered into a Memorandum of Agreement setting forth certain permitted uses under the "CP" zoning; and

WHEREAS, on September 18, 2013, the Town of Lady Lake and Tree Tops Golf Inc. amended the Memorandum of Agreement to include additional uses as recorded in ORB 4384, Pgs. 886-893, and at this time, again desire to amend the Memorandum of Agreement and the "CP" zoning to include and establish new permitted uses as well as other terms regarding setbacks, new buildings, landscaping buffers, parking spaces, loading space requirements, and water retention areas.

NOW THEREFORE, be it ordained and enacted by the Town Commission of the Town of Lady Lake, in Lake County, Florida:

Section 1. **Amendment for Changes Within the Site.** Said property is more particularly described in Exhibit "A", attached hereto and incorporated herein. The existing "CP" zoning and the existing Memorandum of Agreement entered into by the parties is hereby modified and amended to include and establish new permitted uses, as well as, reducing the overall square footage of the development by 9,548 feet, amending the number and size of buildings to be constructed, removing Phase III from the project, and constructing a manager's residence in Phase II. ~~o~~Other terms regarding setbacks, ~~new buildings~~, landscaping buffers, parking spaces, loading space requirement and water retention areas, remain unchanged.

Section 2. **Conflict.** The prior agreement as adopted under Ordinance No. ~~98-08~~2013-10 is hereby deleted in its entirety and is replaced in its entirety by Exhibit "B".

Section 3. **Severability.** If any section, sentence, clause, phrase or word of this Ordinance is for any reason held, or declared to be unconstitutional, inoperative or void, such holding or invalidity shall not effect the remaining portions of this Ordinance; and it shall be construed to have been the Town Commission's intent to pass this Ordinance without such unconstitutional, invalid or inoperative part therein; and the remainder of this Ordinance, after the exclusion of such part or parts, shall be deemed and held to be valid, as if such parts had not been included herein; or if this Ordinance or any provisions thereof shall be held inapplicable to any person, groups of persons, property, kind of property, circumstances or set of circumstances, such holding shall not effect the applicability thereof to any other person, property or circumstances.

Section 4. **Effective Date.** This Ordinance shall become effective immediately upon final reading and adoption by the Town Commission of Town of Lady Lake, Florida in accordance with Florida law.

PASSED AND ORDAINED this ~~___~~16th day of ~~____~~March,~~,~~ 201~~5~~4, in the regular session of the Town Commission of the Town of Lady Lake, Lake County, Florida, upon the Second/Final Reading.

TOWN OF LADY LAKE, FLORIDA

_____

~~James Richards~~Ruth Kussard, Mayor

ATTEST:

_____

Kristen Kollgaard, Town Clerk

APPROVED AS TO FORM:

_____

Derek Schroth, Town Attorney

EXHIBIT "A"
Legal Description

SECTION 20, TOWNSHIP 18 SOUTH, RANGE 24 EAST, LAKE COUNTY, FLORIDA

LADY LAKE, LEE & STEVENS ADD LOT 9, 10, 11--LESS E 46 FT—PB 8 PG 11 ORB 1671 PG 823

Property Appraisers Parcel Identification (Folio) Number: 2018241105-000-00900

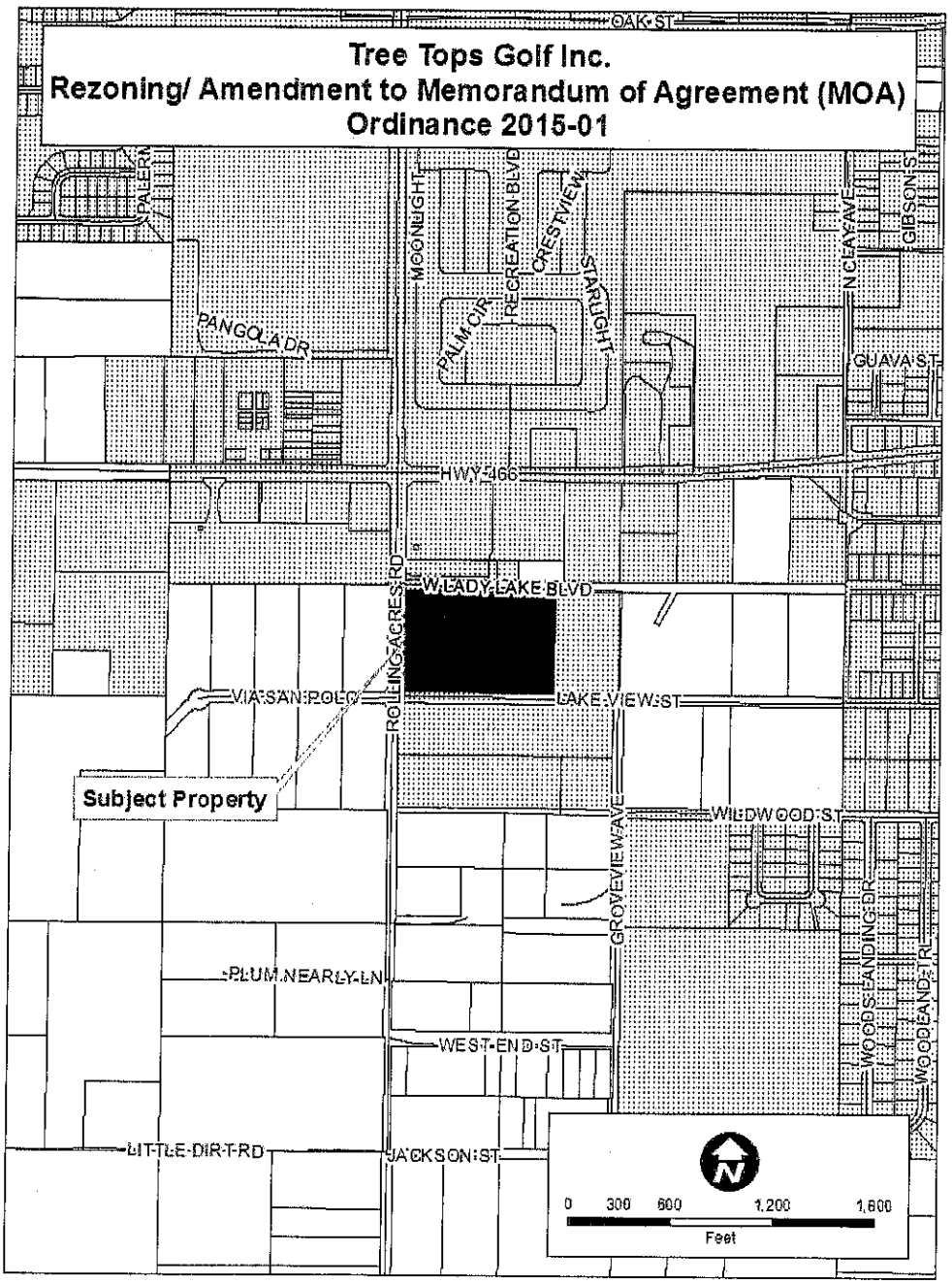

EXHIBIT "B"
MEMORANDUM OF AGREEMENT

This Memorandum of Agreement is dated this ~~18th~~ 16th day of ~~September~~March, ~~2013~~ 2015 between the Town of Lady Lake, Florida (the "Town") and Rolling Acres Self Storage, aka Tree Tops Golf, Inc. ("Property Owner").

RECITALS

1. The Property Owner is the fee simple owner of certain real property in Lady Lake, Florida as described in the legal description attached as Exhibit "A".

2. On September 18, 2013, the Town of Lady Lake and Tree Tops Golf Inc. amended the Memorandum of Agreement to include additional uses as recorded in ORB 4384, Pgs. 886-893.

~~1.~~3. On September 10, 2003, the Town and the owner entered into a Memorandum of Agreement ("MOA") pursuant to the provisions of Chapter 5, Section 4) o) 5) a) 1) of the Town's Land Development regulations.

~~2.~~4. The real property described in the legal description is zoned CP "Planned Commercial" pursuant to the Ordinance No. 98-08, November 2, 1998.

~~3.~~5. The applicant wishes to amend the existing MOA to include additional uses.

~~4.~~6. At this time, the parties wish to enter into an amended Memorandum of Agreement pursuant to the provisions of the Town's Land Development Regulations.

NOW THEREFORE, In recognition of the foregoing, the parties agree to the following terms and conditions as part of the CP zoning for that property described in the attached legal description, Exhibit "A".

1. Permitted Uses.
   Retail Sales & Services, Miniature Golf and associated retail sales and services, Softball Batting Cages, Golf Driving Range, and associated accessory uses, Mini Storage ~~with Manager's residence~~ and office, Manager's Residence, RV Sewage Dump Station, and Indoor Motor Vehicle RV/Boat Storage.

2. Uses Expressly Prohibited. Any and all uses other than those aforementioned as "permitted uses" shall be expressly prohibited.

3. Hours of Operation. The hours of operation shall be as follows:
   A. Open at 7:00 a.m.
   B. Close at 9:00 p.m.

4. Design Standards.
   A. The maximum impervious surface ratio (which includes building coverage) shall be limited to eighty percent (80%).
   B. Maximum building height is thirty-five feet (35') unless adequate fire protection measures are provided.
   C. Setback requirements shall be:
      1. Front Yard Setback – Front Yard to Rolling Acres Road & West Lady Lake Boulevard – Twenty-Five (25) feet minimum
      2. Side Yard Setback: - Five (5) feet minimum
      3. Rear Yard Setback: - Fifteen (15) feet minimum

5. Parking and Accessibility. Parking requirements shall be as required pursuant to Chapter 7 of the Town's Land Development Regulations for the specific use. All parking spaces shall be ten by twenty (10 x 20) feet in size. The required parking on the site shall be comprised of a minimum of ~~59~~ 61 paved parking spaces in conformance with adopted code and as indicated on the site plan. Cross Access Easement to other sites will not be provided based on the nature of the business as a gated mini storage facility operation. The mandatory paving extension of Lady Lake Boulevard shall occur prior to, or concurrent with, the opening of the secondary egress location in Phase II as depicted on the Bubble Plan, and attached hereto as Exhibit "C". The paved access shall comply with all Town road construction standards.

6. Landscaping. The applicant shall utilize the existing natural vegetative (Oak Tree) buffer within the property as shown on the site plan for buffer landscape requirements. At which time the property is redeveloped, a Class "A" Landscape Buffer, ten (10) feet in width, shall be installed pursuant to Chapter 10, Landscaping section of the Land Development Regulations. In addition, the west buffer abutting Rolling Acres Road shall contain a decorative fence; all other buffers shall contain decorative (coated) chain link fencing in addition to the landscaping material.

7. Water Retention Areas. The drainage and stormwater retention requirements of the Town and the appropriate regulatory agencies shall be met and approved by the Town Consulting Engineer. These areas shall be properly maintained by the developer.

8. Lighting. All lighting for the proposed facilities shall be designed and located such that light and/or glare shall be directed upon the subject property only.

9. Potable water & Sanitary Sewer. The property described in Exhibit "A"' shall connect to the Town of Lady Lake's potable water, central sewer, and reclaim/reuse systems at time of commencement of Phase I. All costs associated with design, permitting, engineering, materials, construction and inspections shall be the sole cost of the developer.

10. Development Phases:

A. Phase I: (~~14~~ 8) Mini storage buildings, parking spaces, front parking lot area~~, manager's residence,~~ existing retail building,, dumpster area, and retention ponds.

B. Phase II: (~~12~~ 2) ~~Additional mini storage buildings~~ Additional Indoor Motor Vehicle RV Boat Storage Buildings, ~~&~~ parking spaces, retention pond, ~~and~~ secondary egress drive, managers residence and RV sewage dump station.

~~C. Phase III: (6) Additional mini storage buildings & parking spaces Manager's Residence.~~

Note: The mini golf course, batting cages, and associated accessory uses may continue in operation ~~until that time which Phase III improvements commence.~~ through the entire development build-out.

11. Compliance with All Requirements. Nothing herein shall relieve the Developer or their successors or assigns from obtaining any local, regional, state or federal permits or compliance with any applicable ordinance, laws, rules or regulations necessary for the development of the property.

12. Heirs and Successors. The terms and conditions as set forth in this Memorandum of Agreement shall insure to the benefit of, and shall constitute a covenant running with the land and under the terms, conditions and provisions hereof, and shall be legally binding upon any heirs, assigns and successors in title or interest, and shall be subject to each and every condition herein set out.

13. Recordation. The Memorandum of Agreement shall be recorded in the Public Records of Lake County, Florida.

14. Enforcement. Enforcement of this Memorandum of Agreement shall be through the Town of Lady Lake Town Commission. Upon approval of this agreement, the aforementioned property shall only be used for the purposes described herein. No change in the use, further expansion of the uses, additions to the uses, or additions to the facilities shall be permitted except as approved by formal amendment of this Memorandum of Agreement. Any other proposed use shall be specifically authorized by amendment and approval of the Town of Lady Lake Commission and shall be legally binding upon any heirs, assigns and successors in title or interest.

IN WITNESS WHEREOF, the parties hereto have executed this Agreement on the date first above written.

OWNER

_____

By: _____
Michael Girard

State of Florida
County of Lake

The foregoing instrument was acknowledged before me this ____ day of _____, ~~2013~~ 2015 by _____, Owner of the Property, who is personally known to me or has produced _____ as identification.

_____ My Commission Expires:
Notary Public, State of Florida

TOWN OF LADY LAKE, FLORIDA
LAKE COUNTY, FLORIDA

By: _____
~~James Richards~~Ruth Kussard, Mayor

ATTEST:

_____
Kris Kollgaard, Town Clerk

APPROVED AS TO FORM:

_____
Derek Schroth, Town Attorney

EXHIBIT "C"
BUBBLE PLAN

Tree Tops Golf, Inc.

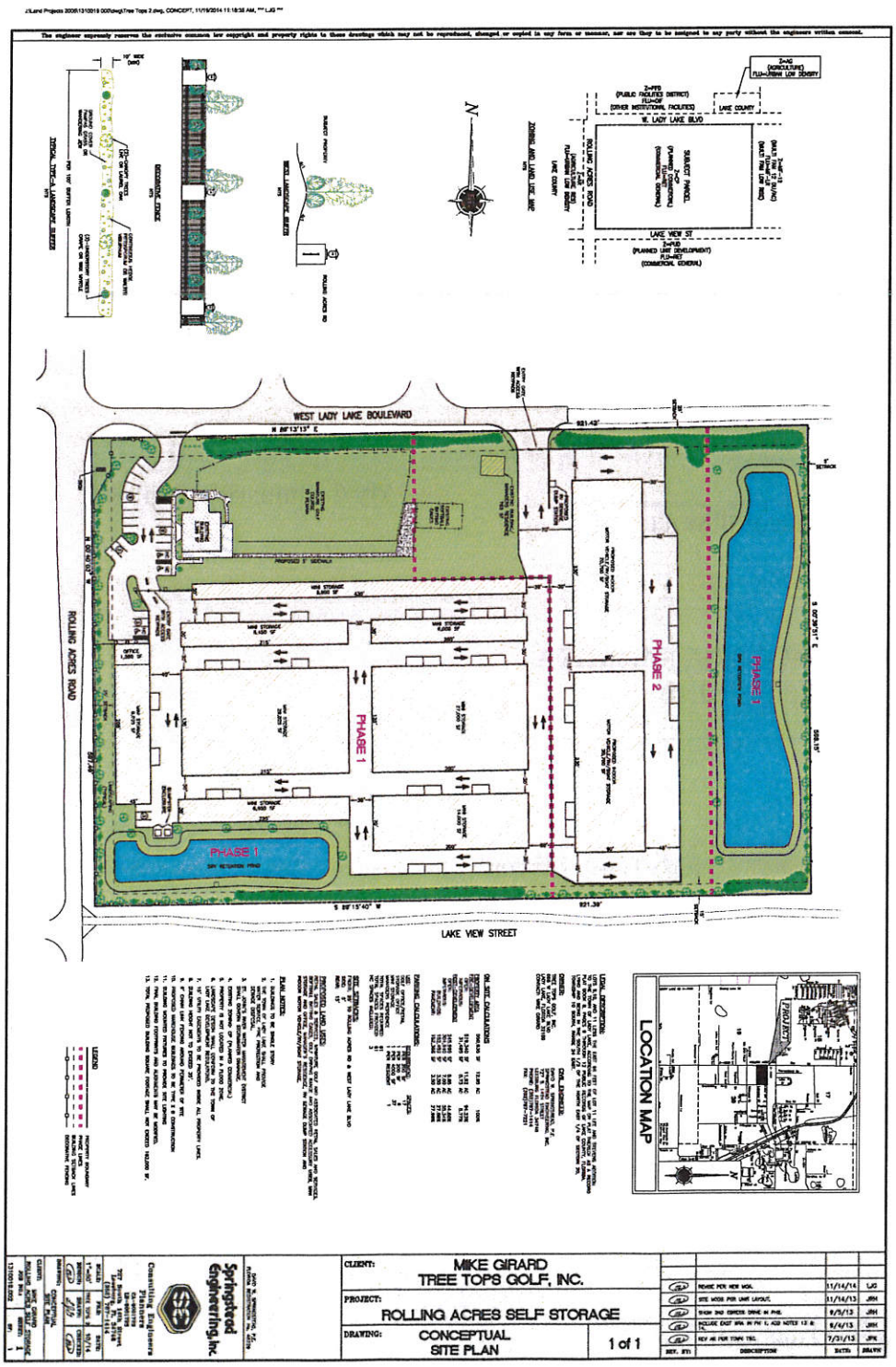

The engineer expressly reserves the exclusive common law copyright and property rights to these drawings which may not be reproduced, changed or copied in any form or manner, nor are they to be assigned to any party without the engineers written consent.

J:\Land Projects 2005\1310019.000\dwg\Tree Tops 2.dwg, CONCEPT, 1/13/2015 2:53:47 PM, ****VL****

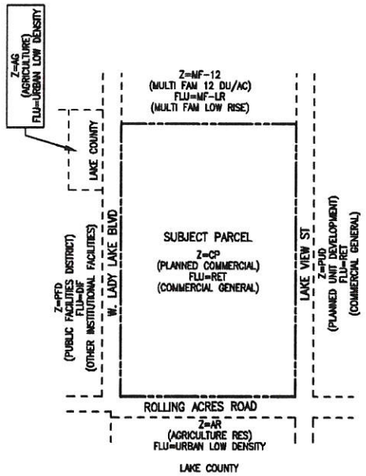

ZONING AND LAND USE MAP
NTS

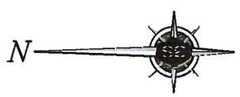

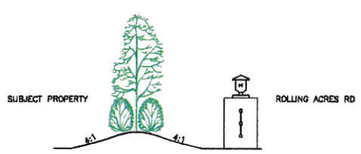

WEST LANDSCAPE BUFFER
NTS

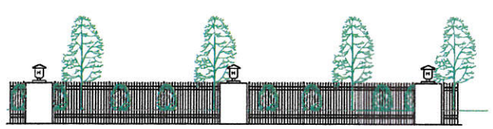

DECORATIVE FENCE
NTS

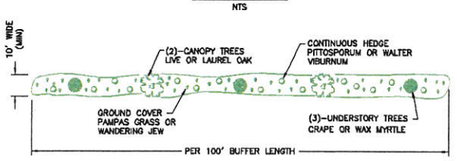

TYPICAL TYPE-A LANDSCAPE BUFFER
NTS

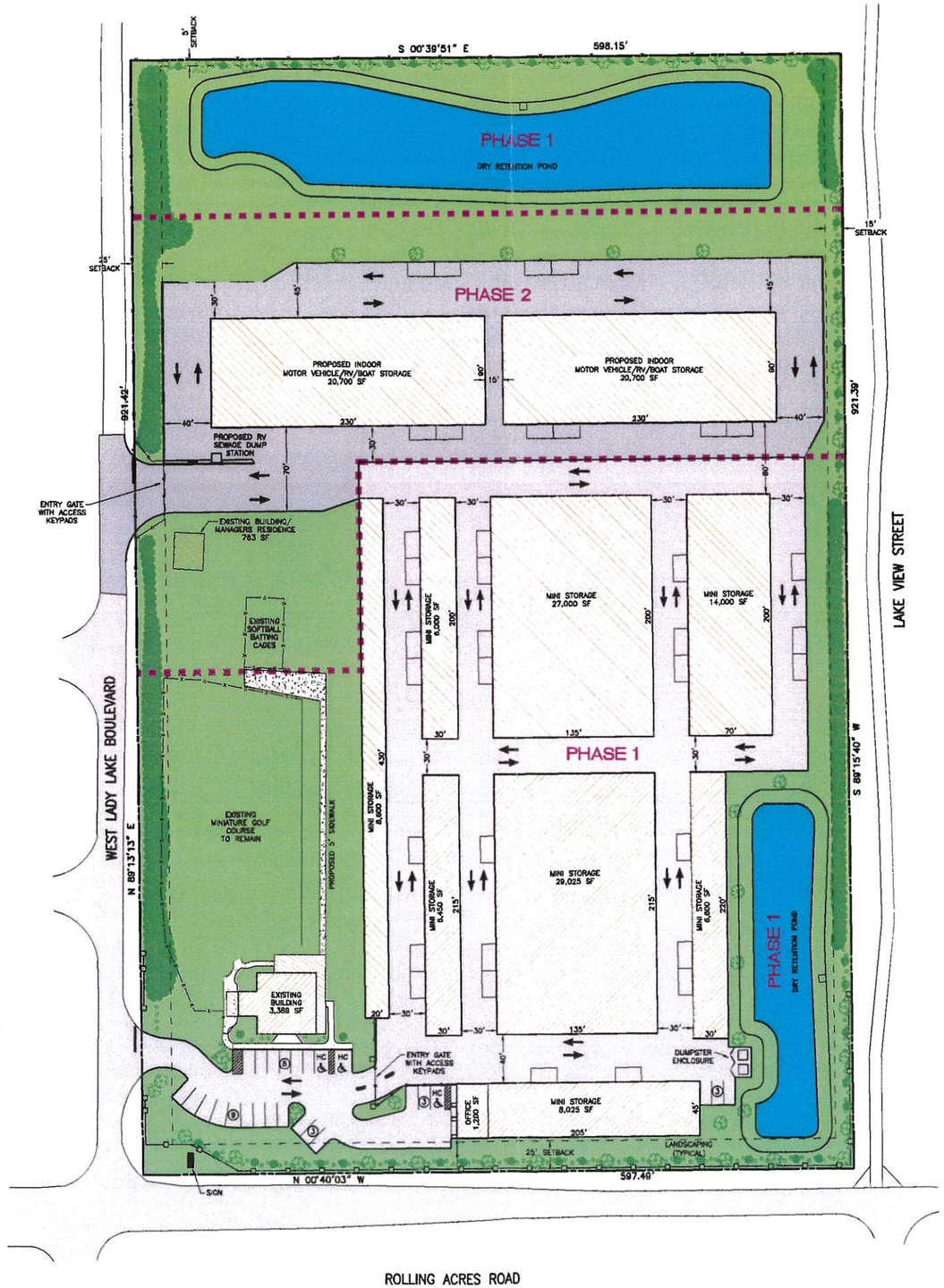

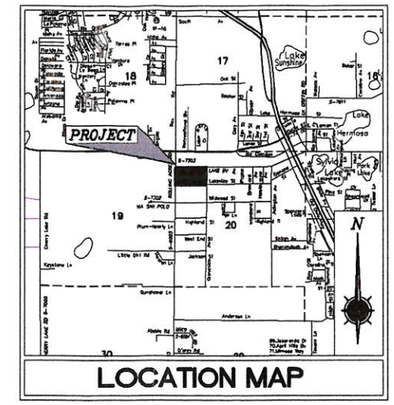

LOCATION MAP

LEGAL DESCRIPTION:

LOTS 9,10, AND 11 LESS THE EAST 88 FEET OF LOT 11 LEE AND STEVENS ADDITION TO THE TOWN OF LADY LAKE, ACCORDING TO THE MAP OR PLAT THEREOF AS A RECORD PLAT BOOK B, PAGES 9 THROUGH 12 PUBLIC RECORDS OF LAKE COUNTY, FLORIDA. LYING AND BEING IN THE SOUTH 1/2 OF THE NORTH EAST 1/4 OF SECTION 20, TOWNSHIP 10 SOUTH, RANGE 24 EAST.

OWNER:
TREE TOPS GOLF, INC.
698 W LADY LAKE BLVD
LADY LAKE, FLORIDA 32159
CONTACT: MIKE GIRARD

CIVIL ENGINEER:
DAVID W. SPRINGSREAD, P.E.
SPRINGSTEAD ENGINEERING, INC.
727 S. 14TH STREET
LEESBURG FLORIDA 34748
PHONE: (352)787-1414
FAX: (352)787-7221

ON SITE CALCULATIONS

PROPERTY AREA	550,835 SF	12.65 AC	100%
PRE-DEVELOPMENT			
OPEN:	519,340 SF	11.92 AC	94.23%
IMPERVIOUS:	31,495 SF	0.73 AC	5.77%
POST-DEVELOPMENT			
OPEN:	245,995 SF	5.65 AC	44.66%
IMPERVIOUS:	304,840 SF	7.00 AC	55.34%
BUILDINGS:	152,452 SF	3.50 AC	27.66%
PAVEMENT:	152,388 SF	3.50 AC	27.66%

PARKING CALCULATIONS:

USE:	REQUIREMENT:	SPACES:
GOLF OFFICE/RETAIL	1 PER 200 SF	17
STORAGE OFFICE	1 PER 200 SF	6
MINI STORAGE	1 PER 4000 SF	37
MANAGERS RESIDENCE	1 PER RESIDENT	1
TOTAL SPACES REQUIRED:	61	
TOTAL SPACES PROVIDED:	61	
HC SPACES INCLUDED:	3	

SITE SETBACKS:
FRONT: 25' TO ROLLING ACRES RD & WEST LADY LAKE BLVD
SIDE: 5'
REAR: 15'

PROPOSED LAND USES:
RETAIL SALES & SERVICES, MINIATURE GOLF AND ASSOCIATED RETAIL SALES AND SERVICES, SOFTBALL BATTING CAGES, GOLF DRIVING RANGE AND ASSOCIATED ACCESSORY USES, MINI STORAGE AND OFFICE, MANAGER'S RESIDENCE, RV SEWAGE DUMP STATION AND INDOOR MOTOR VEHICLE/RV/BOAT STORAGE.

PLAN NOTES:

1. BUILDINGS TO BE SINGLE STORY.
2. THE TOWN OF LADY LAKE SHALL PROVIDE WATER SERVICE, FIRE PROTECTION AND SEWAGE DISPOSAL.
3. ST. JOHN'S RIVER WATER MANAGEMENT DISTRICT SHALL GOVERN STORMWATER DRAINAGE.
4. EXISTING ZONING: CP (PLANNED COMMERCIAL)
5. PROPERTY IS NOT LOCATED IN A FLOOD ZONE.
6. LANDSCAPE DESIGN SHALL CONFORM TO THE TOWN OF LADY LAKE DEVELOPMENT REGULATIONS.
7. 15' UTILITY EASEMENTS TO BE PROVIDED INSIDE ALL PROPERTY LINES.
8. BUILDING HEIGHT NOT TO EXCEED 35'.
9. 6' CHAIN LINK FENCING AROUND PERIMETER OF SITE
10. PROPOSED WAREHOUSE BUILDINGS TO BE TYPE II B CONSTRUCTION
11. BUILDING MOUNTED FIXTURES TO PROVIDE SITE LIGHTING
12. FINAL BUILDING FOOTPRINTS AND ALIGNMENTS MAY BE MODIFIED.
13. TOTAL PROPOSED BUILDING SQUARE FOOTAGE SHALL NOT EXCEED 152,000 SF.

LEGEND

- PROPERTY BOUNDARY
- PHASE LINES
- BUILDING SETBACK LINES
- DECORATIVE FENCING

REV. BY:	DESCRIPTION	DATE:	DRAWN
	REVISE PER NEW MDA.	11/14/14	LJG
	SITE MODS PER UNIT LAYOUT.	11/14/13	JRH
	SHOW 2ND EGRESS DRIVE IN PH2.	9/5/13	JRH
	INCLUDE EAST WBA IN PH 1, ADD NOTES 13 & 14.	9/4/13	JRH
	REV AS PER TOWN TSC.	7/31/13	JPK

CLIENT: MIKE GIRARD
TREE TOPS GOLF, INC.

PROJECT: ROLLING ACRES SELF STORAGE

DRAWING: CONCEPTUAL SITE PLAN

1 of 1

DAVID W. SPRINGSTEAD, P.E.
FLORIDA REGISTRATION No. 48229

Springstead Engineering, Inc.
Consulting Engineers
Planners
CA-0001723
LB-0001723
727 South 14th Street
Leesburg, Fl. 34748
(352) 787-1414

SCALE:	FILE:	DATE:
1"=50'	TREE TOPS 2	10/14
DESIGN:	DRAWN:	CHECKED:

DRAWING: CONCEPTUAL SITE PLAN
CLIENT: MIKE GIRARD
ROLLING ACRES SELF STORAGE

JOB NO.:	SHEET:
1310019.002	1 OF: 1

BOUNDARY & TOPOGRAPHIC SURVEY

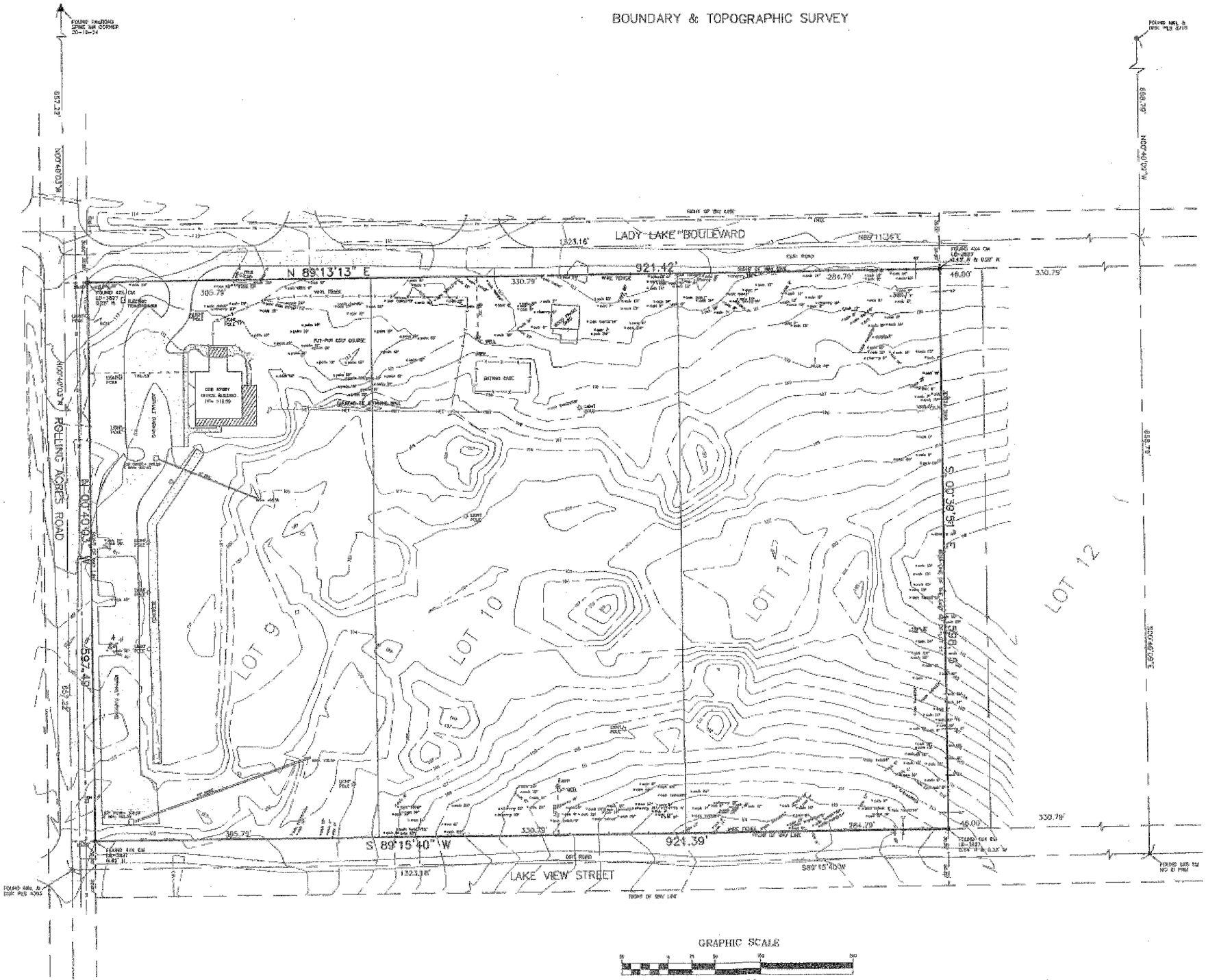

GRAPHIC SCALE

(IN FEET)
1 inch = 50 ft.

DESCRIPTION:

LOTS 9, 10, AND 11, LESS THE EAST 46 FEET OF LOT 11, LYE AND BEING WITHIN THE TOWN OF LADY LAKE, ACCORDING TO THE MAP OF PLAT THEREOF AS RECORDED IN PLAT BOOK 5, PAGES 9 THROUGH 12, PUBLIC RECORDS OF LAKE COUNTY, FLORIDA, LYING AND BEING IN THE SOUTH 1/2 OF THE NORTHWEST 1/4 OF THE NORTHEAST 1/4 OF SECTION 30, TOWNSHIP 19 SOUTH, RANGE 24 EAST.

NOTES:

1) SURVEY WAS COMPLETED ON THE FIELD ON/OR FEB. 20, 2013 AND ACCURATELY REFLECTS FIELD MEASUREMENTS. ALL MEASUREMENTS INCLUDED MEANS ARE FIELD MEASUREMENTS UNLESS OTHERWISE NOTED.

2) THE CORRECTED LOT OF THE LAKE AS DEFINED IN THE ORIGINAL PLAT(ALL DIMENSIONS (0.0167-0.0167) FEET IN PARCEL. THE MINIMUM RELATIVE DISTANCE ALGORITHM FOR THIS TYPE OF BOUNDARY SURVEY IS 0.5 FEET OR 0.0000 FEET.

3) BEARINGS ARE BASED ON AN ASSUMED BEARING AND ARE MEASURED TO THE WEST LINE OF THE NW 1/4 OF SECTION 30, TOWNSHIP 19S, RANGE 24E, AS BEING N. 00°40'03" W.

4) ELEVATIONS SHOWN ARE BASED ON NGVD 1988.

5) ALL UNDERGROUND INTERIOR IMPROVEMENTS AND PUBLIC UTILITIES HAVE NOT BEEN LOCATED AND SHOWN AT THIS TIME.

LEGEND:

CONC = CONCRETE
CM = CONCRETE MONUMENT
ID = IDENTIFICATION
PRM = PERMANENT REFERENCE
BFP = BACK FLOW PREVENTER
FH = FIRE HYDRANT
WM = WATER MAIN
SM = SANITARY SEWER FORCE MAIN

SURVEYORS CERTIFICATION: (HOMEBY CERTIFY TO):

TREE TOPS GOLF

THAT THE BOUNDARY & TOPOGRAPHIC SURVEY, AS PER SUCH DESCRIPTION, WAS PERFORMED UNDER MY RESPONSIBLE SUPERVISION AND DIRECTION AND MEETS THE MINIMUM TECHNICAL STANDARDS AS SET FORTH BY THE FLORIDA BOARD OF SURVEYORS PURSUANT TO SECTION 472.027, FLORIDA STATUTES.

STEVEN SCHREIBER JR. DATE
FLORIDA PROFESSIONAL SURVEYOR & MAPPER
CERTIFICATE NUMBER 5651

WILEY SURVEYING AND MAPPING INC.
11929 CARRISON LANE
UMATILLA, FLORIDA 32784
PHONE (352) 669-6048
(352) 267-2364
WILEYSURVEYINGINC@AOL.COM
PROFESSIONAL SURVEYORS AND MAPPERS

DRAWN BY: SRW	DATE: 03/20/2013
WRITTEN BY: SRW	DRAWING NO: 1
JOB NO: 13-0023	SHEET 1 OF 1

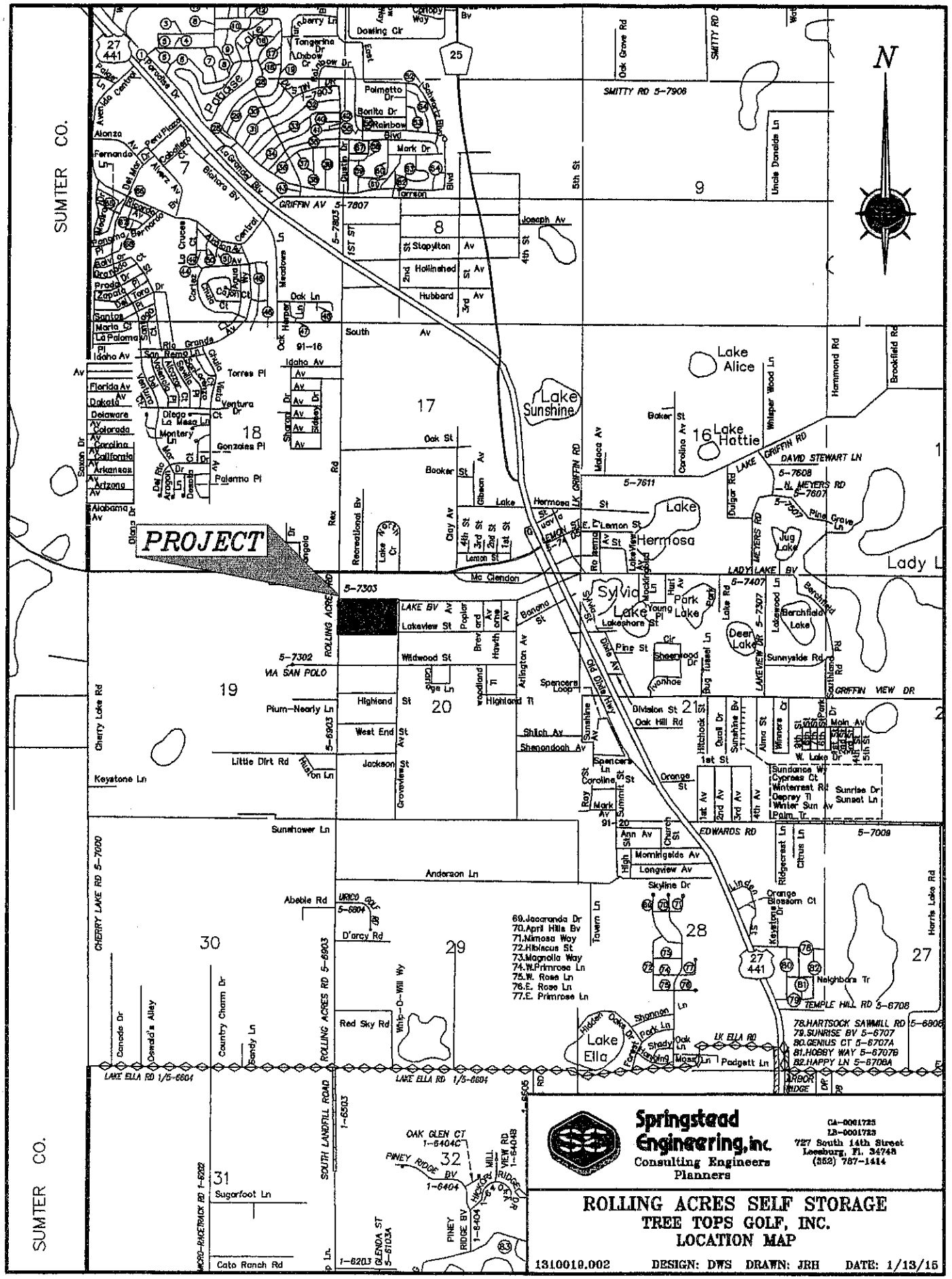

Springstead Engineering, inc.
Consulting Engineers
Planners

CA-0001723
LB-0001723
727 South 14th Street
Leesburg, Fl. 34748
(352) 787-1414

ROLLING ACRES SELF STORAGE
TREE TOPS GOLF, INC.
LOCATION MAP

1310019.002 DESIGN: DWS DRAWN: JRH DATE: 1/13/15

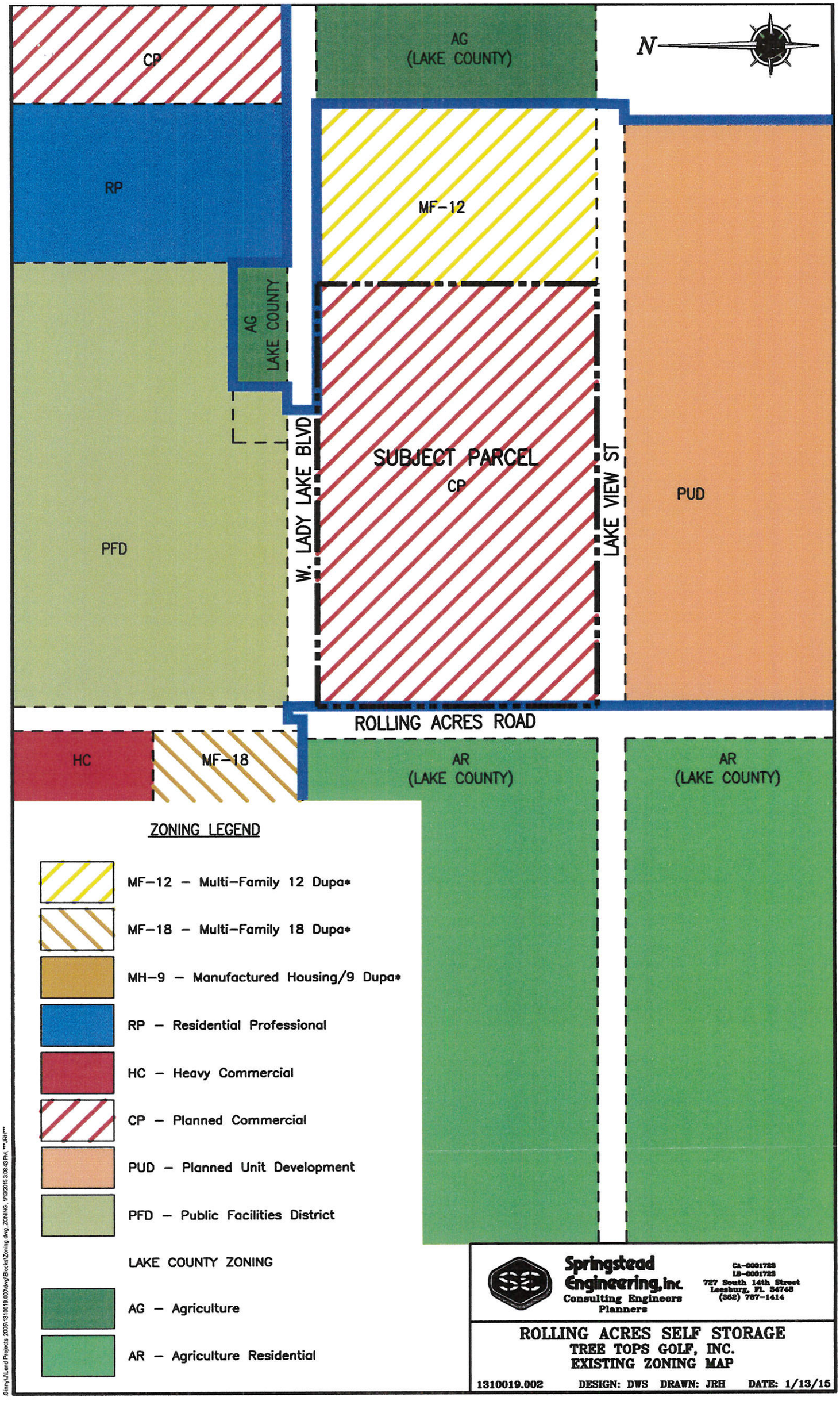
N
CP
AG
(LAKE COUNTY)
RP
MF-12
AG
LAKE COUNTY
SUBJECT PARCEL
CP
W. LADY LAKE BLVD
LAKE VIEW ST
PUD
PFD
ROLLING ACRES ROAD
HC
MF-18
AR
(LAKE COUNTY)
AR
(LAKE COUNTY)
ZONING LEGEND
MF-12 – Multi-Family 12 Dupa*
MF-18 – Multi-Family 18 Dupa*
MH-9 – Manufactured Housing/9 Dupa*
RP – Residential Professional
HC – Heavy Commercial
CP – Planned Commercial
PUD – Planned Unit Development
PFD – Public Facilities District
LAKE COUNTY ZONING
AG – Agriculture
AR – Agriculture Residential
Springstead Engineering, inc.
Consulting Engineers
Planners
CA-0001723
LB-0001723
727 South 14th Street
Leesburg, Fl. 34748
(352) 787-1414
ROLLING ACRES SELF STORAGE
TREE TOPS GOLF, INC.
EXISTING ZONING MAP
1310019.002
DESIGN: DWS
DRAWN: JRH
DATE: 1/13/15

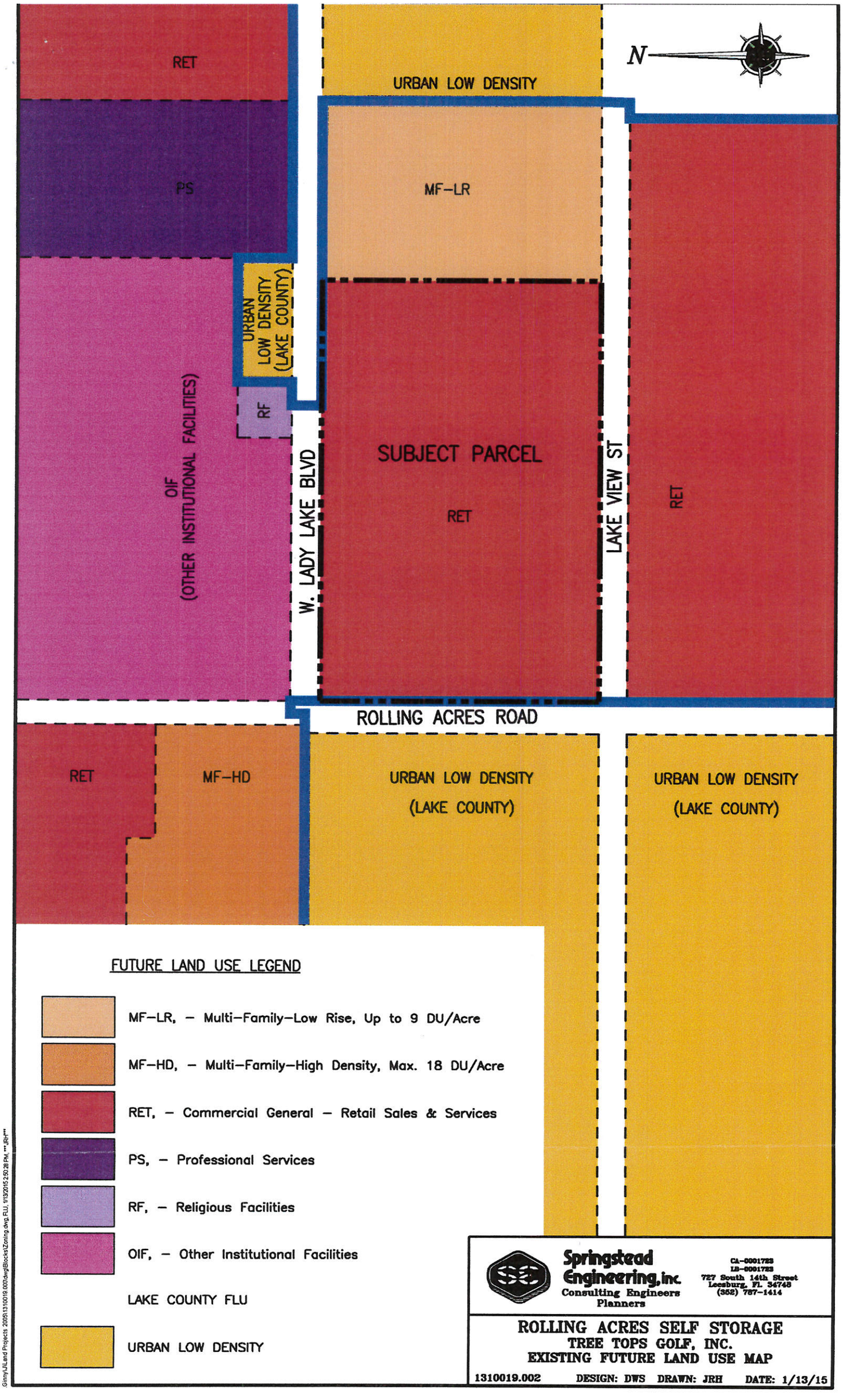
N
RET
URBAN LOW DENSITY
PS
MF-LR
URBAN LOW DENSITY (LAKE COUNTY)
RF
OIF (OTHER INSTITUTIONAL FACILITIES)
W. LADY LAKE BLVD
SUBJECT PARCEL
RET
LAKE VIEW ST
RET
ROLLING ACRES ROAD
RET
MF-HD
URBAN LOW DENSITY (LAKE COUNTY)
URBAN LOW DENSITY (LAKE COUNTY)
FUTURE LAND USE LEGEND
MF-LR, - Multi-Family-Low Rise, Up to 9 DU/Acre
MF-HD, - Multi-Family-High Density, Max. 18 DU/Acre
RET, - Commercial General - Retail Sales & Services
PS, - Professional Services
RF, - Religious Facilities
OIF, - Other Institutional Facilities
LAKE COUNTY FLU
URBAN LOW DENSITY
Springstead Engineering, inc.
Consulting Engineers
Planners
CA-0001723
LB-0001723
727 South 14th Street
Leesburg, Fl. 34748
(352) 787-1414
ROLLING ACRES SELF STORAGE
TREE TOPS GOLF, INC.
EXISTING FUTURE LAND USE MAP
1310019.002
DESIGN: DWS
DRAWN: JRH
DATE: 1/13/15

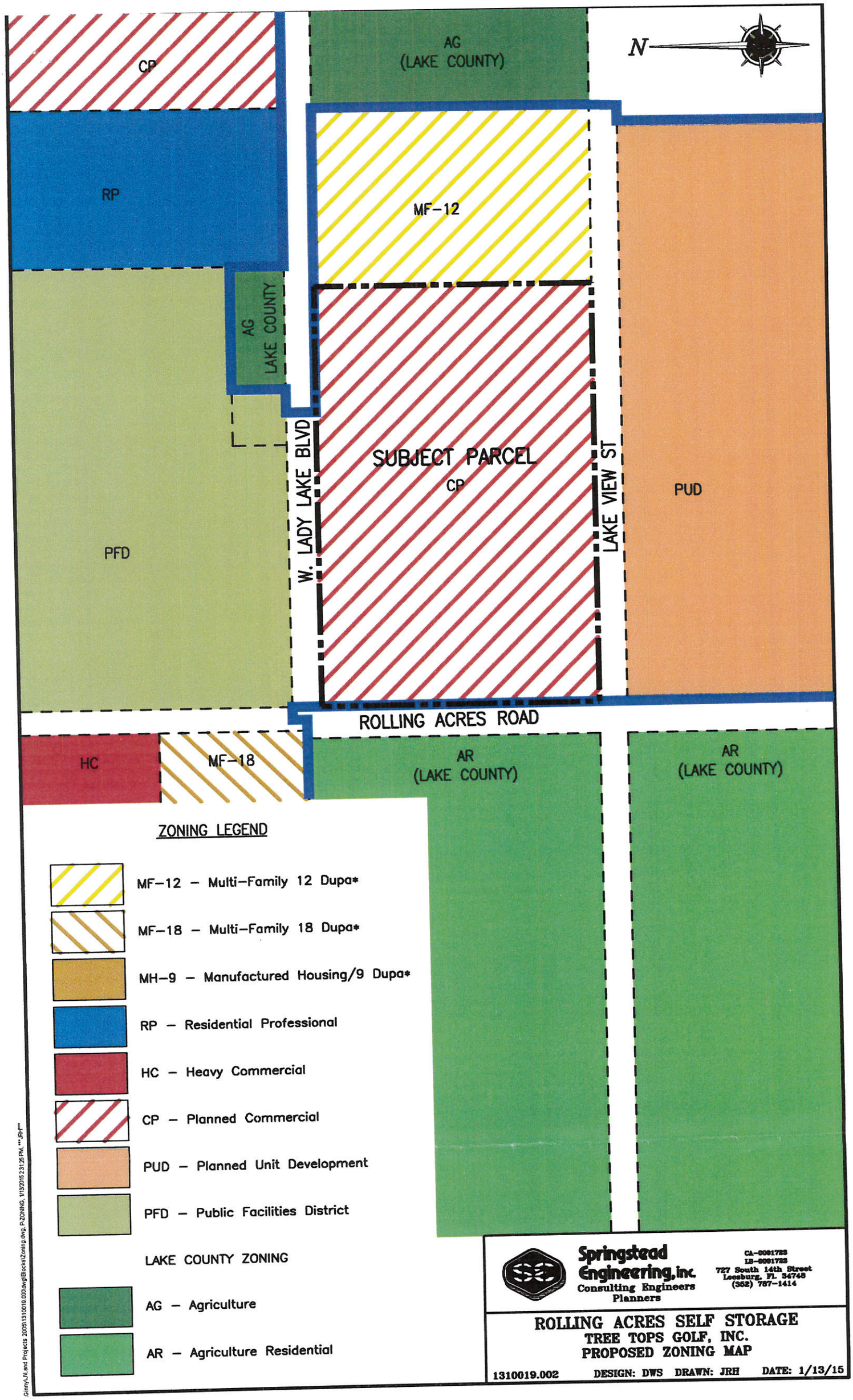

Springstead Engineering, inc.
Consulting Engineers
Planners

CA-0001723
LB-0001723
727 South 14th Street
Leesburg, Fl. 34748
(352) 787-1414

ROLLING ACRES SELF STORAGE
TREE TOPS GOLF, INC.
PROPOSED ZONING MAP

1310019.002 DESIGN: DWS DRAWN: JRH DATE: 1/13/15

G:\my\JL\Land Projects 2005\1310019.002\dwg\Blocks\Zoning.dwg, P-ZONING, 1/13/2015 2:31:25 PM, ***, JRH***

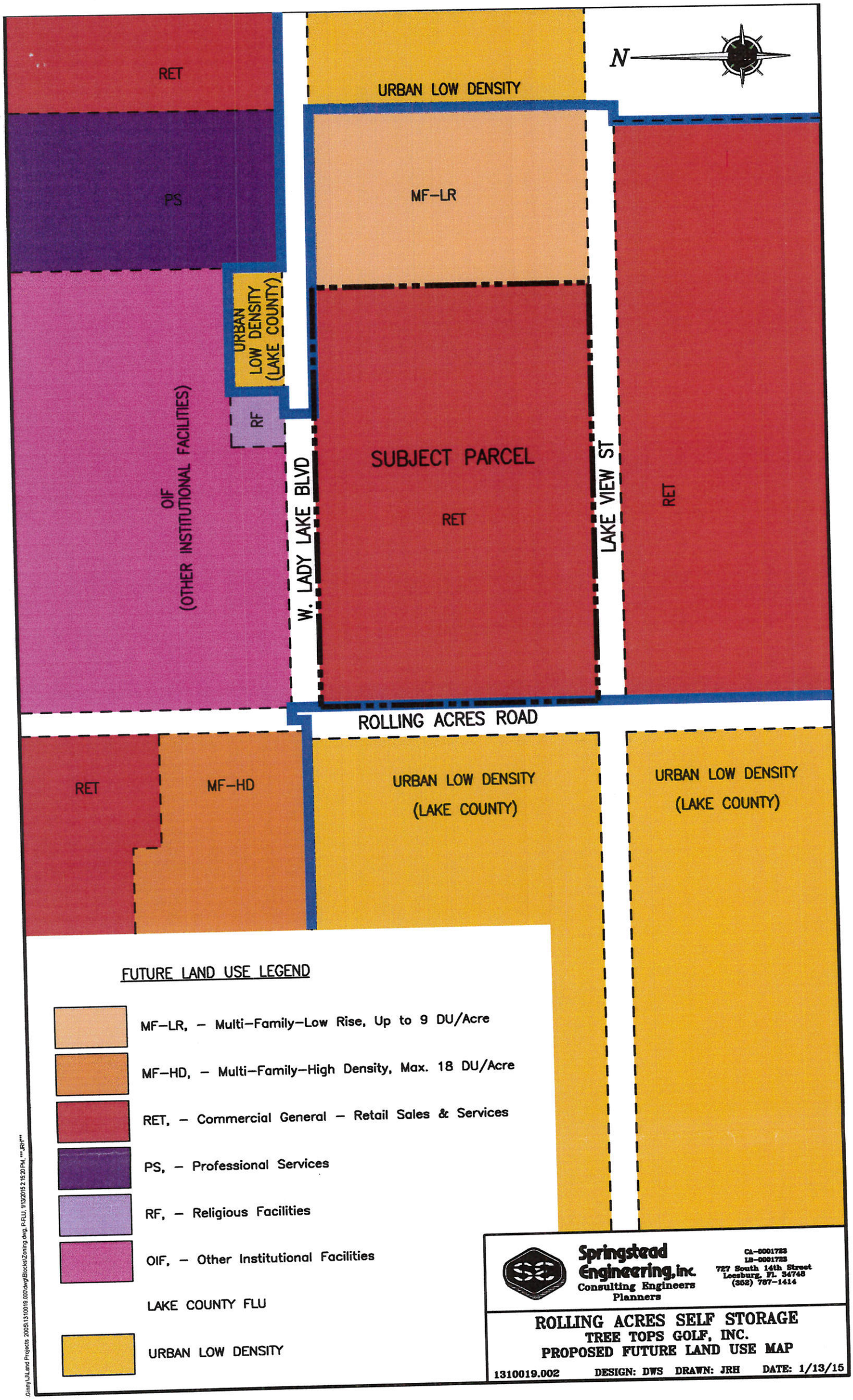
N
RET
URBAN LOW DENSITY
PS
MF-LR
URBAN LOW DENSITY (LAKE COUNTY)
RF
OIF (OTHER INSTITUTIONAL FACILITIES)
W. LADY LAKE BLVD
SUBJECT PARCEL
RET
LAKE VIEW ST
RET
ROLLING ACRES ROAD
RET
MF-HD
URBAN LOW DENSITY (LAKE COUNTY)
URBAN LOW DENSITY (LAKE COUNTY)
FUTURE LAND USE LEGEND
MF-LR, – Multi-Family-Low Rise, Up to 9 DU/Acre
MF-HD, – Multi-Family-High Density, Max. 18 DU/Acre
RET, – Commercial General – Retail Sales & Services
PS, – Professional Services
RF, – Religious Facilities
OIF, – Other Institutional Facilities
LAKE COUNTY FLU
URBAN LOW DENSITY
Springstead Engineering, inc.
Consulting Engineers
Planners
CA-0001723
LB-0001723
727 South 14th Street
Leesburg, Fl. 34748
(352) 787-1414
ROLLING ACRES SELF STORAGE
TREE TOPS GOLF, INC.
PROPOSED FUTURE LAND USE MAP
1310019.002
DESIGN: DWS
DRAWN: JRH
DATE: 1/13/15

PLANTATION CIR
PANGOLA DR
LAKE NORTH CIR
LAKE NORTH CIR
PALM CIR
PALM CIR
MOONLIGHT
RECREATION BLVD
STARLIGHT
N CLAY AVE
HWY 466
S CLAY AVE
MCCLENDON ST
ROLLING ACRES RD
W LADY LAKE BLVD
SUBJECT PROPERTY
VIA SAN POLO
LAKE VIEW ST
GROVEVIEW AVE
WILDWOOD ST
CARRIAGE LN
CARRIAGE LN

LADY
LAKE
REZONING

ROLLING ACRES SELF STORAGE

ROLLING ACRES SELF STORAGE

REZONING PETITION CHECKLIST

PROPERTY OWNER: Rolling Acres Self Storage, aka Tree Tops Golf, inc. (Property Owner)
LEGAL DESCRIPTION: See attached Exhibit "A"
ALTERNATE KEY #: 3250290

APPLICATION/ACCOMPANYING DOCUMENTS	DATE
✓ Received by Growth Management Development Dept.	1/14/15
✓ Application	
✓ Sketch/Survey	
✓ Proof of Ownership	
✓ Owner/Agent Affidavits	
✓ Property Owner's within (150) foot	
✓ Submitted to the ~~Town Clerk's~~ City Office	1/14/15
✓ Fees Paid in the Amount of $ 1650	1/14/15

SCHEDULE MEETING DATES		
✓ Technical Review Committee		N/A
✓ Planning & Zoning Board		2/9/15
✓ Town Commission	1st Reading	3/2/15
	2nd Reading	3/16/15

NOTIFICATIONS	
✓ Notice to Abutting Property Owners	1/22/15
✓ Posting Notices	1/26/15
____ Advertising	

ACTIONS TAKEN

Technical Review Committee:

✓ Approved	
____ Approved with conditions	
____ Disapproved	

Planning & Zoning Board:

____ Approved	
____ Approved with conditions	
____ Disapproved	

Commission:

____ Approved	
____ Approved with conditions	
____ Disapproved	

TOWN OF LADY LAKE
REZONING APPLICATION

Tax identification/AK # 3250290

1. Owner's Name: Rolling Acres Self Storage, aka Tree Tops Golf, Inc. (Property Owner)

   Mailing Address: 698 W. Lady Lake Boulevard, Lady Lake, Florida 32159

   Telephone #: (352) 259-2313

2. Applicant's Name: Michael or Joy Girard

   Mailing Address: 698 W. Lady Lake Boulevard, Lady Lake, Florida 32159

   Telephone #: (352) 259-2313

3. Applicant is: Owner x Agent ___ Purchaser ___ Lessee ___ Optionee ___

4. Property Address/Location: 175 South Rolling Acres Road, Lady Lake, Florida 32159

5. Legal Description of Property to be rezoned: Lady Lake, Lee & Stevens Add Lot 9, 10, 11--Less E 46 Ft-PB 8 PG 11/ORB 1671 Pg 823.

7. The property is located in the vicinity of the following streets:
   Rolling Acres Road and West Lady Lake Boulevard

7. Area of Property: 550,835 Square feet 12.65 Acres

8. Utilities: Central Water x Central Sewer x Well x Septic Tank___

9. Existing zoning of property: CP

10. Requested zoning of property: CP

    Note: If the requested zoning is a Planned Unit Development (PUD), indicate type: ____ Residential, ___ Commercial, ____ Industrial, ____ Mixed Use, and refer to the requirements of the preliminary development plan and see Chapter ____ of the LDR Code. If the rezoning is to Manufactured Homes High Density (MH-9), a Master Park Plan shall be submitted.

11. Number, square footage and present use of the existing structures on the property;
    (1) 3,400 sf Retail Shop/Business Office (8) Mini Storage Buildings totalling 105,700 sf.
    (1) 763 sf Equipment Storage Building

12. Proposed use the property: Retail Sales & Services, Miniature Golf and associated retail sales and services, Softball Batting Cages, Golf Driving Range, and associated accessory uses, Mini Storage and office, Manager's Residence, RV Sewage Dump Station, and Indoor Motor Vehicle/RV/Boat Storage.

13. Has any land use application been file within last year in connection with this property? x Yes ____No. If yes, briefly describe the nature of the request:
    Added mini storage and manager's residence uses in the MOA.

EXHIBIT "A"

LEGAL DESCRIPTION

SECTION 20, TOWNSHIP 18 SOUTH, RANGE 24 EAST, LAKE COUNTY, FLORIDA DESCRIBED AS FOLLOWS: LADY LAKE, LEE & STEVENS ADD LOT 9, 10, 11-LESS E 46 FT-ORB 1671 PG 823.

TREE TOPS GOLF INC 175 SOUTH ROLLING ACRES RD LADY LAKE, FL 32159	20-18-24-110500000900	3250290

ADJACENT PROPERTY OWNERS

OWNER/ADDRESS	PARCEL ID	ALTERNATE KEY
T LOVELL ALPHA LP 38700 ROLLING ACRES RD LADY LAKE, FL 32159	20-18-24-110500002100	1454735
MEUCCI LOUIS TRUSTEE 940 VIA SAN POLO LADY LAKE, FL 32159	19-18-24-100000000100	3392264
BONNIE PATTI J & 839 VIA SAN POLO LADY LAKE, FL 32159	19-18-24-100000001000	3392370
SOUTHERN ROLLING ACRES LLC 824 COUNTY ROAD 466 LADY LAKE, FL 32159	19-18-24-000100000101	1800609
VETERANS MEMORIAL POST 347 LADY LAKE, FL 32159	20-18-24-010100000200	3861853
LAKE COUNTY/SOLID WASTE WEST LADY LAKE BLVD LADY LAKE, FL 32159	20-18-24-010100000100	1610940
CHURCH OF ST ALBANS INC LADY LAKE, FL 32159	20-18-24-010100001100	1610958
EDWARDS PAUL H JR 1131 LADY LAKE BLVD LADY LAKE, FL 32159	20-18-24-010000001300	1417414
LADY LAKE MANAGEMENT GROUP INC LADY LAKE, FL 32159	20-18-24-110500001100	3250281
LADY LAKE MANAGEMENT GROUP INC 1210 COUNTY ROAD 466 LADY LAKE, FL 32159	20-18-24-110500000500	3792796

PROPERTY RECORD CARD

General Information

Owner Name:	TREE TOPS STORAGE HOLDING LLC	**Alternate Key:**	3250290
Mailing Address:	175 S ROLLING ACRES RD LADY LAKE, FL 32159 *Update Mailing Address*	**Parcel Number:**	20-18-24-110500000900
		Millage Group and City:	00LL (Lady Lake)
		Total Millage Rate:	19.04670
		Trash/Recycling /Water/Info:	*My Public Services Map*
Property Location:	175 SOUTH ROLLING ACRES RD LADY LAKE FL 32159 *Update Property Location*	**Property Name:**	MINI GOLF & MINI SELF STORAGE *Submit Property Name*
		School Locator:	*School and Bus Map*
Property Description:	LADY LAKE, LEE & STEVENS ADD LOT 9, 10, 11--LESS E 46 FT--PB| 8 PG 11 | ORB 4544 PG 885 |		

Land Data

Line	Land Use	Frontage	Depth	Notes	No. Units	Type	Class Value	Land Value
1	GOLF COURSES (3800)	0	0		13.64	AC	$0.00	$545,054.00

Commercial Building(s)

Building 1

Commercial	Building Value: $138,697.00

Summary

Year Built:	1999
Total Square Footage:	2800
Full Bathrooms:	1
Half Bathrooms:	2
Elevators:	0
Elevator Landings:	0
Escalators:	0

Section(s)

Section No.	Section Type	Wall Height	No. Stories	Ground Floor Area	Basement	Basement Finished	Map Color
1	FINISHED LIVING AREA (FLA)	11	1	2500	0%	0%	

Interior Finish	Percent	Sprinkler	A/C
(11C)	100.00 %	No	Yes

2	FINISHED LIVING AREA (FLA)	11	1	300	0%	0%	

Residential Units: 0

Kitchens: 0

Fireplaces: 0

Structure Type: Wood or Steel Open Stud Frame

Exterior Walls:

06 : 100.00 %

Interior Finish	Percent	Sprinkler	A/C
(11C)	100.00 %	No	Yes

Miscellaneous Improvements

No.	Type	No. Units	Unit Type	Year	Depreciated Value
0001	PARKING LOT LIGHT FIXTURE (PFL)	8	UT	2000	$5,191.00
0002	PARKING LOT LIGHT FIXTURE (PFL)	3	UT	2000	$1,168.00
0003	PAVING (PAV)	8616	SF	2000	$6,979.00
0004	PAVING (PAV)	746	SF	2000	$1,045.00
0005	GARAGE DETACHED (DGF)	720	SF	2003	$6,426.00
0006	PAVING (PAV)	2500	SF	2005	$5,040.00

Sales History

O.R. Book / Page	Sale Date	Instrument	Q/U	Vac./Imp.	Sale Price
1671 / 823	12/18/1998	WD	Q	V	$102,900.00
4544 / 885	10/2/2014	WD	U	I	$1,900,000.00

Values and Estimated Taxes

Tax Authority	Just Value	Assessed Value	Taxable Value	Millage	Estimated Taxes
LAKE COUNTY BCC	$709,600	$709,600	$709,600	5.38560	$3,821.62
LAKE COUNTY MSTU AMBULANCE	$709,600	$709,600	$709,600	0.46290	$328.47
LAKE COUNTY MSTU FIRE	$709,600	$709,600	$709,600	0.47040	$333.80

SCHOOL BOARD STATE	$709,600	$709,600	$709,600	5.74600	$4,077.36
SCHOOL BOARD LOCAL	$709,600	$709,600	$709,600	1.50000	$1,064.40
TOWN OF LADY LAKE	$709,600	$709,600	$709,600	3.75000	$2,661.00
ST JOHNS RIVER FL WATER MGMT DIST	$709,600	$709,600	$709,600	0.31640	$224.52
LAKE COUNTY VOTED DEBT SERVICE	$709,600	$709,600	$709,600	0.16000	$113.54
LAKE COUNTY WATER AUTHORITY	$709,600	$709,600	$709,600	0.25540	$181.23
NORTH LAKE HOSPITAL DIST	$709,600	$709,600	$709,600	1.00000	$709.60
				Total: 19.0467	**Total:** $13,515.54

The values displayed above may NOT reflect certified values and therefore are subject to change before being finalized for ad valorem assessment purposes. The estimated tax totals are based on prior year adopted millage rates until each taxing authority certifies proposed rates (annually in mid-August) and adopts final millage rates (late September) of each year. Estimated tax totals do not reflect non-ad valorem assessments. (Fire Fees, Solid Waste, etc.) Please consult the Tax Collector for actual taxation amounts.

Copyright © 2014 Lake County Property Appraiser. All rights reserved.
Property data last updated on 25 January 2015.

Municipal Complex, 409 Fennell Boulevard, Lady Lake, Florida 32159 USA

352-751-1500 FAX 352-751-1510 www.ladylake.org

January 22, 2015

RE: Ordinance #2015-01 – Rezoning/Amendment to the Memorandum of Agreement

Dear Property Owner:

Applicant, Michael or Joy Girard, has submitted an application on behalf of Tree Tops Golf Inc., for property located at the corner of West Lady Lake Blvd. and Rolling Acres Road, 175 South Rolling Acres Road, known as the Rolling Acres Storage Facility. The property includes approximately 12.58± acres (referenced by alternate key number 3250290) in Section 20, Township 18 South, Range 24 East, currently in the Town of Lady Lake, Florida.

Pursuant to the provisions of the Town of Lady Lake Land Development Regulations, the applicant is requesting to amend the Memorandum of Agreement (MOA)/Ordinance terms (Exhibit "B") and Bubble Plan (Exhibit "C") with the following changes: to reduce the overall square footage of the development by 9,548 feet; to amend the number and size of buildings to be constructed; to remove Phase III from the project; to construct a manager's residence in Phase II; and to add the additional uses of RV Sewage Dump Station, and Indoor Motor Vehicle/RV/Boat Storage as permissible operations on the property. The zoning classification will remain Planned Commercial (CP) for the parcel. The petitions are scheduled for the following public hearing dates:

PLANNING AND ZONING BOARD	Monday, February 9, 2015, at 5:30 p.m.
COMMISSION MEETING (1st Reading)	Monday, March 2, 2015, at 6:00 p.m.
COMMISSION MEETING (2nd Reading)	Monday, March 16, 2015, at 6:00 p.m.

You are invited to attend these public hearings to be held in the Town Hall Commission Chambers, 409 Fennell Boulevard, Lady Lake, Florida. The petitions may be inspected at Town Hall during regular business hours (7:30 a.m. to 6 p.m., Monday - Thursday) in the Growth Management Department. Any person wishing to appeal a decision of this public body should ensure themselves that a verbatim record of the proceedings is made. If you have any questions regarding this matter, please call me at (352) 751-1521 or via email at tcarroll@ladylake.org.

Sincerely,

Thad Carroll, AICP
Growth Management Director

Legal Description

SECTION 20, TOWNSHIP 18 SOUTH, RANGE 24 EAST, LAKE COUNTY, FLORIDA

LADY LAKE, LEE & STEVENS ADD LOT 9, 10, 11--LESS E 46 FT—PB 8 PG 11
ORB 1671 PG 823

Property Appraisers Parcel Identification (Folio) Number: 2018241105-000-00900

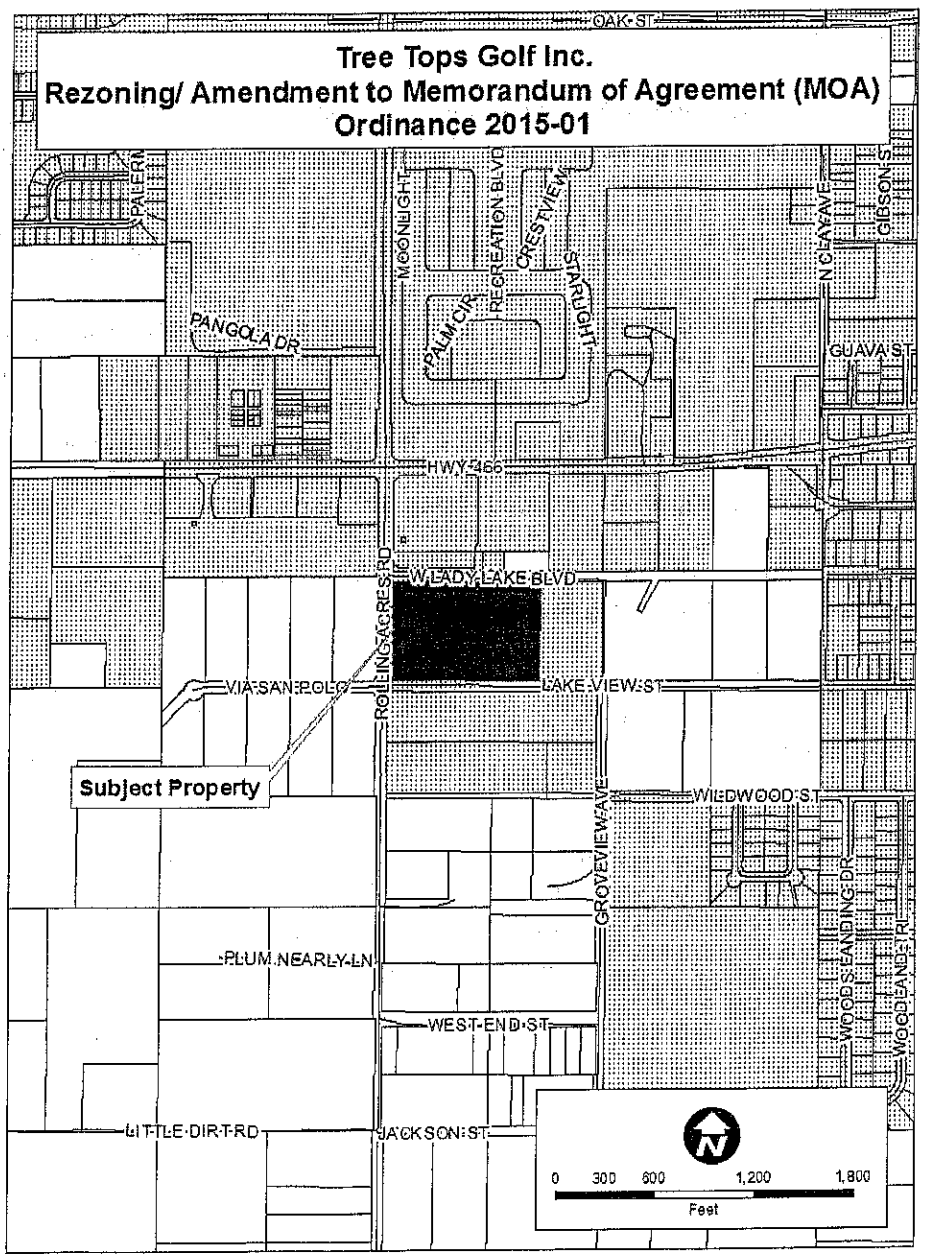

~~Architectural Design Style in conjunction with the existing exterior elevations of the buildings in Lady Lake Crossings and the Villages Crossroad Plaza. Any landscaping waivers will be brought before the Parks, Recreation, and Tree Advisory Committee, and any commercial landscaping waivers will be brought before the Town Commission for final consideration.~~

~~Mr. Carroll introduced Martin Dellebovi of Benchmark to talk about this proposal.~~

~~Mr. Dellebovi stated that Benchmark feels that Steinmart will be a great addition to this retail space. He stated that Kohl's and Bed, Bath & Beyond have waived the restrictions to allow this. He stated that Steinmart will use 32,000 sq. ft. of the retail space and there will be 20,000 sq. ft. of additional retail space available adjacent to them, although there are no signed leases for this space yet, which may either be one or two store fronts. He stated there will be a minor modification to the St. John's permit and Kimley-Horn will be updating all the engineering for the infrastructure currently in place, as well as the site conditions and traffic impact. Mr. Dellebovi stated the elevations proposed are consistent with the current theme of the elevations for Village Crossroads and Lady Lake Crossing. He stated that Steinmart is interested in putting a sign on the left side elevation of the building because of the traffic coming down from the bridge into Lady Lake, and this will be brought back before the Commission at a later date.~~

~~Mr. Dellebovi stated that they will be building a retail building on the outparcel near McDonald's, although there is no tenant currently in place, and the elevation will match the elevation themes of the outparcel where the Vitamin Shoppe and Aspen Dental are with awnings, etc. He stated the landscaping and lighting will also remain consistent throughout the parcels, which has done very well from the Village Crossroads to Lady Lake Crossing. Mr. Dellebovi stated that the signage for Steinmart and any other tenants will be going on the pylon sign at the corner by McDonald's. He asked if there were any questions.~~

~~Commissioner Hannan asked if there would be additional signs on the Tire Kingdom sign. He also mentioned that the developer agreed in the past to pull that sign down if the overpass is torn down.~~

~~Commissioner Richards commented that the bridge is slated to come down in 2019.~~

~~Mr. Dellebovi stated that there are currently two signs, the one by McDonald's and the one by Tire Kingdom, and he confirmed that they would take it down if the overpass comes down.~~

~~***It was the consensus of the Commission that they were in favor of advancement of the conceptual presentation of Lady Lake Crossings East as presented.***~~

6. <u>Conceptual Presentation of Changes for Rolling Acres Self Storage (Tree Tops) – Proposal for a Manager's Residence in Phase 2 in an Existing Building Near the Secondary Egress Drive on West Lady Lake Blvd.; Proposal to Change the Planned 12 Mini-Storage Buildings Totaling 41,000 Sq. Ft. to Two Proposed Indoor Motor Vehicle/RV/Boat Storage Buildings Totaling Same; Proposal for an RV Sewage Dump Station Approximately 40' Inside the Gate at the Secondary Egress Drive; and Cancellation of Proposed Phase 3 of the Project (Thad Carroll)</u>

Growth Management Director Thad Carroll gave the background summary from the agenda item cover sheet which is on file in the Town Clerk's office. He stated that on December 16, 2013, Tree Tops Golf Inc., received site plan approval for the construction of a development consisting of three phases with 32 buildings on a 12.65-acre parcel located at 175 S. Rolling Acres Road (referenced

by Alternate Key # 3250290). He stated the Development Order for the first phase of MJSP 10/13-003 was issued on December 17, 2014, consisting of eight buildings being 110,289 sq. ft. of mini-storage space.

Mr. Carroll stated the Memorandum of Agreement of Ordinance No. 2013-10 was approved for the property by the Town Commission on September 18, 2013 (Ordinance No. 2013-10 with MOA attached). He stated that at this time, the applicant is seeking to amend the Memorandum of Agreement to propose the following changes:

- A manager's residence was not constructed in Phase 1. This is now proposed in Phase 2 in an existing building near the secondary egress drive on West Lady Lake Boulevard, approximately 763 sq. ft. in size.

- Phase 2 changes the originally planned 12 mini storage buildings totaling 41,000 sq. ft. to two proposed Indoor Motor Vehicle/RV/Boat Storage Buildings totaling same.

- Phase 2 includes a proposed RV sewage dump station approximately 40' inside the gate at the secondary egress drive.

- Phase 3 is no longer proposed. Six mini storage buildings will not be planned in Phase 3.

Mr. Carroll summarized that a total of 152,452 sq. ft. of buildings is now planned for the site with a net reduction of 9,548 sq. ft. from the originally approved development; the originally approved building coverage on-site was 162,000 sq. ft.

Mr. Carroll reviewed the site plans as originally proposed and the revised plans for the changes being proposed today.

The Future Land Use Map designation for the site is Commercial General-Retail Sales & Services (RET) and property is zoned Planned Commercial (CP). The proposed changes are consistent with the directives of the Comprehensive Plan and zoning classification, provided that the amendments are incorporated and adopted under a revised Memorandum of Agreement.

The applicant has submitted a summary of proposed modifications; which is contained within the packet, along with the following items:

- Approved Ordinance No. 2010-13 with Memorandum of Agreement
- Proposed changes to the Memorandum of Agreement
- Proposed Conceptual Plan to accompany MOA (in color)
- Approved and proposed Site Plans 24" x 36" in black & white
- Executed Development Order for Phase I

Mr. Carroll turned the presentation over to Mr. David Springstead of Springstead Engineering, as project engineer, to review the proposed changes.

Mr. Springstead stated he represents Tree Tops/Rolling Acres Mini-Storage. He stated the manager's residence proposed in Phase 1 in the front building was made into mini storage units instead, and they are proposing that the current storage shed by the back entrance be renovated into a manager's residence. He stated the two proposed indoor storage buildings instead of the 12 unit mini storage buildings would be designed to meet the building codes for restrooms, fire protection

and alarm systems, as these were issues that popped up during the first phase. Mr. Springstead commented that the proposed driveways are wide enough for two-way traffic all around and allow for backing into the facilities. He stated the idea for the RV storage and dump station is that it would be a self-contained site to allow for clean-out and storage, and there would be a second connection to the Town's sewer system to allow for a small lift station to insure that the flow for the dump station would not effect the plant's operation.

Mayor Kussard clarified that the site would not have its own stand-alone system, but would hook up to the Town's system, and that samples could be taken to insure that nothing that should not be going into the system would go into it.

Mr. Springstead confirmed this and stated the lift station could provide a sample if need be. He stated that the site drainage has already been designed to meet the same amount of impervious area that was previously proposed, although there will be a slight modification to the St. John's permit for the piping and transmission. Mr. Springstead stated that Lady Lake Boulevard will be paved down past the second entrance in this phase, and that the entrance will be a gated access that will be coded and monitored closely.

It was the consensus of the Commission that they were in favor of advancement of the proposed changes for Rolling Acres Self Storage (Tree Tops) as presented.

7. ADJOURN: There being no further discussion; the meeting was adjourned at 5:16 p.m.

Kristen Kollgaard, Town Clerk

Ruth Kussard, Mayor

Minutes transcribed by Nancy Slaton, Deputy Town Clerk

TECHNICAL REVIEW COMMITTEE COMMENTS
FIRST/FINAL REVIEW 01/28/15

Project: **Ordinance 2015-01**
Proposal: **Rezoning/ Amendment to the Memorandum of Agreement for the Rolling Acres Self Storage Facility (Tree Tops Golf, Inc.)**

Description:

Applicant, Michael or Joy Girard, has submitted an application on behalf of Rolling Acres Self Storage (a.k.a. Tree Tops Golf, Inc.) for property located at the corner of West Lady Lake Boulevard and Rolling Acres Road – addressed at 175 S. Rolling Acres. The property includes approximately 12.65 ± acres (referenced by Alternate Key Number 3250290) currently in the Town of Lady Lake. The application and proposed ordinance where provided to the TRC members for review.

Following submittal of any required revisions and responses, correspondence will be forwarded indicating the proposal's status, either: (1) requiring additional revision or documentations; or (2) ready for approval. Site plans are subject to public hearing, as well as plats, annexation requests, zoning requests, and comprehensive plan requests. When applicable, you will receive written notification that the item is scheduled for review by the Planning and Zoning Board or Town Commission. For additional information, contact Thad Carroll at (352) 751-1521.

GROWTH MANAGEMENT

Questions may be directed to Wendy Then, at wthen@ladylake.org

1. Ordinance was prepared by Growth Management, no comments concerning the Ordinance as prepared.

POLICE

Questions may be directed to Chief Chris McKinstry at cmckinstry@ladylake.org

1. No comments at this time from the Police Dept.

FIRE

1. Review non-applicable for this ordinance, review will be conducted on the site plan and building plans.

BUILDING

Questions may be directed to Dallas Foss, Building Official at dfoss@usanova.com.

1. No comments at this time by the Building Official.

PUBLIC WORKS

Questions may be directed to Butch Goodman, Utilities Supervisor at bgoodman@ladylakepw.org

1. The Original Utility Agreement will need to be Amended to include any additional Water Sewer and Reuse E.R.Us the amendment will also need to address Flow Amount= Gallons Per Day and Waste water strength by allowing for Metering and Sampling by the Town at the proposed dumping station in addition the Original Engineers allocation letter for E.R.Us will need to be revised and resubmitted addressing the additional Water Sewer and Reuse E.R.Us needed? for the proposed modifications?

LAKE-SUMTER MPO

1. Review non-applicable for this resolution.

PLANNING & ZONING BOARD AGENDA ITEM

REQUESTED BOARD MEETING DATE: February 9, 2015

SUBJECT: **Ordinance 2015-01 – Rolling Acres Self Storage Facility (Tree Tops Golf, Inc.) Located at the Corner of West Lady Lake Blvd. and Rolling Acres Road at 175 S. Rolling Acres Road - Providing for a Modification of the Town of Lady Lake Planned Commercial (CP) Zoning Memorandum of Agreement (MOA). (Alternate Key #3250290)**

DEPARTMENT: **GROWTH MANAGEMENT**

RECOMMENDED MOTIONS:

1. **Motion to forward Ordinance 2015-01 to the Town Commission with the Recommendation of Approval.**

2. **Motion to forward Ordinance 2015-01 to the Town Commission with the Recommendation of Denial.**

   Staff supports the motion to forward Ordinance 2015-01 with the Recommendation of Approval.

Applicant, Michael or Joy Girard, has submitted an application on behalf of Rolling Acres Self Storage (a.k.a. Tree Tops Golf, Inc.) for property located at the corner of West Lady Lake Boulevard and Rolling Acres Road – addressed at 175 S. Rolling Acres. The property includes approximately 12.65 ± acres (referenced by Alternate Key Number 3250290) currently in the Town of Lady Lake.

The subject property is currently operating as a Self-Storage Facility consisting of eight (8) buildings providing 109,700 square feet of storage space. There is also now a 1,200 square foot office in addition to the original office building of 3,389 square feet. There is also a miniature golf course and batting cages in operation on the property, as well as an existing building of 763 square feet to be converted to a manager's residence. Pursuant to the provisions of the Town of Lady Lake Land Development Regulations, the applicant is requesting to modify the Memorandum of Agreement, formerly adopted under Ordinance 2013-10, to include the Motor Vehicle/RV/Boat Storage as a permitted use, as well as the following changes:

- A manager's residence was not constructed in Phase 1. This is now proposed in Phase 2 in an existing building near the secondary egress drive on West Lady Lake Boulevard. Building being approximately 763 square feet.

- Phase 2 changes the originally planned twelve (12) mini storage buildings totaling 41,000 square feet to two (2) proposed Indoor Motor Vehicle/RV/Boat Storage Buildings totaling 41,400 square feet.

- Phase 2 now includes a proposed RV sewage dump station approximately 40' inside the gate at the secondary egress drive.

- Phase 3 is no longer proposed. Six (6) mini storage buildings will not be planned in Phase 3.

- A new total of 152,452 square feet of buildings are planned for the site with a net reduction of 9,548 square feet from the originally approved development. The originally approved building coverage on-site was 162,000 square feet.

As part of the application, the applicant has provided the new terms of the Memorandum of Agreement (Exhibit "B") and a bubble plan (Exhibit "C") showing the modified buildings, dump station location, new phasing boundaries, retention pond areas, parking area, drive aisles, landscaping buffers, dumpsters location, and gate.

The application has been reviewed and determined to be complete. The applicant has submitted all appropriate material in compliance with the Land Development Regulations (LDRs) and they are ready for transmittal to the Planning & Zoning Board.

The Zoning and Future Land Use designations of the adjacent properties are as follows:

Zoning

Subject Property	Lady Lake – Planned Commercial (CP)
Zoning of Adjacent Properties	
West	Lake County-Agricultural Residential
East	Lady Lake –MF-12 (Up to 12 dwelling units per acre)
North	PFD (Public Facilities District)/ Lake County-Agricultural
South	Lady Lake- Planned Unit Development (PUD)

Future Land Use

Subject Property	Lady Lake – General Commercial Retail Sales & Services (RET)
Future Land Use of Adjacent Properties	
West	Lake County – Urban Low
East	Lady Lake –Multi-Family Low Rise- (MF-LR)
North	Lady Lake- Other Institutional Facilities (OIF)/Lake County-Urban Low
South	Lady Lake – General Commercial Retail Sales & Services (RET)

The current Future Land Use Designation of the subject property (12.65 ± acres) Lady Lake Commercial General – Retail Sales & Services (RET) is compatible with the requested commercial uses. Therefore, the applicant is not requesting any changes regarding the future land use designation with this application.

Comments:

1.) Permitted Uses and restrictions of the property will be governed by the attached Memorandum of Agreement, superseding all uses and prohibitions as stated in the Memorandum of Agreement executed on September 18, 2013, as recorded in ORB. 4384 PGS. 886-893.

2.) Should the amendment to the Memorandum of Agreement be approved, the applicant will have to supply a modified site plan, via the major modification to site plan process (applicant is undergoing this process concurrently).

Notices to inform the surrounding property owners (9) within 150' of the property of the proposed Rezoning-CP MOA Amendment were mailed by certified mail return receipt on Thursday, January 22, 2015. To date, seven (7) certified mail receipts have been returned; no comments regarding objection or support of the amendment have been received to date.

Past Actions

At the December 15, 2014, **Special Commission Meeting** (Conceptual Workshop) it was the consensus of the Commission that they were in favor of advancement of the proposed changes for Rolling Acres Self Storage (Tree Tops) as presented.

The application materials were circulated to members of the **Technical Review Committee (TRC)**, on Wednesday, January 28, 2015. No comments were forwarded that would prohibit advancement of the application to the Planning and Zoning Board.

Public Hearing Dates:

The **Town Commission** is scheduled to hear Ordinance 2015-01 for first reading on Monday, March 2, 2015, at 6:00 p.m.

The **Town Commission** is scheduled to consider Ordinance 2015-01 on second reading and final reading at the special meeting to be held on Monday, March 16, 2015, at 6:00 p.m.

FISCAL IMPACT: $ **-0-** **[ ] Capital Budget**

[ ] Operating **[ ] Other**

ATTACHMENTS: **[x] Ordinance(s)** **[ ] Resolution** **[ ] Budget Resolution**

[ ] Other

[ ] Support Documents/Contracts Available for Review in Manager's Office

---

WH 2-2-15

DEPARTMENT HEAD		**Submitted** 2/2/15	**Date**
FINANCE DEPARTMENT		**Approved as to Budget Requirements**	**Date**
TOWN ATTORNEY		**Approved as to Form and Legality**	**Date**
TOWN MANAGER		**Approved Agenda Item for:** 2/2/15	**Date**

COMMISSION ACTION: **[✓] Approved as Recommended** **[ ] Disapproved**
(Gaudreau/McKenzie 5-0)

[ ] Tabled Indefinitely **[ ] Continued to Date Certain**

[ ] Approved with Modification

INSTRUMENT#: 2013107392 OR BK 4384 PG 886 PAGES: 8 9/25/2013 3:54:08 PM
NEIL KELLY, LAKE COUNTY CLERK OF THE CIRCUIT COURT
REC FEES: $69.50

TOWN OF LADY LAKE
409 FENNELL BOULEVARD
LADY LAKE FL 32159

RETURN

ORDINANCE NO. 2013-10

AN ORDINANCE OF THE TOWN OF LADY LAKE; AMENDING ORDINANCE NO. 98-08; REQUESTING AMENDMENT OF THE MEMORANDUM OF AGREEMENT (MOA) FOR THE PLANNED COMMERCIAL DISTRICT (CP) FOR PROPERTY OWNED BY TREE TOPS GOLF INC., SUBJECT PROPERTY LOCATED AT 175 S. ROLLING ACRES RD. (ALTERNATE KEY #3250290), WITHIN THE TOWN LIMITS OF THE TOWN OF LADY LAKE, FLORIDA; PROVIDING FOR SEVERABILITY; ESTABLISHING AN EFFECTIVE DATE.

WHEREAS, on December 2, 1991, the Town of Lady Lake adopted a Comprehensive Plan (Ordinance No. 91-21) pursuant to the requirements of Chapter 163, Part II, Florida Statutes and Chapter 9J-5, Florida Administrative Code; and

WHEREAS, on January 23, 1992, the Florida Department of Community Affairs determined that the Town of Lady Lake Comprehensive Plan was in compliance with the requirements of Chapter 163, Part II, Florida Statutes, and Chapter 9J-5, Florida Administrative Code; and

WHEREAS, on August 15, 1994, the Town of Lady Lake adopted the Land Development Regulations of the Town of Lady Lake, Florida, and Official Zoning Map in accordance with the Town of Lady Lake Comprehensive Plan and the requirements of Chapter 163, Part II, Florida Statutes; and

WHEREAS, on August 12, 2013, pursuant to the provisions of the Town of Lady Lake Land Development Regulations, the Planning and Zoning Board of the Town of Lady Lake reviewed the proposed amendment to the Memorandum of Agreement which is attached hereto as Exhibit "B" and recommended to the Town Commission of the Town of Lady Lake that said amendment be adopted; and

WHEREAS, the Town Commission of the Town of Lady Lake, through Ordinance No. 98-08, approved, at a duly noticed meeting, redesignation of said property owned by Tree Tops Golf Inc., and approved and entered into a Memorandum of Agreement setting forth certain permitted uses under the "CP" zoning; and

WHEREAS, on September 10, 2003, the Town of Lady Lake and Tree Tops Golf Inc. amended the Memorandum of Agreement to include additional uses as recorded in ORB 2418, Pgs. 2070-2074, and at this time, again desire to amend the Memorandum of Agreement and the "CP" zoning to include and establish new permitted uses as well as other terms regarding setbacks, new buildings, landscaping buffers, parking spaces, loading space requirements, and water retention areas.

NOW THEREFORE, be it ordained and enacted by the Town Commission of the Town of Lady Lake, in Lake County, Florida:

Section 1. **Amendment for Changes Within the Site.** Said property is more particularly described in Exhibit "A", attached hereto and incorporated herein. The existing "CP" zoning and the existing Memorandum of Agreement entered into by the parties is hereby modified and amended to include and establish new permitted uses as well as other terms regarding setbacks, new buildings, landscaping buffers, parking spaces, loading space requirement and water retention areas.

Section 2. **Conflict.** The prior agreement as adopted under Ordinance No. 98-08 is hereby deleted in its entirety and is replaced in its entirety by Exhibit "B".

Section 3. **Severability.** If any section, sentence, clause, phrase or word of this Ordinance is for any reason held, or declared to be unconstitutional, inoperative or void, such holding or invalidity shall not effect the remaining portions of this Ordinance; and it shall be construed to have been the Town Commission's intent to pass this Ordinance without such unconstitutional, invalid or inoperative part therein; and the remainder of this Ordinance, after the exclusion of such part or parts, shall be deemed and held to be valid, as if such parts had not been included herein; or if this Ordinance or any provisions thereof shall be held inapplicable to any person, groups of persons, property, kind of property, circumstances or set of circumstances, such holding shall not effect the applicability thereof to any other person, property or circumstances.

Section 4. **Effective Date.** This Ordinance shall become effective immediately upon final reading and adoption by the Town Commission of Town of Lady Lake, Florida in accordance with Florida law.

PASSED AND ORDAINED this **18th** day of **September**, 2013, in the regular session of the Town Commission of the Town of Lady Lake, Lake County, Florida, upon the Second/Final Reading.

TOWN OF LADY LAKE, FLORIDA

James Richards, Mayor

ATTEST:

Kristen Kollgaard, Town Clerk

APPROVED AS TO FORM:

Derek Schroth, Town Attorney

Ordinance No. 2013-10

EXHIBIT "A"
Legal Description

SECTION 20, TOWNSHIP 18 SOUTH, RANGE 24 EAST, LAKE COUNTY, FLORIDA

LADY LAKE, LEE & STEVENS ADD LOT 9, 10, 11--LESS E 46 FT—PB 8 PG 11 ORB 1671 PG 823

Property Appraisers Parcel Identification (Folio) Number: 2018241105-000-00900

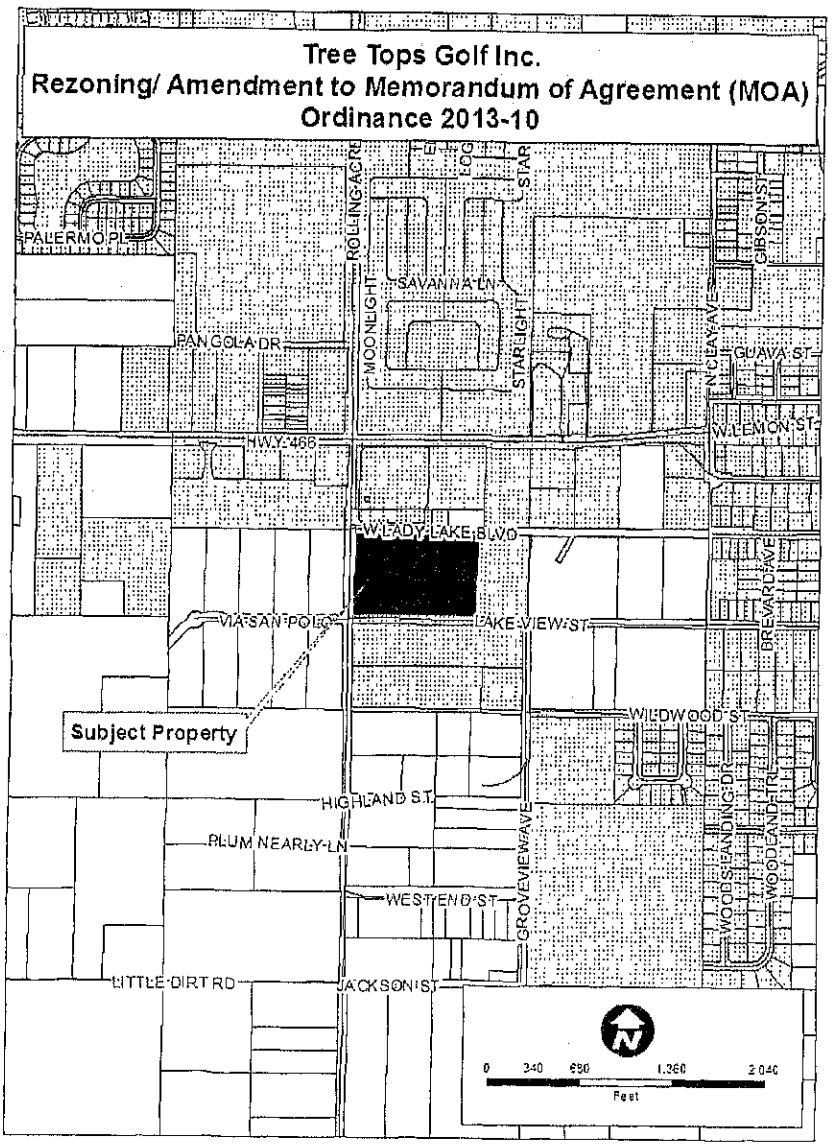

EXHIBIT "B"
MEMORANDUM OF AGREEMENT

This Memorandum of Agreement is dated this 18th day of September, 2013 between the Town of Lady Lake, Florida (the "Town") and Tree Tops Golf, Inc. ("Property Owner").

RECITALS

1. The Property Owner is the fee simple owner of certain real property in Lady Lake, Florida as described in the legal description attached as Exhibit "A".

2. On September 10, 2003, the Town and the owner entered into a Memorandum of Agreement ("MOA") pursuant to the provisions of Chapter 5, Section 4) o) 5) a) 1) of the Town's Land Development regulations.

3. The real property described in the legal description is zoned CP "Planned Commercial" pursuant to the Ordinance No. 98-08, November 2, 1998.

4. The applicant wishes to amend the existing MOA to include additional uses.

5. At this time, the parties wish to enter into an amended Memorandum of Agreement pursuant to the provisions of the Town's Land Development Regulations.

NOW THEREFORE, In recognition of the foregoing, the parties agree to the following terms and conditions as part of the CP zoning for that property described in the attached legal description, Exhibit "A".

1. Permitted Uses. Retail sales & services, miniature golf and associated retail sales and services, softball batting cages, golf driving range and associated accessory uses, mini storage with manager's residence and office.

2. Uses Expressly Prohibited. Any and all uses other than those aforementioned as "permitted uses" shall be expressly prohibited.

3. Hours of Operation. The hours of operation shall be as follows:
   A. Open at 7:00 a.m.
   B. Close at 9:00 p.m.

4. Design Standards.
   A. The maximum impervious surface ratio (which includes building coverage) shall be limited to eighty percent (80%).
   B. Maximum building height is thirty-five feet (35') unless adequate fire protection measures are provided.
   C. Setback requirements shall be:

1. Front Yard Setback – Front Yard to Rolling Acres Road & West Lady Lake Boulevard – Twenty-Five (25) feet minimum
2. Side Yard Setback: - Five (5) feet minimum
3. Rear Yard Setback: - Fifteen (15) feet minimum

5. Parking and Accessibility. Parking requirements shall be as required pursuant to Chapter 7 of the Town's Land Development Regulations for the specific use. All parking spaces shall be ten by twenty (10 x 20) feet in size. The required parking on the site shall be comprised of a minimum of 59 paved parking spaces in conformance with adopted code and as indicated on the site plan. Cross Access Easement to other sites will not be provided based on the nature of the business as a gated mini storage facility operation. The mandatory paving extension of Lady Lake Boulevard shall occur prior to, or concurrent with, the opening of the secondary egress location in Phase II as depicted on the Bubble Plan, and attached hereto as Exhibit "C". The paved access shall comply with all Town road construction standards.

6. Landscaping. The applicant shall utilize the existing natural vegetative (Oak Tree) buffer within the property as shown on the site plan for buffer landscape requirements. At which time the property is redeveloped, a Class "A" Landscape Buffer, ten (10) feet in width, shall be installed pursuant to Chapter 10, Landscaping section of the Land Development Regulations. In addition, the west buffer abutting Rolling Acres Road shall contain a decorative fence; all other buffers shall contain decorative (coated) chain link fencing in addition to the landscaping material.

7. Water Retention Areas. The drainage and stormwater retention requirements of the Town and the appropriate regulatory agencies shall be met and approved by the Town Consulting Engineer. These areas shall be properly maintained by the developer.

8. Lighting. All lighting for the proposed facilities shall be designed and located such that light and/or glare shall be directed upon the subject property only.

9. Potable water & Sanitary Sewer. The property described in Exhibit "A'" shall connect to the Town of Lady Lake's potable water, central sewer, and reclaim/reuse systems at time of commencement of Phase I. All costs associated with design, permitting, engineering, materials, construction and inspections shall be the sole cost of the developer.

10. Development Phases:
    A. Phase I: (14) Mini storage buildings, parking spaces, front parking lot area, manager's residence, existing retail building,, dumpster area, and retention ponds.
    B. Phase II: (12) Additional mini storage buildings and parking spaces retention pond, and secondary egress drive.

C. Phase III: (6) Additional mini storage buildings and parking spaces.

Note: The mini golf course, batting cages, and associated accessory uses may continue in operation until that time which Phase III improvements commence.

11. Compliance with All Requirements. Nothing herein shall relieve the Developer or their successors or assigns from obtaining any local, regional, state or federal permits or compliance with any applicable ordinance, laws, rules or regulations necessary for the development of the property.

12. Heirs and Successors. The terms and conditions as set forth in this Memorandum of Agreement shall insure to the benefit of, and shall constitute a covenant running with the land and under the terms, conditions and provisions hereof, and shall be legally binding upon any heirs, assigns and successors in title or interest, and shall be subject to each and every condition herein set out.

13. Recordation. The Memorandum of Agreement shall be recorded in the Public Records of Lake County, Florida.

14. Enforcement. Enforcement of this Memorandum of Agreement shall be through the Town of Lady Lake Town Commission. Upon approval of this agreement, the aforementioned property shall only be used for the purposes described herein. No change in the use, further expansion of the uses, additions to the uses, or additions to the facilities shall be permitted except as approved by formal amendment of this Memorandum of Agreement. Any other proposed use shall be specifically authorized by amendment and approval of the Town of Lady Lake Commission and shall be legally binding upon any heirs, assigns and successors in title or interest.

Ordinance No. 2013-10

IN WITNESS WHEREOF, the parties hereto have executed this Agreement on the date first above written.

OWNER

By: _____
Michael Girard

State of Florida
County of Lake

The foregoing instrument was acknowledged before me this 11 day of SEPT, 2013 by MICHAEL GIRARD, Owner of the Property, who is personally known to me or has produced FL DL G663-556-68-172-0 as identification.

_____
Notary Public, State of Florida

My Commission Expires:

Notary Public State of Florida
Beverly Fay Lester
My Commission DD978218
Expires 04/18/2014

TOWN OF LADY LAKE, FLORIDA
LAKE COUNTY, FLORIDA

By: _____
James Richards, Mayor

ATTEST:

_____
Kris Kollgaard, Town Clerk

APPROVED AS TO FORM:

_____
Derek Schroth, Town Attorney

Ordinance No. 2013-10

EXHIBIT "C"
BUBBLE PLAN

Tree Tops Golf,Inc.

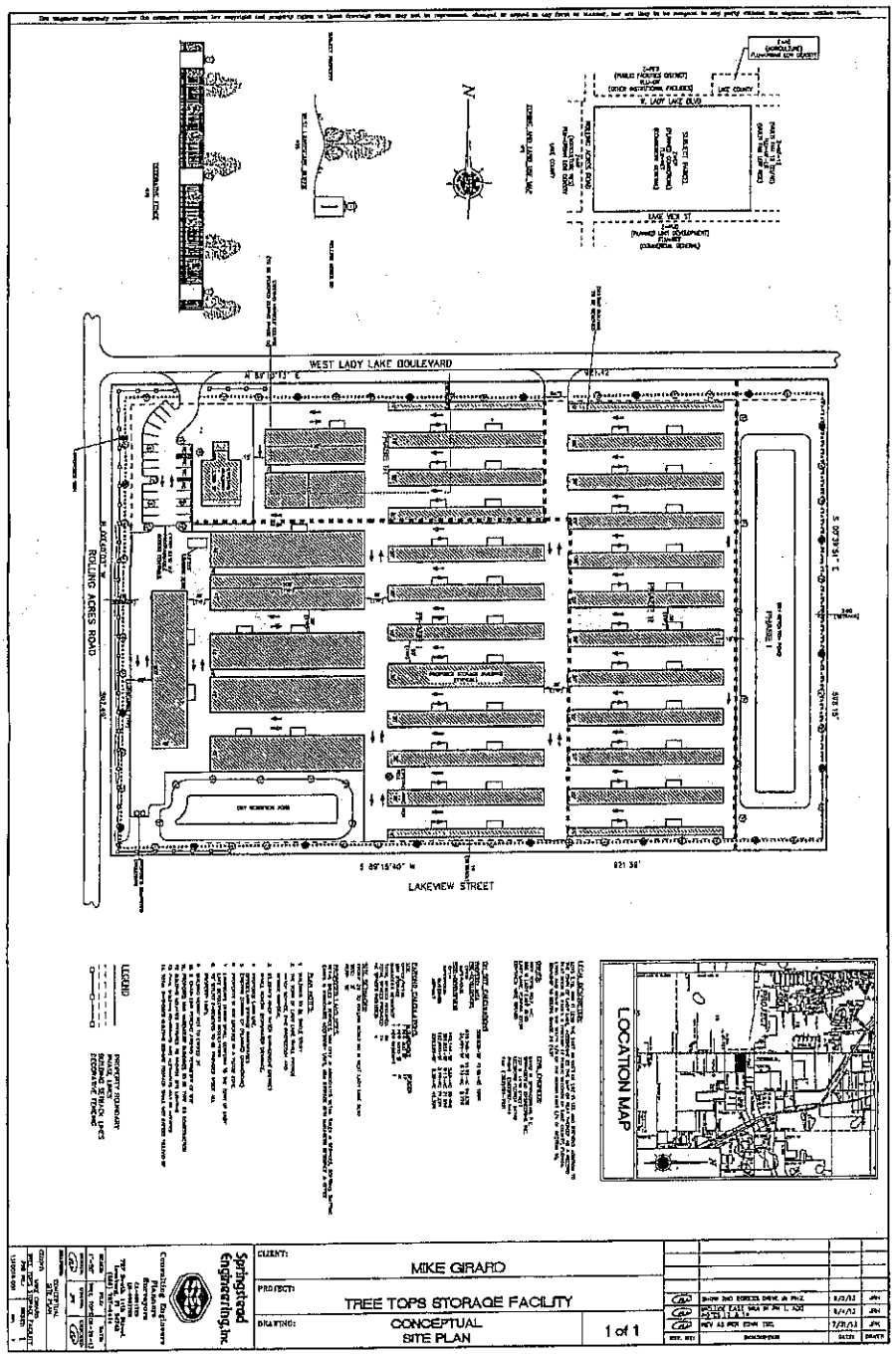

~~**MINUTES OF THE TOWN OF LADY LAKE**~~
~~**REGULAR PLANNING AND ZONING BOARD MEETING**~~
~~**LADY LAKE, FLORIDA**~~

~~**February 9, 2015**~~
~~**5:30 p.m.**~~

~~The Planning and Zoning Board Meeting was held in the Town Hall Commission Chambers, 409 Fennell Blvd., Lady Lake, Florida.~~

~~**CALL TO ORDER:** John Gauder, Chairperson~~

~~**PLEDGE OF ALLEGIANCE:** John Gauder, Chairperson~~

~~**ROLL CALL** Gil Pierson, Member~~
~~Mike McKenzie, Member~~
~~Alfred Monteleone, Member (arrived at 5:37 p.m.)~~
~~William Sigurdson, Vice Chairperson/Member~~
~~John Gauder, Chairperson~~

~~**STAFF MEMBERS PRESENT:** Attorney Todd Mazenko, BRS Legal; Thad Carroll, Growth Management Director; Wendy Then, Town Planner; Kris Kollgaard, Town Manager; and Julia Wolfe, Staff Assistant to Town Clerk~~

~~**OPEN FORUM:**~~

~~Chairperson Gauder asked if anyone in the audience had any comments or questions. There were no comments or questions.~~

~~**NEW BUSINESS:**~~

~~1. **Approval of Minutes** – December 8, 2014 Regular Meeting~~

~~***Upon a motion by Member McKenzie and a second by Vice Chairperson/Member Sigurdson, the Planning and Zoning Board approved the minutes of the Planning and Zoning Board Meeting of December 8, 2014 as presented by a vote of 4-0.***~~

2. Ordinance No. 2015-01 – Rolling Acres Self Storage Facility (Tree Tops Golf, Inc.) – Located at the Corner of West Lady Lake Blvd. and Rolling Acres Road at 175 S. Rolling Acres Road – Providing for a Modification of the Town of Lady Lake Planned Commercial (CP) Zoning Memorandum of Agreement (MOA) – (Alternate Key Number 3250290) (Wendy Then)

Wendy Then, Town Planner, presented the background summary for this agenda item (on file in the Clerk's Office). She stated the applicants, Michael and Joy Girard, have submitted an application on behalf of Rolling Acres Self Storage (a.k.a. Tree Tops Golf, Inc.) for property located at the corner of West Lady Lake Boulevard and Rolling Acres Road; addressed as 175 S. Rolling Acres. She stated the property includes approximately 12.65 ± acres, identified by alternate key #3250290, within the Town of Lady Lake.

DRAFT

Ms. Then stated the subject property is currently operating as a self-storage facility consisting of eight buildings providing 109,700 sq. ft. of storage space and there is also a 1,200 sq. ft. office in addition to the original office building of 3,389 sq. ft. She stated there are also batting cages and a miniature golf course in operation on the property, as well as an existing building of 763 sq. ft. to be converted to a manager's residence. Pursuant to the provisions of the Town of Lady Lake Land Development Regulations, the applicant is requesting to modify the Memorandum of Agreement, formerly adopted under Ordinance No. 2013-10, to include the motor vehicle/RV/boat storage as a permitted use, as well as the following changes:

- A manager's residence was not constructed in Phase 1. This is now proposed in Phase 2 in an existing building near the secondary egress drive on West Lady Lake Boulevard. Building being approximately 763 sq. ft.

- Phase 2 changes the originally planned 12 mini storage buildings totaling 41,000 sq. ft. to two proposed indoor motor vehicle/RV/boat storage buildings totaling 41,400 sq. ft.

- Phase 2 now includes a proposed RV sewage dump station approximately 40' inside the gate at the secondary egress drive.

- Phase 3 is no longer proposed. Six mini storage buildings will not be planned in Phase 3.

- A new total of 152,452 sq. ft. of buildings are planned for the site with a net reduction of 9,548 sq. ft. from the originally approved development. The originally approved building coverage on-site was 162,000 sq. f t.

As part of the application, the applicant has provided the new terms of the Memorandum of Agreement (Exhibit "B") and a bubble plan (Exhibit "C") showing the modified buildings, dump station location, new phasing boundaries, retention pond areas, parking area, drive aisles, landscaping buffers, dumpsters location, and gate.

The application has been reviewed and determined to be complete. The applicant has submitted all appropriate material in compliance with the Land Development Regulations (LDRs) and they are ready for transmittal to the Planning & Zoning Board.

Aerial views of the property and photos of the property and postings were shown.

Ms. Then stated the Zoning and Future Land Use designations of the adjacent properties are as follows:

Zoning

Subject Property	Lady Lake – Planned Commercial (CP)
Zoning of Adjacent Properties	
West	Lake County-Agricultural Residential
East	Lady Lake –MF-12 (Up to 12 dwelling units per acre)
North	PFD (Public Facilities District)/ Lake County-Agricultural
South	Lady Lake- Planned Unit Development (PUD)

DRAFT

Future Land Use

Subject Property	Lady Lake – General Commercial Retail Sales & Services (RET)
Future Land Use of Adjacent Properties	
West	Lake County – Urban Low
East	Lady Lake –Multi-Family Low Rise- (MF-LR)
North	Lady Lake- Other Institutional Facilities (OIF)/Lake County-Urban Low
South	Lady Lake – General Commercial Retail Sales & Services (RET)

The current Future Land Use Designation of the subject property (12.65 ± acres) is Lady Lake Commercial General Retail Sales & Services (RET) and is compatible with the requested commercial uses. Therefore, the applicant is not requesting any changes regarding the future land use designation with this application.

Comments for this application are as follows:

1.) Permitted Uses and restrictions of the property will be governed by the attached Memorandum of Agreement, superseding all uses and prohibitions as stated in the Memorandum of Agreement executed on September 18, 2013, as recorded in ORB. 4384 PGS. 886-893.

2.) Should the amendment to the Memorandum of Agreement be approved, the applicant will have to supply a modified site plan, via the major modification to site plan process (applicant is undergoing this process concurrently). She stated the modified site plan has already been submitted and is in the process of being reviewed.

Ms. Then reported that notices to inform the surrounding property owners (9) within 150' of the property of the proposed Rezoning-CP MOA Amendment were mailed by certified mail return receipt on Thursday, January 22, 2015. To date, nine certified mail receipts have been returned, and there have been no phone calls, e-mails or written statements thus far on the matter.

Ms. Then stated that at the December 15, 2014 Special Commission Meeting (Conceptual Workshop), it was the consensus of the Commission that they were in favor of advancement of the proposed changes for Rolling Acres Self Storage (Tree Tops) as presented.

Ms. Then stated the application materials were circulated to members of the Technical Review Committee (TRC), on Wednesday, January 28, 2015. No comments were forwarded that would prohibit advancement of the application to the Planning and Zoning Board. She stated the Town Commission is tentatively scheduled to hear Ordinance No. 2015-01 for first reading at their regular meeting on Monday, March 2, 2015 at 6 p.m., and for second/final reading at the special meeting to be held on Wednesday, March 16, 2015 at 6 p.m.

Ms. Then stated the applicant was present to answer any questions.

Vice Chairperson Sigurdson asked if there will be any changes to the green area from what was proposed. He asked if the batting caging will be staying.

DRAFT

Ms. Then replied yes; with the reduction of the building there will be more green area than what was proposed and the batting cages will be staying.

Chairperson Gauder asked if there was anyone in the audience who wished to speak on this matter. There was no one.

Upon a motion by Vice Chairperson/Member Sigurdson, and a second by Member McKenzie, the Planning and Zoning Board recommended transmittal and approval of Ordinance No. 2015-01 to the Town Commission for consideration by the following roll call vote:

MCKENZIE	***YES***
MONTELEONE	***YES***
PIERSON	***YES***
SIGURDSON	***YES***
GAUDER	***YES***

CHAIRPERSON/MEMBERS' REPORT:

There were no comments or reports.

ADJOURN:

With nothing further to discuss, the meeting was adjourned at 5:40 p.m.

Julia Wolfe, Staff Assistant to Town Clerk

John Gauder, Chairperson

Minutes transcribed by Julia Wolfe, Staff Assistant to Town Clerk

DRAFT

L-11

TOWN COMMISSION AGENDA ITEM

REQUESTED COMMISSION MEETING DATE: **March 2, 2015 – FIRST READING**

SUBJECT: **Ordinance 2015-03 - An Ordinance Of The Town Commission Of The Town Of Lady Lake, Florida, Amending Chapter 13 Of The Town Of Lady Lake Code Of Ordinances Entitled Special Assessments, Impact Fees, Supplemental Fees, Section 13-21 Entitled Levy And Purpose, For The Purposes Of Increasing The Supplemental Education Assistance Fee Rates To 75% Of The Rate Differential Of The Full Impact Fee Amount Recommended In The Adopted "Impact Fees For Educational Facilities In Lake County, Florida" Study Dated June 7, 2011, And The Rate Adopted By Lake County, Florida, By Ordinance 2014-72.**

DEPARTMENT: **Growth Management**

STAFF RECOMMENDED MOTION:

Staff recommends approval of Ordinance 2015-03 increasing the Supplemental Education Assistance Fee Rates To 75% of the Rate Differential of the Full Impact Fee Amount Recommended in the Adopted "Impact Fees for Educational Facilities in Lake County, Florida" Study Dated June 7, 2011, and the Rate adopted By Lake County, Florida, By Ordinance 2014-72.

On December 3, 2014, the Lake County Board of County Commissioners voted to increase the Lake County School Impact Fees to an amount equivalent to seventy-five percent (75%) of the adopted Impact Fee Study prepared by Henderson Young & Company, dated June 7, 2011. At this time, the Town of Lady Lake would also like to increase the Supplemental School Impact Fee Rate, first imposed under Ordinance 2005-41, with subsequent amendments thereafter.

As per the Impact Fee Study prepared by Henderson Young & Company, dated June 7, 2011, the Public School Impact Fee per Dwelling Unit was recommended to be $10,292.38 for single family homes; $6,180.99 for Multi-family dwellings, and $3,382.01 for mobile homes. Under Lake County Ordinance 2014-72, the County has adopted a rate of collection at seventy-five (75%) of those amounts, thus imposing fees of $7,719 for single-family homes, $4,636 for multi-family dwellings, and $2,537 for mobile home units. Age-restricted communities remain exempt.

Given that the adopted study has provided justification for collection at rates higher than those imposed by the County, to become effective April 6, 2015, the Town retains the right to collect a fee to supplement the County's impact fee, provided that the sum of the fees collected by both

the Town and the County do not exceed the recommended rate as established by adopted Impact Fee Study prepared by Henderson Young & Company, dated June 7, 2011. The rate differentials are as follows:

Table 1

Dwelling Type	Full Rate	County Rate (75%)	Differential
Single Family Homes	$10,292.38	$7,719	$2,573.38
Multi-Family	$6,180.99	$4,636	$1,544.99
Mobile Home	$3,382.01	$2,537	$845.01

Provided that the assessment of the impact fees yield differentials as noted above, the collection of the Supplemental School Impact Fees by the Town of Lady Lake would be as follows:

Table 2

Dwelling Type	Differential	75% of the Rate Differential
Single Family Homes	$2,573.38	$1,930
Multi-Family	$1,544.99	$1,158
Mobile Home	$845.01	$ 633

Florida Statute 163.31801 (3) (d), states that the following shall be adhered to regarding when the fee can be imposed following adoption of the ordinance:

(d) Require that notice be provided no less than 90 days before the effective date of an ordinance or resolution imposing a new or increased impact fee. A county or municipality is not required to wait 90 days to decrease, suspend, or eliminate an impact fee.

Therefore, staff recommends adopting the Supplemental School Impact Fee Rates as proposed in Table 2 above, reflecting a 75% collection of the differential between the County's impact fee assessment, and the recommended rate as established by adopted Impact Fee Study prepared by Henderson Young & Company, dated June 7, 2011. The effective date of collection will begin on July 1, 2015.

Public Hearing Dates:

The **Town Commission** is scheduled to consider Ordinance 2015-03 on second reading and final reading at their regular meeting to be held on Monday, March 16, 2015, at 6:00 p.m.

FISCAL IMPACT: $ **-0-** **[ ] Capital Budget**

[ ] Operating **[ ] Other**

ATTACHMENTS: [x] Ordinance(s) [ ] Resolution [ ] Budget Resolution

[ ] Other

[ ] Support Documents/Contracts Available for Review in Manager's Office

DEPARTMENT HEAD 2-24-2015		Submitted 2/24/15	Date
FINANCE DEPARTMENT		Approved as to Budget Requirements	Date
TOWN ATTORNEY		Approved as to Form and Legality	Date
TOWN MANAGER		Approved Agenda Item for: 3/2/15	Date 2/24/15

COMMISSION ACTION: [ ] Approved as Recommended [ ] Disapproved

[ ] Tabled Indefinitely [ ] Continued to Date Certain

[ ] Approved with Modification

ORDINANCE NO. ~~2014-01~~2015-03

AN ORDINANCE OF THE TOWN COMMISSION OF THE TOWN OF LADY LAKE, FLORIDA, AMENDING CHAPTER 13 OF THE TOWN OF LADY LAKE CODE OF ORDINANCES ENTITLED SPECIAL ASSESSMENTS, IMPACT FEES, SUPPLEMENTAL FEES, SECTION 13-21 ENTITLED LEVY AND PURPOSE, FOR THE PURPOSES OF ~~REDUCING~~ INCREASING THE SUPPLEMENTAL EDUCATION ASSISTANCE FEE RATES TO ~~25~~75% OF THE ~~ORIGINAL~~ RATE DIFFERENTIAL OF THE FULL IMPACT FEE AMOUNT ~~SET~~ RECOMMENDED IN THE ADOPTED ~~BY ORDINANCE NO. 2006-61~~ 'IMPACT FEES FOR EDUCATIONAL FACILITIES IN LAKE COUNTY, FLORIDA" STUDY DATED JUNE 7, 2011, AND THE RATE ADOPTED BY LAKE COUNTY, FLORIDA, BY ORDINANCE 2014-72; PROVIDING FOR SEVERABILITY; PROVIDING FOR INCLUSION IN THE CODE; PROVIDING FOR FILING; PROVIDING AN EFFECTIVE DATE.

WHEREAS, Chapter 13 of the Lady Lake Code imposes special assessments, impact fees and supplemental fees for Education, Libraries, Parks, Water, Wastewater and Reclaimed Water; and

WHEREAS, the Town Commission wishes to stimulate the local economy by encouraging economic development and promoting job creation through the reduction of supplemental educational assistance fees; and

WHEREAS, supplemental educational assistance fees are applicable to all new residential construction within the Town limits, and can be a substantial component of a developer's total development costs; and

WHEREAS, the Board of County Commissioners of Lake County, Florida, on ~~October 10, 2013~~ December 3, 2014, enacted Ordinance No. ~~2013-55~~2014-72, re-imposing the collection of School Impact Fees at an ~~reduced~~ increased rate-effective ~~January 13, 2014~~April 6, 2015, and

WHEREAS, in order to stimulate the local economy, it has been determined that the reduction of the collection of supplemental educational assistance fees is necessary; and

WHEREAS, the Town Commission now finds it is in the best interest of the citizens of the Town of Lady Lake to make these changes to the Town Code.

NOW, THEREFORE, BE IT ORDAINED BY THE TOWN COMMISSION OF THE TOWN OF LADY LAKE THAT:

Section 1. Recitals. The foregoing recitals are true and correct and incorporated herein by reference.

Section 2. Amendments. Section 13-21 and Section 13-24, Code of Ordinances of the Town of Lady Lake, is hereby amended ~~to read~~ as follows:

Sec. 13-21. – Levy and purpose.

(a) The ~~reduction of~~Town levies supplemental educational assistance fees in the amounts set forth in Section 13-24 Rates ~~shall be for a period~~ beginning ~~January 20, 2014~~July 1, 2015 ~~and extending until January 21, 2015~~. The ~~reduction~~ increased fees in the amounts set forth in Section 13-14 Rates shall not apply to pre-payments, deferral agreements unless the agreement specifically allows, or the use of impact fee credits.

(b) For the purpose of helping to defray the costs of new or expanded educational facilities and equipment attributable to new residential construction within the town limits, supplemental educational assistance fees are hereby ~~reduced~~ increased to ~~25~~75% of the ~~original~~ rate differential of the full impact fee amount recommended in the adopted Impact Fee Study prepared by Henderson Young & Company, dated June 7, 2011, and the impact fee rate adopted by Lake County, Florida by Ordinance 2014-72~~as set by Ordinance No. 2006-61~~, beginning ~~January 20, 2014~~July 1, 2015, on new residential construction within the town limits in accordance with the schedule of fees and other provisions of this article.

Sec. 13-24. Rates.

(a) All residential construction occurring within the Town shall pay the following Supplemental Education Assistance Fee:

(1) Nineteen ~~Seven~~ hundred and ~~fifty~~ thirty dollars ($1,930.00 ~~$750.00~~) per dwelling unit

(2) ~~Four~~ Eleven hundred and fifty-eight dollars ($1,158.00 ~~450.00~~) per multi-family dwelling~~s~~ and

~~(2)~~(3) Six hundred and thirty-three dollars ($633.00) per mobile home unit.

(b) The payment of the Supplemental Education Assistance Fee shall be in addition to all other fees, charges or assessments due for the issuance of a building permit or final development order.

(c) The obligation for payment of the Supplemental Education Assistance Fee shall run with the land.

Section 3. Severability. The provisions of this Ordinance are declared to be separable and if any section, sentence, clause or phrase of this Ordinance shall for any reason be held to be invalid or unconstitutional, such decision shall not effect the validity of the remaining sections,

sentences, clauses or phrases of this Ordinance, but they shall remain in effect, it being the legislative intent that this Ordinance shall stand notwithstanding the invalidity of any part.

Section 4. Inclusion in the Town of Lady Lake Code. It is the intention of the Town Commission of the Town of Lady Lake that the provisions of this Ordinance shall become and be made a part of the Town of Lady Lake Code of Ordinances and that the sections of this Ordinance may be renumbered or re-lettered and the word "ordinance" may be changed to "section", "article" or such other appropriate word or phrase to accomplish such intentions.

Section 5. Effective Date. This Ordinance shall become effective July 1, 2015.

Section 6. Conflicting Ordinances Repealed. Any provision of an ordinance which conflicts with this ordinance, including Ordinance 2014-01, is inferior and repealed. The provisions of this Ordinance, Ordinance 2015-03, supersede and control over any conflicting provisions.

Section ~~5~~7. Filing. The clerk shall be and is hereby directed forthwith to file this Ordinance in accordance with Florida law.

PASSED AND ORDAINED in the regular session of the Town Commission of the Town of Lady Lake, Lake County, Florida, this ~~3rd~~16th day of ~~February~~**March**, ~~2014~~**2015**.

TOWN OF LADY LAKE, FLORIDA

_____

Ruth Kussard, Mayor

ATTEST:

_____

Kris Kollgaard, Town Clerk

APPROVED AS TO FORM:

_____

Derek Schroth, Town Attorney

Staff Summary

This ordinance amends Chapter 22, Lake County Code, Section 22-22 regarding Educational Impact Fees. This ordinance will increase the Educational Impact Fee to seventy-five percent (75%) of the adopted Impact Fee Study prepared by Henderson Young & Company, dated June 7, 2011.

ORDINANCE NO. 2014 - 72

AN ORDINANCE OF THE BOARD OF COUNTY COMMISSIONERS OF LAKE COUNTY, FLORIDA; AMENDING SECTION 22-22, LAKE COUNTY CODE, TO INCREASE THE EDUCATIONAL IMPACT FEES TO 75% OF THE RATE RECOMMENDED IN THE ADOPTED IMPACT FEE STUDY DATED JUNE 7, 2011, TO BE EFFECTIVE APRIL 6, 2015; PROVIDING FOR SEVERABILITY; PROVIDING FOR INCLUSION IN THE CODE; PROVIDING FOR FILING WITH THE DEPARTMENT OF STATE; AND PROVIDING FOR AN EFFECTIVE DATE.

WHEREAS, Chapter 22 of the Lake County Code imposes impact fees for Transportation, Educational Facilities, Parks, Libraries and Fire; and

WHEREAS, in Ordinance No. 2013-55, the Board of County Commissioners did impose an Educational Impact Fee at a rate that was twenty-five percent (25%) of the adopted Impact Fee Study, prepared by Henderson Young & Company, dated June 7, 2011; and

WHEREAS, the Board now finds it is in the best interests of the citizens of Lake County to increase the Educational Impact Fee to seventy-five percent (75%) of the rate recommended in the Impact Fee Study prepared by Henderson Young & Company dated June 7, 2011, titled *Impact Fees for Educational Facilities in Lake County, Florida.*

NOW, THEREFORE, BE IT ORDAINED by the Board of County Commissioners of Lake County, Florida as follows:

Section 1. **Recitals.** The foregoing recitals are true and correct and incorporated herein by reference.

Section 2. **Amendment.** Section 22-22, Lake County Code, entitled 'Imposition,' is hereby amended to read as follows:

Sec. 22-22. Imposition.

(a) The imposition of educational impact fees on new development shall be suspended for a period beginning retroactively on January 1, 2011 and extending through January 12, 2014. The suspension shall not apply to pre-payments, deferral agreements unless the agreement specifically allows, or the use of impact

fee credits. Refunds of the educational impact fee shall be issued to the current owner of record for fees paid on a permit issued on or after January 1, 2011.

(b) ~~Effective January 13, 2014, a~~All residential construction occurring within the county, both within the unincorporated area and within the municipalities, shall pay the following educational system impact fees:

Single-family detached house, per dwelling unit ..... ~~$2,573.10~~7,719.00
Multi-family dwelling unit, per dwelling unit ..... ~~$1,545.25~~4,636.00
Mobile home, per dwelling unit ..... ~~$845.50~~2,537.00

Section 3. Severability. If any section, sentence, clause, or phrase of the Ordinance is held to be invalid or unconstitutional by any court of competent jurisdiction, then said holding shall in no way affect the validity of the remaining portion of this Ordinance.

Section 4. Inclusion in the Code. It is the intent of the Board of County Commissioners that the provisions of this Ordinance shall become and be made a part of the Lake County Code and that the sections of this Ordinance may be renumbered or relettered and the word "ordinance" may be changed to "section," "article," or such other appropriate word or phrase in order to accomplish such intentions.

Section 5. Filing with the Department of State. The clerk shall be and is hereby directed forthwith to send a certified copy of this Ordinance to the Secretary of State for the State of Florida.

Section 6. Directions to the Clerk of Court. The Clerk of Court is hereby directed to hold in escrow the Educational Impact Fees collected after the effective date of this ordinance until such a time as the School Board of Lake County, Florida presents to the Board of County Commissioners an updated Impact Fee Study which justifies the rates established herein.

Section 7. Effective. This Ordinance shall become effective as of April 6, 2015.

Enacted this 2nd day of December, 2014.

Filed with the Secretary of State December 5, 2014.

ATTEST:

Neil Kelly, Clerk of the
Board of County Commissioners
of Lake County, Florida

BOARD OF COUNTY COMMISSIONERS
OF LAKE COUNTY, FLORIDA

Jimmy Conner, Chairman

This 3rd day of December, 2014.

Approved as to form and legality:

Sanford A. Minkoff
County Attorney

FLORIDA DEPARTMENT of STATE

RICK SCOTT
Governor

KEN DETZNER
Secretary of State

December 5, 2014

Honorable Neil Kelly
Clerk of the Circuit Court
Lake County
550 West Main Street
P. O. Box 7800
Tavares, Florida 32778-7800

Attention: Susan Boyajan

Dear Mr. Kelly:

Pursuant to the provisions of Section 125.66, Florida Statutes, this will acknowledge your electronic copy of Lake County Ordinance No. 2014-72, which was filed in this office on December 5, 2014.

Sincerely,

Ernest L. Reddick
Program Administrator

ELR/lb

R. A. Gray Building • 500 South Bronough Street • Tallahassee, Florida 32399-0250
Telephone: (850) 245-6270 • Facsimile: (850) 488-9879
www.dos.state.fl.us

IMPACT FEES

FOR

EDUCATIONAL FACILITIES

IN

LAKE COUNTY, FLORIDA

Henderson
Young &
Company

June 7, 2011

TABLE OF CONTENTS

1. INTRODUCTION 1

2. NEXUS OF BENEFITS OF EDUCATIONAL FACILITIES 5

3. COSTS OF EDUCATIONAL FACILITIES PER STUDENT 10

4. IMPACT FEE PER DWELLING UNIT FOR EDUCATIONAL FACILITIES 21

LIST OF TABLES

Table 1: Current Enrollment Compared to Current Capacity ____ 6
Table 2: Enrollment Growth and Student Capacity Needed Next Five Years ____ 7
Table 3: School Building Cost per Student ____ 11
Table 4: Borrowing Cost Per Student ____ 13
Table 5: Land Cost Per Student ____ 14
Table 6: Off-Site Costs per Student ____ 14
Table 7: Ancillary Facility Costs per Student ____ 16
Table 8: School Bus Costs per Student ____ 17
Table 9: Revenue Credit Per Student ____ 19
Table 10: Total and Net Educational Facility Costs per Student ____ 20
Table 11: Public School Students Per Dwelling Unit ____ 22
Table 12: Public School Impact Fee per Dwelling Unit ____ 23

1. INTRODUCTION

Purpose of This Study

This study of impact fees for educational facilities in Lake County, Florida presents the methodology, summarizes the data, and explains the calculation of the fees. The methodology is designed to comply with the requirements of Florida law.

Definition and Rationale of Impact Fees

Impact fees are charges paid by new development to reimburse local governments and school boards for the capital cost of public facilities that are needed to serve new development and the people who occupy the new development.

Impact fees may be paid before or after public facilities are built. Impact fees that are paid before construction of public facilities are saved by the government until there is enough money to pay for needed public facilities. Impact fees that are paid after construction of public facilities constitute a repayment or reimbursement for expenditures (and/or debt) that the government incurred so that the public facilities would be available for each new development.

Local governments and school boards charge impact fees on either of two bases. First, as a matter of policy and legislative discretion, they may want new development to pay the full cost of its share of new public facilities because that portion of the facilities would not be needed except to serve the new development. In this case, the new development is required to pay for all the cost of its share of new public facilities.

On the other hand, local governments and school boards may use other sources of revenue to pay for the new public facilities that are required to serve new development. If, however, such revenues are not sufficient to cover the entire costs of new facilities necessitated by new development, the new development may be required to pay an impact fee in an amount equal to the difference between the total cost and the other sources of revenue.

There are many kinds of "public facilities" that are needed by new development, including schools, roads, water and sewer plants, parks, and other government facilities. This study covers public schools and related educational facilities in Lake County, Florida.

New development is synonymous with "growth". For some impact fees, new development includes new residential, retail, office, commercial, industrial and all other new construction. Impact fees for educational facilities, however, are charged only to new residential development: houses, apartments, mobile home parks, and other residential construction. Non-residential new development is not charged school impact fees, as explained in Chapter 3.

Rules Governing Impact Fees in Florida

Impact fees for educational facilities have been upheld by the Florida Supreme Court and the Court provided specific findings and conclusions that affect how impact fees for schools are designed and implemented. In addition, judicial decisions regarding impact fees for other public facilities also apply to the imposition of impact fees for schools.

Several court cases[1] provide direction in three broad areas of the development of impact fees: (1) who pays, and how much (the "fair share" rules), (2) where and how the fee can be used (the dual "nexus of benefit" rules), and (3) offsets against the fee (the "credits" rules).

First, the "fair share" rules require that impact fees can be charged only for the portion of the cost of public capital facilities that is attributable to new development. Impact fees cannot be charged to pay for the cost of reducing or eliminating deficiencies in existing facilities. Within this broad rule, specific guidance is given in several areas:

- It is permitted to distinguish among the impacts of different types of growth in establishing fee amounts (i.e., single-family homes can be shown to have different impacts than multi-family dwelling units or mobile homes, therefore the impact fees for each type of dwelling can be different than the other types),

[1] In St. Johns County V. Northeast Florida Builders Association, 583 So. 2d 635 (Fla. 1991) the Florida Supreme Court ruled that new development can be required to pay school impact fees. Volusia County v. Aberdeen at Ormond Beach, L.P., 760 So. 2d 126 (Fla. 2000) addressed the applicability of school impact fees to housing for senior citizens. The following five significant court cases also guide the development of impact fees in Florida: Contractors and Builders Association of Pinellas County v. City of Dunedin. 329 So.2d 314 (Fla. 1976); Hollywood. Inc. v. Broward County. 431 So.2d 606 (Fla. 4th DCA 1983); Home Builders and Contractors Association of Palm Beach County. Inc. v. Board of County Commissioners of Palm Beach County. 446 So.2d 140 (Fla. 4th DCA 1983); and Seminole County v. City of Casselberry, 541 So.2d 666 (Fla. 5th DCA 1989); City of Ormond Beach v. County of Volusia, 535 So.2d 302 (Fla. 5th DCA 1968). The Local Government Comprehensive Planning and Land Development Regulation Act also touches on some aspects of impact fees.

- Fee-payers should be able to pay a smaller fee if they can demonstrate that their development will have less impact than is presumed in the calculation of the impact fee schedule for their classification of property and the reduced impact is permanent (i.e., through land use restrictions), and

- Costs of facilities that will be used by new development and existing users must be apportioned between the two groups, such as on the basis of costs per student, when determining the amount of the fee.

Second, the dual "nexus of benefit" rules require a demonstrated reasonable connection (1) between the need for public capital facilities and the growth from the fee-paying development, and (2) between the expenditure of fee revenue and the benefits received by the fee-paying development. These two conditions limit where and when impact fees can be collected and used.

There are many ways that the nexus of benefit can be established, including personal use and use by others in the family (direct benefit), use by persons who provide goods or services to the fee-paying property (indirect benefit), expansion of jobs, wealth, goods, services, and taxes (general economic benefit) and geographical proximity (presumed benefit). The connections among needs, benefits and fees will vary according to the type of facility; schools will have different nexus of benefits criteria than roads. The nexus of benefit for schools will be based on the average number of public school students per dwelling unit. A detailed description of this data is presented later in this study.

Another connection among needs, benefits and fees can be the geographical relationship between a fee-paying development and the impact on a public capital facility. Some impact fees for roads or parks use geographical zones for calculating, collecting and spending impact fees. In the St. Johns County case, the Florida Supreme Court identified the constitutional requirement of "a uniform system of free public schools" (Article IX, Section 1, Florida Constitution), as a reason that school impact fees can be a uniform countywide system, therefore zones will not be used for Lake County's updated school impact fee.

Furthermore, the fee revenue must be expended within a reasonable period of time, but there is no single maximum limit in statutes or case law that applies to all impact fee expenditures. Explicit limitations on the expenditure of fees must be adequate to guide government personnel, and fee revenue must be earmarked for specific uses related to the public capital facilities for which the impact fee is charged.

Finally, the "credits" rules allow a fee-payer to have an impact fee reduced to reflect (1) contributions of land, cash, facilities, or other assets that meet the same

need as the fee, and (2) future payments of taxes that would ordinarily be used for the same public capital facilities for which the impact fee is being charged. Without such credits, the fee-paying development might pay more than its fair share. Court cases and legislation do not prohibit a local government or school board from establishing reasonable constraints on determining credits. For example, the location, quality and design of a donated public facility can be required to conform to adopted local standards for such facilities.

Data Sources

The data in this study of impact fees for educational facilities in Lake County, Florida was provided by staff of Lake County Public Schools, unless a different source is specifically cited. Source documents and staff resources are described for each table of data in the following study.

Pursuant to F.S. 163.31801 (3) (a), "... the calculation of the impact fee [is required to] be based on the most recent and localized data." In order to fulfill this requirement, this impact fee rate study used the most recent data available from Lake County Public Schools at the time the research was assembled and analyzed for this impact fee rate study.

Data Rounding

The data in this study was prepared using computer spreadsheet software. In some tables in this study, there will be very small variations from the results that would be obtained using a calculator to compute the same data from the number of decimal places reported in the tables in this study. The reason for these insignificant differences is that the spreadsheet software was allowed to calculate results to more places after the decimal than is reported in the tables of these reports. The calculation to extra places after the decimal increases the accuracy of the end results, but causes occasional differences due to rounding of data that appears in this study.

2. NEXUS OF BENEFITS OF EDUCATIONAL FACILITIES

As described in the introduction, there must be a dual nexus between the benefits of educational facilities and new development that is charged an impact fee to pay for a portion of the educational facilities that it needs. This chapter is devoted to an analysis of the nexus.

There are several considerations that affect the "rational nexus of benefits" for educational facility impact fees: (A) responsibility for schools, (B) the need for new educational facilities for new development, (C) the type of property that receives the benefits from new educational facilities, and (D) the location of the property in relation to the new educational facilities.

Responsibility for Schools

The County-wide Lake County Public School system presently consists of 24 elementary schools of which 3 are conversion charter school facilities, 11 middle schools, 7 high schools, 1 conversion charter school facility that houses grades PreK-6, a Pre-K through 12 school facility and 268,368 square feet of ancillary facilities

The School Board of Lake County is legally and financially responsible for the County-wide public school system, therefore the analysis of growth's impact on public schools includes all of the County-wide public school system: no portion of the County or any City in the County is excluded.

The School Board of Lake County is not responsible for private schools or home schooling. The County cannot control access to or usage of schools operated by private organizations or individuals, therefore such facilities are excluded from the analysis of impact fees for educational facilities.

The Need for New Educational Facilities for New Development

Lake County Public Schools, like most school systems, determines its need for educational facilities by comparing its standards for the capacity of various educational facilities to the number of students that it must serve. Local school district standards are based on capacity standards in State Requirements for Educational Facilities (SREF) issued by the Florida Department of Education (FDOE) and applied locally. Specific capacity standards are developed by each School Board and County and included in school concurrency ordinances and programs.

Current Enrollment and Current Capacity

Table 1 compares the current[2] student capacity for grades PreK-12 to the number of students based on the current enrollment (October, 2010) for grades PreK-12 within the Lake County Public School System. The student capacity is based on permanent student stations plus relocatables at schools where the capacity of the dining facility is more than the capacity of permanent student stations (capped at a 25% increase of capacity at each school). This is the standard for student capacity in Lake County's school concurrency ordinance.

The comparison of the current student enrollment to the student capacity required to serve the current student enrollment in Table 1 illustrates that there is a reserve (i.e., current surplus) of elementary, middle and high school student capacity that is available to serve future enrollment growth.

Table 1: Current Enrollment Compared to Current Capacity

	Elementary Schools	Middle Schools	High Schools	Total
Permanent Concurrency Capacity	22,568	11,259	12,071	45,898
Added Funded Concurrency Capacity	0	0	1,879	1,879
Total Funded Concurrency Capacity	22,568	11,259	13,950	47,777
Enrollment (October 2010)	18,720	8,848	11,535	39,103
Capacity Reserve/(Shortage)	3,848	2,411	2,415	8,674

Source: School F.I.S.H. Capacities: 2010-11_LOS_Report_Rev _0-08-10.xls; Added Concurrency Capacity: A7_Current_Construction_(HYC_Version)(DJM_Revised).xlsx; Enrollment: A2_LCS Enrollment 2010-2011_10222010.xlsx

Enrollment Growth and Student Capacity

The rate of growth in enrollment in the Lake County Public Schools has slowed substantially during the past 5 years. From 2005/06 and 2010/11 enrollment increased by 8.4%. The annual rate of growth during this six year period has been steadily declining from 4.3% between 2005/06 and 2006/07 to only 0.1% between 2009/10 and 2010/11 (October of 2010).

[2] Throughout this study, "current" means the 2010/11 school year, the beginning of the most recent 5-year plan adopted by Lake County public Schools. This is because the beginning (i.e., typically October enrollment data) occurs before the school district has built any of the projects in the 5-year program. For Lake schools, the "current year" enrollment and program capacity is for the fall of 2010.

The Lake County Public Schools enrollment projections indicate there will be 40,992 PreK-12 students in the public schools by 2015-16[3], which equals an average annual growth rate of 0.95% from the beginning of the 2010/11 school year. (Note: the forecasts are made using the cohort survival method, which is more accurate than simple percentage increases in growth. For ease of understanding, the results of the cohort survival method are reported here as though they had been calculated by an average annual growth rate of 0.95%.)

Table 2 shows the impact of projected growth on Lake County's school facilities. The data illustrate the increase in enrollment during the next 5 years and demonstrates that the district's recent construction of new schools will provide the capacity to accommodate the students from new dwelling units. In other words, the Lake County Public Schools will utilize a portion of the current surplus of capacity to accommodate the 1,889 additional students forecast for the next five years.

Because Lake County Public Schools can utilize the reserve capacity from schools that it has already built to house the students that will come from new development, the impact fee will reimburse the school district for the investment it made, and the money it borrowed to build the capacity for new development.

Table 2: Enrollment Growth and Student Capacity Needed Next Five Years

	Elementary School	Middle School	High School	Total
Projected PreK-12 Enrollment: 2015	19,806	9,045	12,141	40,992
October, 2010 Enrollment	18,720	8,848	11,535	39,103
Enrollment Growth Next 5 Years	1,086	197	606	1,889
Existing Reserve Capacity	3,848	2,411	2,415	8,674
2015 Capacity Reserve/(Shortage)	2,762	2,214	1,809	6,785

Source: Projected Enrollment: A4LCSforecastsoffutureenrollment.xls dated 9/13/10 and modified 2/14/11 to base on October 2010 40th day count; October, 2010 Enrollment: from Table 1

Types of Property Benefiting from New Educational Facilities

Impact fees are charged to properties that benefit from new educational facilities. Lake County Public Schools are used, for the most part, by individuals

[3] The fall enrollment for the 2015/16 school year is the enrollment for the first year that is five years after the "current" enrollment from the fall of the 2010/2011 school year that is used as the beginning point of this analysis.

rather than businesses or other non-residential land uses. There is insufficient data to objectively allocate the value of the indirect benefit of the school system to non-residential property. Impact fees for educational facilities are charged only to residential development because the dominant stream of benefits redounds to the occupants of dwelling units[4].

Location of Property Receiving Benefits from New Educational Facilities

As described earlier, a nexus of benefits is required between a new dwelling unit and the new educational facilities that are built with the impact fees paid by the new dwelling unit. One method of connecting a house and a school would be to establish impact fee "zones" within the school district. All impact fees paid by new houses in the zone would be required to be spent on new educational facilities in the same zone.

There are several reasons that the use of zones is inappropriate for school impact fees in Lake County. First, the construction of a new school benefits dwelling units that are not in the adjacent area because the new school relieves overcrowding in other schools, which is a significant benefit for those other schools. Each time a new school is constructed, its attendance area boundaries have a ripple effect on the existing attendance areas of neighboring schools.

Second, some facilities and programs of the school district are used for students throughout the district, which makes the use of zones virtually meaningless. There are a variety of magnet and specialty programs offered throughout the district. For example, there are school facilities providing exceptional programs and alternative program schools serving students on a system wide basis. This means that students from a dwelling unit that paid an impact fee may actually attend a facility in another part of the County. Conversely, a new school that is nearest a new dwelling unit may serve some students from other parts of the County.

Third, the Lake County Public Schools presently bus just under 21,500 students to schools located throughout the County. Busing is usually provided for one of several reasons: special education students traveling to centralized facilities, state mandated transportation for students who live more than 2 miles from their school, court-ordered or voluntary busing to achieve racial balance, or students transported to magnet programs. A student who is transported to an educational facility that is some distance from his/her dwelling unit is most directly benefited by

[4] Residential property that is deed-restricted for occupancy by senior citizens is exempt from paying school impact fees.

the educational facility that he/she attends. The educational facility that is nearest his/her dwelling unit may provide little direct benefit to his/her dwelling unit.

Finally, the Florida Supreme Court ruled in the St. Johns County case that "substantially all" of the population of municipalities must join with the unincorporated population in paying educational facility impact fees in order to conform to the constitutional requirement of "a *uniform system* of free public schools" (Article IX, Section 1, Florida Constitution, emphasis added). The use of zones of any kind, whether municipal, school attendance boundaries, or some other basis, conflicts with the ability of the School Board to provide reasonable uniformity in public school physical plants and facilities.

3. COSTS OF EDUCATIONAL FACILITIES PER STUDENT

The first step in determining the impact fee for educational facilities is to calculate the cost per student of various components of educational facilities using Formula 1:

1. $$\frac{\text{Cost of Educational Facility}}{\text{Student Capacity of Educational Facility}} = \text{Cost per Student}$$

There are two variables used in formula 1: (A) the types, levels and costs of educational facilities, and (B) the student capacity of each type and level of educational facility.

Variable (A) Types, Levels and Costs of Educational Facilities

Types

Impact fees for educational facilities in Lake County include six types of costs: school buildings, borrowing costs, land, off-site improvements, ancillary facilities, and transportation (school busses).

Levels

The Lake County Public Schools are structured by grade level: elementary schools serve pre-kindergarten through 5th grade, middle schools serve grades 6 through 8, and high schools serve grades 9 through 12. Schools at each level are designed to meet different educational needs for different numbers of students; therefore, each level is analyzed separately in this study.

Costs

The cost of most of the additional capacity in educational facilities to serve growth will be provided by constructing new facilities, however some capacity may be provided by expanding existing facilities. Throughout this study, any reference to new educational facilities includes expansion of existing facilities as well as construction of new facilities.

Variable (B) Students per Educational Facility

The impact of new development on educational facilities is computed on the basis of capacity (i.e., students per classroom, school, or school bus, according to the

type of educational facility). Each educational facility that was analyzed for the impact fee calculations presented in this study was evaluated for the most recent and local capacity that is available to serve each student enrolled in Lake County Public Schools.

Cost per Student: Tables and Data

The balance of this chapter contains a series of tables and accompanying text that documents and calculates the cost per student of educational facilities. Tables 3 through 9 document each type of educational facility cost: school buildings, borrowing cost to build educational facilities, land costs, off-site costs, ancillary facilities, transportation (school busses) and the revenue credit per student for future debt service payments that new development will pay. Each table includes a separate calculation of data for each educational level: elementary, middle, and high school.

Table 10 lists the results from Tables 3 through 9 and adds them together to calculate the total capital cost of educational facilities per student.

School Building Cost per Student

The school building cost per student for elementary, middle and high school students is shown in Table 3.

The cost of schools in Table 3 is based on Lake County Public Schools' most recent school construction projects: Elementary J (Sorrento); Gray Middle School and High School "BBB" (opening in August of 2011). Costs are the full cost of the school, including design, site preparation, construction materials, labor costs, contractor's pre-construction services, contractor's fees, contractor's risk, builder's risk insurance, performance bond, furniture, technology and equipment, utility connection fees, printing & signage, permitting and construction inspection and testing. The costs do not include land costs or off-site costs (which are analyzed separately in this study).

Table 3: School Building Cost per Student

Cost Item	Elementary School	Middle School	High School
Cost of School	$ 20,844,151	$ 37,227,496	$ 63,350,000
Concurrency Capacity	993	1,283	1,879
School Cost Per Student	20,991.09	29,015.98	33,714.74

Source: A7_Current_Construction_(HYC_Version)(DJM_Revised).

Borrowing Cost per Student

Many school districts borrow money to build new schools and to add capacity at existing schools. The cost of borrowing money is the interest that the school district pays the lender. Lake County Public Schools has borrowed money to pay for new school capacity, therefore borrowing costs are included in the cost basis for calculating the reimbursement impact fee rates.

Table 4 shows the calculation of borrowing (interest) cost per student. The total interest for all debt for each year 2011 through 2031 is divided by the forecast of enrollment for that year[5] to calculate the debt interest per student for each year.

Next, each year's debt interest per student is discounted to present value ($3,003.47) because the money to pay the interest is collected "up front" at the time the impact fee is paid, but the school district will not make the debt service payments until future years.

The final step is to allocate the discounted cost to elementary, middle and high school student costs. This is based on each school level cost per student as a portion of the total of the elementary, middle and high school costs per student from Table 3. For example, the elementary school cost per student in Table 13 ($20,991.09) is divided by the total cost per student for elementary, middle and high schools ($83,721.81) to determine that elementary schools are 25.07% of the cost per student. This is the basis for allocating 25.07% of the debt interest to elementary school costs per student.

[5] The growth in student enrollment for the years 2011 through 2020 is from the Florida Department of Education. The growth rate for 2021 through 2031 assumes the same rate of growth as the 2011 through 2020 forecasts.

Table 4: Borrowing Cost Per Student

Due Date	Total Interest Payments	Total Enrollment	Interest Per Student
2011	$ 16,104,892.53	39,115	$ 411.73
2012	15,624,738.77	39,405	396.52
2013	15,006,406.27	39,684	378.15
2014	14,329,114.40	40,303	355.53
2015	13,502,553.78	40,992	329.39
2016	12,522,126.28	40,711	307.59
2017	11,461,815.03	41,767	274.42
2018	10,324,395.65	43,267	238.62
2019	9,137,256.27	44,076	207.31
2020	8,619,737.51	45,158	190.88
2021	8,066,531.26	45,811	176.08
2022	7,471,375.01	46,474	160.76
2023	6,840,050.01	47,147	145.08
2024	6,342,681.25	47,829	132.61
2025	5,651,868.75	48,521	116.48
2026	4,926,075.00	49,223	100.08
2027	4,170,962.50	49,935	83.53
2028	3,382,062.50	50,658	66.76
2029	2,554,600.00	51,391	49.71
2030	1,699,000.00	52,135	32.59
2031	466,750.00	52,889	8.83
Total			4,162.65
Discount Rate			5.00%
Net Present Value of Debt Payments per Student			3,003.47
	Elementary Portion	25.07%	$ 753.04
	Middle School Portion	34.66%	1,040.93
	High School Portion	40.27%	1,209.50

Source: Debt Interest: A23A24 Lake Debt Analysis 110521.xlsx; Enrollment 2011-2020: A4LCSforecastsoffutureenrollment.xls dated 9/13/10 and modified 2/14/11 to base on October 2010 40th day count; Enrollment 2021-2031: continued using compound annual growth rate between 2011 and 2020.

Land Costs Per Student

The land costs per student are shown in Table 5. The land cost is based on the price paid by Lake County Public Schools for school sites for Elementary J (Sorrento), Middle School DD (East Ridge) and High School BBB. The size of the

property varies by school type and includes land needed for school buildings, playgrounds/athletic fields, auxiliary facilities, parking and on-site storm water retention.

The land cost per type of school is divided by the concurrency capacity for each of the three schools to calculate the land cost per student at each level (elementary, middle and high school).

Table 5: Land Cost Per Student

Cost Item	Elementary School	Middle School	High School
Cost of School Site (Land)	$ 1,000,000	$ 1,500,019	$ 1,517,636
Concurrency Capacity	993	1,591	1,879
Land Cost Per Student	1,007.05	942.82	807.68

Source: Land: Lake County Schools Property Inventory -- March 2010.xls and modified per 3/10/11 and 3/11/11 emails; Concurrency Capacity: School F.I.S.H. Capacities: 2010-11_LOS_Report_Rev _10-08-10.xls

Off-Site Costs Per Student

The off-site costs per student are shown in Table 6. Off-site costs include improvements that are needed for a school but which are "off campus," such as drainage and road improvements. The off-site costs vary significantly according to local circumstances. The elementary school off-site costs are based on actual costs for Elementary J (Sorrento), Minneola, Mascotte, Sawgrass Bay and Grassy Lake elementary schools. Middle school off-site costs are based on actual costs for Middle DD (East Ridge), Carver, and Gray middle schools. The high school off-site cost is based on the actual costs for High School BBB.

The total off-site costs for these schools is divided by the total concurrency capacity of the schools to calculate the off-site costs per elementary, middle and high school student.

Table 6: Off-Site Costs per Student

Cost Item	Elementary School	Middle School	High School
Cost of Off-Site Improvements	$ 997,522	$ 354,983	$ 337,964
Capacity of Schools With Off-Site Costs	5,963	4,052	1,879
Off-Site Cost Per Student	167.29	87.61	179.86

Source: A15_Offsite_Costs_(HYCO_Version).xlsx as modified 4/14/11 per LCSD

Ancillary Facility Cost Per Student

Support facilities that are not located at schools, such as maintenance, storage, transportation and administrative facilities, are called "ancillary" facilities. The cost per student of ancillary facilities is calculated separately from other types of educational facilities. Support facilities that are located at schools, such as cafeterias and principals' offices, are called "auxiliary" facilities. The cost of auxiliary facilities are included in the cost of schools, and are not analyzed separately.

Table 7 shows the calculation of the cost of ancillary facilities per student. Ancillary facilities serve the entire student body, therefore the cost per student is the replacement value of the entire inventory of all ancillary facilities divided by the total enrollment served by the ancillary facilities.

The District's ancillary facilities are analyzed in five categories: office space, warehouse space, warehouse and office space, service garage space, and computer center space. Each category is analyzed separately because it has a different construction cost per square foot.

Building costs are calculated for each of the five categories by adding the square footage of all buildings in a category[6], then multiplying the total by the average cost per square foot of that category of building.

For each category, land costs are calculated separately from building costs. Land costs are calculated by adding the site acreages of each site in a category, then multiplying the total by the average cost of land.

The land and building costs are combined to establish the total value for each category, and the category total values are added together to calculate the grand total value of $37.4 million for all ancillary facilities.

The value per student is calculated by dividing the total value of all ancillary facilities by the total enrollment for 2015 (from Table 2).

[6] The total square footage is adjusted by a factor of 1.4204 to calculate the gross square footage. The source of the adjustment factor is FDOE, SREF Chapter 6 (4) (d).

Table 7: Ancillary Facility Costs per Student

Facility	Location	Acres	Total Net Sq. Ft.	Gross Sq. Ft. @1.4204	Total Value
Office Space					
CV Griffin Education Center	Howey in the Hills	20	59,269	84,186	
District Office	Tavares	2	17,110	24,303	
Dabney Center	Leesburg	4	46,609	66,203	
Howey Education Center	Howey in the Hills	8	12,166	17,281	
LCS Accountability & Program Support	Eustis	3	17,612	25,016	
Office Space Total Gross Sq Ft		37		216,989	
Value per Unit of Land & Building		$ 20,362		$ 94.78	
Value		753,411		20,566,903	$ 21,320,315
Warehouse Space					
Warehouse and Grounds	Tavares	12	41,126	58,415	
Warehouse Space Total Gross Sq Ft		12		58,415	
Value per Unit of Land & Building		$ 20,362		$ 46.94	
Value		244,350		2,741,966	$ 2,986,316
Warehouse & Office Space					
Maintenance Dept. Compound		0			
Warehouse /Office Tot. Gross Sq Ft		0		0	
Value per Unit of Land & Building		$ 20,362		$ 46.94	
Value		0		0	$ 0
Service Garage Space					
Facilities/Maintenance/Transportation	Tavares	4	335,851	50,923	
Groveland Bus Lot	Groveland	4	3,000	4,621	
Leesburg Transportation Facility	Leesburg	7	6,273	8,910	
Service Garage Total Gross Sq Ft		15		64,094	
Value per Unit of Land & Building		$ 20,362		$ 77.61	
Value		305,437		4,974,370	$ 5,279,807
Computer Center Space					
ETS - North Lake County	Tavares	1	7,079	10,055	
ETS - South Lake County	Minneola	1	22,283	31,651	
Computer Center Total Gross Sq Ft		2		41,706	
Value per Unit of Land & Building		$ 20,362		$ 188.51	
Value		40,725		7,861,909	$ 7,902,634
Total Value Ancillary Facilities					$ 37,489,072
÷ Total Projected Enrollment					40,992
Cost Per Student					$ 914.55

Source: Lake County Public Schools A10InventoryofAncillaryFacilities.xls, 1/4/10

School Bus Cost per Student

School busses are analyzed separately from ancillary transportation facilities because of the different usage of busses by students at different levels of schools and the cost of busses are not included in the transportation ancillary facilities. Table 8 shows a series of calculations to calculate the school bus cost per elementary, middle and high school student.

The vehicle cost is the average current cost to Lake County Public Schools to purchase 47, 65 and 77 passenger busses. The types of busses have an overall rated capacity of from 47 to 77 passengers, however the number of students a bus can carry differs depending on the age of the students (i.e., more students per seat for elementary than for middle and high school students). As a result, the busses can carry an average of 64 elementary students, but only 54 middle school and 44 high school students. Table 8 calculates the school bus cost per student separately for each school level. The first step in this calculation is to determine the vehicle cost per elementary, middle and high school student capacity by dividing the vehicle cost by the number of elementary, middle and high school students it can carry.

Next, the cost per student capacity is divided by the average number of runs per bus per day (i.e., 3) in order to allocate bus costs among elementary, middle and high schools. In the final calculation, the apportioned average cost per elementary, middle and high school student is multiplied by the percentage of enrollment at each grade level that rides school busses[7]. The result is the school bus capital cost per student, shown at the bottom of Table 8.

Table 8: School Bus Costs per Student

Cost Items	Elementary School	Middle School	High School
Average Vehicle Cost	$ 97,240.90	$ 97,240.90	$ 97,240.90
Number of Runs per Bus (am or pm)	3	3	3
Vehicle Cost for Grade Level	32,413.63	32,413.63	32,413.63
Average Vehicle Capacity (Students)	64	54	44
Apportioned Average Cost Per Student	506.46	600.25	736.67
Percent of Enrollment Riding Bus	48.44%	71.56%	49.39%
School Bus Capital Cost per Student	245.33	429.54	363.84

Source: A19LCSBusCostsByBusType2010-2011.xls, 11/2/10; A19BUSINVENTORYWCAPACITIES2010.xls, 9/15/10; A17LCSAvgrunsperbus.doc, 9/2/10; A18 LCS Transportation Survey--Ridership Assessment--February 2010.pdf, 9/2/10

[7] The percentage of enrollment riding school busses is based on data compiled by Lake County Public Schools comparing ridership and enrollment during the 2009-10 school year.

Credit Per Student for Other Revenue

The final step in determining the cost of educational facilities per student is to reduce the cost by subtracting any credits for other revenues from new development that the School Board will use to pay for part of the cost of new educational facilities.

Impact fees must be reduced by a "credit" for future taxes and revenues (other than impact fees) that will be paid by new development to pay for the educational facilities needed by growth. The revenue credit calculation ensures that new development does not pay twice for the same benefit (i.e., does not pay impact fees for educational facilities, and also pay taxes or other fees for the same facilities).

The only revenue sources that are required to be credited are those that are available and applied, as a matter of school district policy, to educational facility improvements for new development. Credits are not given for revenues that are used for repair, maintenance or operating costs because impact fees are not used for such expenses.

The credit per student for other sources of revenue is calculated in Table 9 by determining the dollar amount of future bond debt service payments that Lake County Public Schools will use for growth-related educational facility projects. The credit includes all principal and interest on every debt issue with payments due from 2011 through the final payment of each issue[8].

Table 9 lists the future payments of debt service, both principal and interest and the forecast of student enrollment (from Table 4). The total debt per student is calculated by dividing each years' payment by the student enrollment for that year. Each year's debt per student is discounted to present value because the credit is given "up front" at the time the impact fee is paid, but the School District will not receive the debt service payments from new development until future years.

In the final calculation in Table 9 the discounted debt per student is allocated to elementary, middle and high school student costs using the same percentages as were used in Table 4 to calculate the interest cost per student.

[8] The specific debt issues are SBE COBI 2001A, 2002A, 2002B, 2003A, 2005A1, 2005A2, 2005B, 2006A, 2008A, 2009A, and 2009A Refunding; Sales Tax 2003 and 2004; COP 2002A, 2003A, 2004A, 2005A, 2005B, 2006A and 2006B.

Table 9: Revenue Credit Per Student

Due Date	Total Debt Payments	Total Enrollment	Total Debt Per Student
2011	$ 31,739,892.53	39,115	$ 811.45
2012	32,304,738.77	39,405	819.81
2013	32,826,406.27	39,684	827.19
2014	33,369,114.40	40,303	827.96
2015	33,787,553.78	40,992	824.25
2016	34,417,126.28	40,711	845.40
2017	34,846,815.03	41,767	834.31
2018	35,509,395.65	43,267	820.70
2019	20,397,256.27	44,076	462.77
2020	20,364,737.51	45,158	450.97
2021	20,356,531.26	45,811	444.35
2022	20,116,375.01	46,474	432.85
2023	20,055,050.01	47,147	425.37
2024	20,127,681.25	47,829	420.83
2025	20,131,868.75	48,521	414.91
2026	19,966,075.00	49,223	405.62
2027	19,875,962.50	49,935	398.03
2028	19,882,062.50	50,658	392.48
2029	19,579,600.00	51,391	380.99
2030	19,504,000.00	52,135	374.11
2031	19,136,750.00	52,889	361.83
Total			11,976.13
Discount Rate			5.00%
Net Present Value of Debt Payments per Student			7,995.13
	Elementary Portion	25.07%	$ 2,004.57
	Middle School Portion	34.66%	2,770.92
	High School Portion	40.27%	3,219.64

Source: Debt Interest: A23A24 Lake Debt Analysis 110521.xlsx; Enrollment 2011-2020; Enrollment Forecast and school level portion of combined construction cost: From Table 4.

Total Educational Facility Cost per Student

Table 10 repeats the "bottom line" from Tables 3 through 8, and adds those costs to calculate the total capital cost per student for all educational facilities components: school buildings, borrowing , land, off-site costs, ancillary facilities, and school busses. The revenue credit per student from Table 9 is subtracted from the total cost to calculate the net cost per student of educational facilities at the end of Table 10. These costs will be used as the beginning point for calculating the cost per dwelling unit in the next chapter.

Table 10: Total and Net Educational Facility Costs per Student

Cost Items	Elementary School	Middle School	High School
School Buildings	$ 20,991.09	$ 29,015.98	$ 33,714.74
Borrowing	753.04	1,040.93	1,209.50
Land	1,007.05	942.82	807.68
Off-Site	167.29	87.61	179.86
Ancillary Facilities	914.55	914.55	914.55
School Busses	245.33	429.54	363.84
Total Cost per Student	24,078.34	32,431.41	37,190.17
Revenue Credit per Student	2,004.57	2,770.92	3,219.64
Net Cost per Student	22,073.77	29,660.49	33,970.54

Source: Tables 3 – 9.

4. IMPACT FEE PER DWELLING UNIT FOR EDUCATIONAL FACILITIES

The final step in determining the impact fee for educational facilities is to convert the net cost per student to a cost per dwelling unit. The net cost per student is multiplied by the average number of public school students per dwelling unit, to calculate the public school student cost per dwelling unit. The calculation is performed separately for each level of school and each type of dwelling unit. There are three levels of school: elementary, middle and high school. Each level includes its pro rata share of ancillary facilities and school busses. There are three types of dwelling units: single-family, multi-family or mobile home. The cost per dwelling unit is calculated using Formula 2

2.	Net Cost per Student $_L$[9]	x	Students per Dwelling Unit$_T$[10]	=	Impact Fee per Dwelling Unit$_T$

There is one new variable used in formula 2: (C) student per dwelling unit.

Variable (C) Students per Dwelling Unit

The number of public school students per dwelling unit is the factor used to convert the cost of schools per student into cost of schools per dwelling unit.

Different types of dwelling units typically have different numbers of students that live in them. Generally, single-family dwelling units have more students than multi-family dwelling units (i.e., apartments or condominiums) and mobile homes because they house larger families with more students. The data measuring students per dwelling unit will be determined for three types of housing: single-family, multi-family, and mobile home.

Furthermore, each type of dwelling unit has a different number of students at each school level (i.e., elementary, middle, and high school). Generally, there are more elementary students than middle or high school students per dwelling unit because elementary schools educate children for more years than middle or high schools.

Table 11 documents the average number of students from each type of dwelling unit (single-family, multi-family or mobile home) that attend Lake County Public Schools' elementary, middle, and high schools and converts this number to

9 "L" = level of educational facility: elementary, middle, or high school

10 "T" = type of dwelling unit: single-family, multi-family, or mobile home

the average number of students for each type of dwelling unit. Section A of Table 11 shows the current number of dwelling units in Lake County by type of unit (single-family, multi-family, and mobile home) and the number of Lake County elementary, middle and high school students that occupy each type of dwelling unit.

The total single-family, multi-family and mobile home dwelling units are adjusted to exclude the units that are restricted to persons 55 years old or older through deed restrictions on file with the County. These dwelling units will not generate students and therefore will not require school capacity.

Lake County schools matched the street address for each elementary, middle and high school student to the property use codes for the addresses in the Lake County Property Appraiser's database. The results are shown in Section A of Table 11. The use of recent and local enrollment data replaces the census-based data used in the previous impact fee study of 2006.

In Section B, the dwelling unit and enrollment data from Section A is used to calculate the Lake County Public Schools students per dwelling unit. Specifically, the enrollments in each school level were divided by the number of dwelling units that those enrollments occupy. For example, Section A shows that 76,412 single-family houses that were not deed restricted in 2010 housed 13,132 elementary school students. Dividing the number of elementary students by the number of houses calculates the average of 0.172 elementary school students per single-family home, as shown in Section B. The process is repeated for middle school and high school students in single-family homes, and for all school levels in multi-family and mobile homes.

Table 11: Public School Students Per Dwelling Unit

Unit Type	Total Dwelling Units	Elementary School Students	Middle School Students	High School Students	Total School Students
A. Dwelling Units and LCSD Student Population					
Single-Family	76,412	13,132	6,518	8,936	28,586
Multi Family	16,993	2,261	870	872	4,003
Mobile Home	30,915	2,004	892	979	3,875
B. LCSD Students per Dwelling Unit					
Single-Family		0.172	0.085	0.117	0.374
Multi Family		0.133	0.051	0.051	0.235
Mobile Home		0.065	0.029	0.032	0.126

Source: LCSD Step_by_Step_Process_Utilized_for_Student_Generation_Rate_Analysis_--_with_Pre-K_Students.pdf

Impact Fee per Dwelling Unit

The impact fee for each type of dwelling unit is calculated by multiplying the cost per student by the number of students in each type of dwelling unit for the same school level.

The net cost per student for each level of educational facility (from Table 10) is multiplied by the number of public school students per dwelling unit (from Table 11). For example, multiplying the $22,073.77 net cost per elementary school student (from Table 10) by the 0.172 public elementary school students per single-family dwelling unit (from Table 11) produces an elementary school impact fee of $3,796.69 per single-family dwelling unit in Table 12, below[11]. The same formula is applied to each combination of elementary, middle and high schools and single-family, multi family and mobile homes. The resulting impact fees per dwelling unit are listed in the rest of Table 12.

Table 12: Public School Impact Fee per Dwelling Unit

Housing Type	Elementary School	Middle School	High School	Total
Single-family	$ 3,796.69	$ 2,521.14	$ 3,974.55	$ 10,292.38
Multi-family	2,935.81	1,512.69	1,732.50	6,180.99
Mobile Homes	1,434.80	860.15	1,087.06	3,382.01

Source: Tables 10 and 11.

[11] As noted in the Introduction to this study, the data was prepared using computer spreadsheet software. In some tables in this study, there will be very small variations from the results that would be obtained using a calculator to compute the same data.

TOWN OF LADY LAKE
409 FENNELL BOULEVARD
LADY LAKE FL 32159

INSTRUMENT #2014015205
OR BK 4438 PG 2029 - 2031 (3 PGS)
DATE: 2/10/2014 10:49:11 AM
NEIL KELLY, CLERK OF THE CIRCUIT COURT
LAKE COUNTY
RECORDING FEES $27.00

RETURN

ORDINANCE NO. 2014-01

AN ORDINANCE OF THE TOWN COMMISSION OF THE TOWN OF LADY LAKE, FLORIDA, AMENDING CHAPTER 13 OF THE TOWN OF LADY LAKE CODE OF ORDINANCES ENTITLED SPECIAL ASSESSMENTS, IMPACT FEES, SUPPLEMENTAL FEES, SECTION 13-21 ENTITLED LEVY AND PURPOSE, FOR THE PURPOSES OF REDUCING THE SUPPLEMENTAL EDUCATION ASSISTANCE FEE RATES TO 25% OF THE ORIGINAL RATE SET BY ORDINANCE NO. 2006-61; PROVIDING FOR SEVERABILITY; PROVIDING FOR INCLUSION IN THE CODE; PROVIDING FOR FILING; PROVIDING AN EFFECTIVE DATE.

WHEREAS, Chapter 13 of the Lady Lake Code imposes special assessments, impact fees and supplemental fees for Education, Libraries, Parks, Water, Wastewater and Reclaimed Water; and

WHEREAS, the Town Commission wishes to stimulate the local economy by encouraging economic development and promoting job creation through the reduction of supplemental educational assistance fees; and

WHEREAS, supplemental educational assistance fees are applicable to all new residential construction within the Town limits, and can be a substantial component of a developer's total development costs; and

WHEREAS, the Board of County Commissioners of Lake County, Florida, on October 10, 2013, enacted Ordinance No. 2013-55, re-imposing the collection of School Impact Fees at a reduced rate-effective January 13, 2014, and

WHEREAS, in order to stimulate the local economy, it has been determined that the reduction of the collection of supplemental educational assistance fees is necessary; and

WHEREAS, the Town Commission now finds it is in the best interest of the citizens of the Town of Lady Lake to make these changes to the Town Code.

NOW, THEREFORE, BE IT ORDAINED BY THE TOWN COMMISSION OF THE TOWN OF LADY LAKE THAT:

Section 1. Recitals. The foregoing recitals are true and correct and incorporated herein by reference.

Section 2. Amendments. Section 13-21 and Section 13-24, Code of Ordinances of the Town of Lady Lake, is hereby amended to read as follows:

Sec. 13-21. – Levy and purpose.

(a) The reduction of supplemental educational assistance fees shall be for a period beginning January 20, 2014 and extending until January 21, 2015. The reduction shall not apply to pre-payments, deferral agreements unless the agreement specifically allows, or the use of impact fee credits.

(b) For the purpose of helping to defray the costs of new or expanded educational facilities and equipment attributable to new residential construction within the town limits, supplemental educational assistance fees are hereby reduced to 25% of the original rate as set by Ordinance No. 2006-61, beginning January 20, 2014, on new residential construction within the town limits in accordance with the schedule of fees and other provisions of this article.

Sec. 13-24. Rates.

(a) All residential construction occurring within the Town shall pay the following Supplemental Education Assistance Fee:

(1) Seven hundred and fifty dollars ($750.00) per dwelling unit

(2) Four hundred and fifty dollars ($450.00) per multi-family dwellings

(b) The payment of the Supplemental Education Assistance Fee shall be in addition to all other fees, charges or assessments due for the issuance of a building permit or final development order.

(c) The obligation for payment of the Supplemental Education Assistance Fee shall run with the land.

Section 3. Severability. The provisions of this Ordinance are declared to be separable and if any section, sentence, clause or phrase of this Ordinance shall for any reason be held to be invalid or unconstitutional, such decision shall not effect the validity of the remaining sections, sentences, clauses or phrases of this Ordinance, but they shall remain in effect, it being the legislative intent that this Ordinance shall stand notwithstanding the invalidity of any part.

Section 4. Inclusion in the Town of Lady Lake Code. It is the intention of the Town Commission of the Town of Lady Lake that the provisions of this Ordinance shall become and be made a part of the Town of Lady Lake Code of Ordinances and that the sections of this Ordinance may be renumbered or re-lettered and the word "ordinance" may be changed to "section", "article" or such other appropriate word or phrase to accomplish such intentions.

Section 5. Filing. The clerk shall be and is hereby directed forthwith to file this Ordinance in accordance with Florida law.

PASSED AND ORDAINED in the regular session of the Town Commission of the Town of Lady Lake, Lake County, Florida, this 3rd day of **February**, **2014**.

TOWN OF LADY LAKE, FLORIDA

Ruth Kussard

Ruth Kussard, Mayor

ATTEST:

Kris Kollgaard, Town Clerk

APPROVED AS TO FORM:

Derek Schroth, Town Attorney

TOWN OF LADY LAKE
409 FENNELL BOULEVARD
LADY LAKE FL 32159

ORDINANCE NO. 2013-04

OR BK 4322 PG 396 - 397 (2 PGS)
DATE: 5/14/2013 9:29:48 AM
NEIL KELLY, CLERK OF THE CIRCUIT COURT
LAKE COUNTY
RECORDING FEES $18.50

RETURN

AN ORDINANCE OF THE TOWN COMMISSION OF THE TOWN OF LADY LAKE, FLORIDA, AMENDING CHAPTER 13 OF THE TOWN OF LADY LAKE CODE OF ORDINANCES ENTITLED SPECIAL ASSESSMENTS, IMPACT FEES, SUPPLEMENTAL FEES, SECTION 13-21 ENTITLED LEVY AND PURPOSE, FOR THE PURPOSES OF SUSPENDING THE COLLECTION OF SUPPLEMENTAL EDUCATIONAL ASSISTANCE FEES RETROACTIVELY FROM APRIL 1, 2013 UNTIL JANUARY 1, 2014; PROVIDING FOR SEVERABILITY; PROVIDING FOR INCLUSION IN THE CODE; PROVIDING FOR FILING; PROVIDING AN EFFECTIVE DATE OF NINETY DAYS AFTER ADOPTION.

WHEREAS, Chapter 13 of the Lady Lake Code imposes special assessments, impact fees and supplemental fees for Education, Libraries, Parks, Water, Wastewater and Reclaimed Water; and

WHEREAS, the Town Commission wishes to stimulate the local economy by encouraging economic development and promoting job creation through the suspension of supplemental educational assistance fees; and

WHEREAS, supplemental educational assistance fees are applicable to all new residential construction within the Town limits, and can be a substantial component of a developer's total development costs; and

WHEREAS, the Board of County Commissioners of Lake County, Florida, on March 12, 2013 enacted Ordinance No. 2013-14, suspending the collection of educational impact fees from April 1, 2013 until January 1, 2014; and

WHEREAS, in order to stimulate the local economy, it has been determined that the suspension of the collection of supplemental educational assistance fees is necessary; and

WHEREAS, the Town Commission now finds it is in the best interest of the citizens of the Town of Lady Lake to make these changes to the Town Code.

NOW, THEREFORE, BE IT ORDAINED BY THE TOWN COMMISSION OF THE TOWN OF LADY LAKE THAT:

Section 1. Recitals. The foregoing recitals are true and correct and incorporated herein by reference.

Section 2. Amendment. Section 13-21, Code of Ordinances of the Town of Lady Lake, is hereby amended to read as follows:

Sec. 13-21. – Levy and purpose.

(a) The imposition of supplemental educational assistance fees shall be suspended for a period beginning retroactively on April 1, 2013 and extending until January 1, 2014. The suspension shall not apply to pre-payments, deferral

agreements unless the agreement specifically allows, or the use of impact fee credits. Refunds of the supplemental educational assistance fees shall be issued to the current owner of record for fees paid on a permit issued on or after April 1, 2013.

(b) For the purpose of helping to defray the costs of new or expanded educational facilities and equipment attributable to new residential construction within the town limits, supplemental educational assistance fees are hereby levied beginning January 1, 2014 on new residential construction within the town limits in accordance with the schedule of fees and other provisions of this article.

Section 3. Severability. The provisions of this Ordinance are declared to be separable and if any section, sentence, clause or phrase of this Ordinance shall for any reason be held to be invalid or unconstitutional, such decision shall not effect the validity of the remaining sections, sentences, clauses or phrases of this Ordinance, but they shall remain in effect, it being the legislative intent that this Ordinance shall stand notwithstanding the invalidity of any part.

Section 4. Inclusion in the Town of Lady Lake Code. It is the intention of the Town Commission of the Town of Lady Lake that the provisions of this Ordinance shall become and be made a part of the Town of Lady Lake Code of Ordinances and that the sections of this Ordinance may be renumbered or re-lettered and the word "ordinance" may be changed to "section", "article" or such other appropriate word or phrase to accomplish such intentions.

Section 5. Filing. The clerk shall be and is hereby directed forthwith to file this Ordinance in accordance with Florida law.

PASSED AND ORDAINED in the regular session of the Town Commission of the Town of Lady Lake, Lake County, Florida, this **6th** day of **May**, **2013**.

TOWN OF LADY LAKE, FLORIDA

James Richards, Mayor

ATTEST:

Kris Kollgaard, Town Clerk

APPROVED AS TO FORM:

Derek Schroth, Town Attorney

INSTRUMENT #2012065396
OR BK 4178 PG 1031 - 1032 (2 PGS)
DATE: 6/25/2012 11:26:01 AM
NEIL KELLY, CLERK OF THE CIRCUIT COURT
LAKE COUNTY
RECORDING FEES $18.50

ORDINANCE NO. 2012-13

AN ORDINANCE OF THE TOWN COMMISSION OF THE TOWN OF LADY LAKE, FLORIDA, AMENDING CHAPTER 13 OF THE TOWN OF LADY LAKE CODE OF ORDINANCES ENTITLED SPECIAL ASSESSMENTS, IMPACT FEES, SUPPLEMENTAL FEES, SECTION 13-21 ENTITLED LEVY AND PURPOSE, FOR THE PURPOSES OF SUSPENDING THE COLLECTION OF SUPPLEMENTAL EDUCATIONAL ASSISTANCE FEES RETROACTIVELY FROM APRIL 1, 2012 THROUGH APRIL 1, 2013; PROVIDING FOR SEVERABILITY; PROVIDING FOR INCLUSION IN THE CODE; PROVIDING FOR FILING; PROVIDING AN EFFECTIVE DATE OF NINETY DAYS AFTER ADOPTION.

WHEREAS, Chapter 13 of the Lady Lake Code imposes special assessments, impact fees and supplemental fees for Education, Libraries, Parks, Water, Wastewater and Reclaimed Water; and

WHEREAS, the Town Commission wishes to stimulate the local economy by encouraging economic development and promoting job creation through the suspension of supplemental educational assistance fees; and

WHEREAS, supplemental educational assistance fees are applicable to all new residential construction within the Town limits, and can be a substantial component of a developer's total development costs; and

WHEREAS, the Board of County Commissioners of Lake County, Florida, on March 13, 2012 enacted Ordinance No. 2012-15, suspending the collection of educational impact fees from April 1, 2012 through April 1, 2013; and

WHEREAS, in order to stimulate the local economy, it has been determined that the suspension of the collection of supplemental educational assistance fees is necessary; and

WHEREAS, the Town Commission now finds it is in the best interest of the citizens of the Town of Lady Lake to make these changes to the Town Code.

NOW, THEREFORE, BE IT ORDAINED BY THE TOWN COMMISSION OF THE TOWN OF LADY LAKE THAT:

Section 1. Recitals. The foregoing recitals are true and correct and incorporated herein by reference.

Section 2. Amendment. Section 13-21, Code of Ordinances of the Town of Lady Lake, is hereby amended to read as follows:

Sec. 13-21. – Levy and purpose.

(a) The imposition of supplemental educational assistance fees shall be suspended for a period beginning retroactively on April 1, 2012 and

RETURN TO
TOWN OF LADY LAKE
409 FENNELL BOULEVARD
LADY LAKE FL 32159

extending through April 1, 2013. The suspension shall not apply to pre-payments, deferral agreements unless the agreement specifically allows, or the use of impact fee credits. Refunds of the supplemental educational assistance fees shall be issued to the current owner of record for fees paid on a permit issued on or after April 1, 2012.

(b) For the purpose of helping to defray the costs of new or expanded educational facilities and equipment attributable to new residential construction within the town limits, supplemental educational assistance fees are hereby levied beginning April 2, 2013 on new residential construction within the town limits in accordance with the schedule of fees and other provisions of this article.

Section 3. Severability. The provisions of this Ordinance are declared to be separable and if any section, sentence, clause or phrase of this Ordinance shall for any reason be held to be invalid or unconstitutional, such decision shall not effect the validity of the remaining sections, sentences, clauses or phrases of this Ordinance, but they shall remain in effect, it being the legislative intent that this Ordinance shall stand notwithstanding the invalidity of any part.

Section 4. Inclusion in the Town of Lady Lake Code. It is the intention of the Town Commission of the Town of Lady Lake that the provisions of this Ordinance shall become and be made a part of the Town of Lady Lake Code of Ordinances and that the sections of this Ordinance may be renumbered or re-lettered and the word "ordinance" may be changed to "section", "article" or such other appropriate word or phrase to accomplish such intentions.

Section 5. Filing. The clerk shall be and is hereby directed forthwith to file this Ordinance in accordance with Florida law.

PASSED AND ORDAINED in regular session of the Town Commission of the Town of Lady Lake, Lake County, Florida, this 18th day of June, 2012.

TOWN OF LADY LAKE, FLORIDA

James Richards, Mayor

ATTEST:

Kris Kollgaard, Town Clerk

APPROVED AS TO FORM:

Derek Schroth, Town Attorney

TOWN OF LADY LAKE
INCORPORATED
1925
FLORIDA

TOWN OF LADY LAKE
409 FENNELL BOULEVARD
LADY LAKE, FL 32159

CFN 2006114001
Bk 03221 Pgs 1123 - 1128; (6pgs)
DATE: 07/27/2006 10:13:19 AM
JAMES C. WATKINS, CLERK OF COURT
LAKE COUNTY
RECORDING FEES 52.50

ORDINANCE NO. 2006-61

AN ORDINANCE OF THE TOWN COMMISSION OF THE TOWN OF LADY LAKE, FLORIDA, PROVIDING FOR SUPPLEMENTAL EDUCATION ASSISTANCE FEE RATES; PROVIDING FOR SEVERABILITY; PROVIDING FOR REPEAL OF ALL ORDINANCES IN CONFLICT HEREWITH INCLUDING REPEAL OF ORDINANCE 2005-41 AND ORDINANCE 2005-49; PROVIDING FOR AN EFFECTIVE DATE.

WHEREAS, the Town of Lady Lake continues to develop, expand by annexation, and experience increased development of property currently within the municipal boundaries; and

WHEREAS, the Lake County School Board has undertaken a reasonable analysis for the determination of the impact of new development on the need for and costs of additional educational facilities and capital improvements in Lake County; and

WHEREAS, the Town of Lady Lake has adopted a comprehensive plan which requires the Town to plan for the financial requirements of growth and intensified uses; and

WHEREAS, the imposition of education assistance fees is seen as a proper means of requiring growth to help defray the capital expenditures necessary by such growth; and

WHEREAS, the Lake County School Board has attempted to prohibit municipalities from collecting Supplemental Education Assistance Fees and allocating such fees to Charter Schools and thus, specific authorization for use of Supplemental Education Assistance Fees to Charter Schools, or such other legally permissible causes is necessary to assist in avoiding costly litigation by the Lake County School Board; and

WHEREAS, the Town expressly desires to have the flexibility to allocate its Supplemental Education Assistance Fees to Charter Schools or such other legally permissible causes should the Town Commission determine that it is in Lady Lake's best interests and promotes the good welfare of the Town; and

WHEREAS, it was and remains the express intent of the Town of Lady Lake to allocate all funds held in the Supplemental Education Assistance Fee Trust Account to whatever legally permitted uses the Town Commission desires; and

WHEREAS, the School Facilities Steering Committee as of January 24, 2006 recommended by unanimous vote to reduce the Supplemental School Impact Fees for multi-family dwelling units only from $3,000.00 to sixty percent (60%) of the $3,000 existing fee for an amount of $1,800.00.

NOW, THEREFORE, BE IT ORDAINED BY THE TOWN COMMISSION OF THE TOWN OF LADY LAKE THAT:

Section 1. Findings

1. The Board of County Commissioners of Lake County has adopted an educational system impact fee which requires future residential construction to contribute its fair share of the cost of capital improvements and additions to the educational system which are necessary to accommodate such growth.

2. The Lake County School Board has determined that the Lake County educational system impact fee, ad valorem tax revenue and other revenues will not be sufficient to provide the

capital improvements and additions to the educational system which are necessary to accommodate such growth.

3. The implementation of a Supplemental Education Assistance Fee to require future growth to contribute its fair share of the cost of growth necessitated capital improvements to the educational system promotes the general welfare of the citizens of the Town of Lady Lake. The provision of educational facilities which are adequate for the needs of growth is in the general welfare of all city residents and constitutes a public purpose.

4. The implementation of a Supplemental Educational Assistance Fee to require future growth to contribute its fair share of the cost of required capital improvements and additions is an integral and vital element of the regulatory plan of growth management in the Town.

5. The required improvements and additions to the educational system needed to eliminate any existing deficiencies shall be financed by revenue sources of the school board other than educational system impact fees.

6. The imposition of fees has been identified as one of the preferred methods of ensuring that development bears a proportionate share of the cost of capital facilities necessary to accommodate such development. Allocation of a proportionate share of costs for new development promotes and protects the public health, safety and welfare of the citizens of the Town of Lady Lake.

7. The report entitled "Impact Fees for Educational Facilities in Lake County, Florida: prepared by Henderson, Young & Company" sets forth a reasonable methodology and analysis for the determination of the impact of new residential development on the need for and costs for additional educational facilities and capital improvements in Lake County.

Section 2. Town of Lady Lake Supplemental Education Assistant Fee Levy and Purpose

For the purpose of helping to defray the costs of new or expanded educational facilities and equipment attributable to new residential construction within the town limits, Supplemental Educational Assistance Fees are hereby levied on new residential construction within the town limits in accordance with the Schedule of Fees and other provisions of this Article.

Section 3. Applicability

This Article shall apply to all new residential construction within the town limits except the following:

(A) Remodeling, rebuilding or making additions to a residential structure that does not create an additional dwelling unit;

(B) Construction of any public-purpose structure by the Town of Lady Lake or any agency, subdivision or instrumentality thereof; and construction of any other public-purpose structure by Federal, State, or local government with legislative exemption from such fee;

(C) Construction of accessory buildings not containing bedrooms;

(D) The replacement of a destroyed or partially destroyed dwelling unit on the same site with a new dwelling unit of the same size and use;

(E) The installation of a replacement mobile home on the same site when a fee for such mobile home site has previously been paid;

(F) Non-residential buildings or structures or the installation of a non-residential mobile home;

(G) The replacement of a conventionally built home with a conventionally built home when a conventionally built home legally existed on such site and has been moved to another site;

(H) Any Residential Construction that qualifies as Housing for Older Persons and meets the following requirements shall be exempt from payment of the Supplemental Education Assistance Fee imposed pursuant to Section 6;

1. Any Person seeking an exemption from the Supplemental Education Assistance Fee as Housing for Older Persons shall file with the Town an application for exemption prior to receiving a building permit, or if no building permit is required, prior to receiving a development permit for the proposed residential construction. The application for exemption shall contain the following:

   (i) The name and address of the owner or authorized agent;

   (ii) The legal description of the residential construction;

   (iii) Evidence that the residential construction is within a community or subdivision that is operated as a Housing for Older Persons in compliance with the terms and provisions of the Federal Fair Housing Act Title VIII of the Civil Rights Acts of 1968, as amended by the Fair Housing Amendments Act of 1988 and the Housing for Older Persons Act of 1995, 42 D.S.C. 99 3601-19 or its statutory successor in function; and

   (iv) A copy of the recorded declaration of covenants and restrictions that run with the land, cannot be revoked or amended for a period of at least 30 years from recording, and that prohibit any person under the age of 18 years of age from residing within any dwelling unit on the property as a permanent resident.

2. If the residential construction meets the requirements for the Housing for Older Persons exemption, the Town Attorney shall issue an exemption. The exemption shall be presented in lieu of payment of the Supplemental Education Assistance Fee.

   (i) The amount of the Supplemental Education Assistance Fee shall not be increased to replace any revenue lost due to the Housing for Older Persons Exemption.

   (ii) In the event the recorded declaration of covenants and restrictions is breached or otherwise modified following recording such that persons under the age of 18 are allowed to reside as permanent residents in any residential dwelling unit receiving a Housing for Older Persons exemption, the Supplemental Education Assistance Fee in effect at the time of the change in circumstances shall be due for all Dwelling Units within the community.

Section 4. Review of Fee Amounts

The Supplemental Education Assistance Fee shall be determined and reviewed every year in accordance with the cost of any expanded or new capital facilities and equipment for education facilities and capital improvement generated by new residential construction and the money otherwise available to meet such costs. The Town Commission may annually adjust the established fee rate to reflect changes in the costs of relevant capital facilities, capital improvement, and equipment. All changes or adjustments in the established fee rate shall be made by Ordinance or Resolution after

advertising and public hearings and shall apply only to residential construction for which building permits are issued after the effective date of such ordinance.

Section 5. Rates

All residential construction occurring within the Town shall pay the following Supplemental Education Assistance Fee:

$3,000 per dwelling unit

$1,800 per multi-family dwellings

The payment of the Supplemental Education Assistance Fee shall be in addition to all other fees, charges or assessments due for the issuance of a building permit or final development order.

The obligation for payment of the Supplemental Education Assistance Fee shall run with the land.

Section 6. Use of Supplemental Education Assistance Fees

(A) Any Supplemental Education Assistance Fee collected by the Town shall be held by them in a trust account separate and distinct from all other revenues. The Supplemental Education Assistance Fee funds shall be held by the Town until a request for funds is received from the Lake County School Board. Any transfer of funds to the school board shall be subject to Town Commission approval All transferred funds shall be held by the school board in the Supplemental Education Assistance Fee Trust Account. Five (5%) percent of the funds collected shall be retained by the Town as an administrative fee for collecting and transmitting the funds.

(B) Supplemental Education Assistance Fees shall, upon receipt by the school board, be deposited in a separate trust account established and maintained by the school board. Such account shall be designated as the "Supplemental Education Assistance Fee Trust Account" and shall be maintained separate and apart from all other accounts of the school board.

(C) The school board shall maintain adequate records to justify all expenditures from the Supplemental Education Assistance Fee Trust Account. Upon reasonable notice, the Town shall have access to such books, records and documents relating to the Supplemental Education Assistance Fee Trust Account for the purpose of inspection or audit. The Town has the right, but not the duty, to audit the school board's Supplemental Education Assistance Fee Trust Account at the Town's sole cost and expense.

(D) The monies deposited into the Supplemental Education Assistance Fee Trust Account shall be used solely in the Town of Lady Lake's utility service area boundary for the purpose of providing growth-necessitated capital improvements to educational plants and ancillary plants of the educational system including, but not limited to:

1. Land acquisition, including any cost of acquisition;

2. Fees for professional services, including but not limited to architecture, engineering, surveying, feasibility determinations, landscaping, soils and material testing, legal appraisals, and construction management;

3. Design and construction documents;

4. Site development, site –related improvements and improvements incidental to the construction thereto; on-site and off-site.

5. Any permitting or application fees necessary for the construction;

6. Design and construction of educational plants and ancillary plants;

7. Design and construction of drainage facilities required by the construction of educational plants and ancillary plants or improvements thereto;

8. Relocating utilities required by the construction of educational plants and ancillary plants or improvements or additions thereto;

9. Acquisition of furniture and equipment necessary to accommodate students, faculty, administrators, staff and the activities of the educational programs and services at educational plants which are necessitated by growth;

10. Payment of principal and interest, necessary reserves and costs of issuance under any bonds or other indebtedness issued by the school board to fund growth-necessitated improvements and additions to the educational system.

Section 7. Permissible Allocation of Funds

All funds held in the Supplemental Education Assistance Fee Trust Account may be allocated to fund Charter Schools or allocated to other such legally permissible causes as the Town Commission directs. The Town of Lady Lake is not required to remit any fees to the Lake County School Board, but may should it decide to do so.

Section 8. Time of Payment; Remedies for Nonpayment

The Supplemental Education Assistance Fee shall be due and payable at the time of issuance by the Town Growth Management Department of a building permit or mobile home tie down permit and shall not be refundable once such permit has been issued. No building permit or mobile home tie down permit shall be issued until all applicable fees have been received by the Town of Lady Lake.

Section 9. Repeal of Prior Ordinances

Ordinance 2005-41 and Ordinance 2005-49 are hereby repealed in their entirety. Any ordinance which conflicts with this ordinance is inferior and this ordinance shall control and supercede over any conflicting prior ordinance.

Section 10. Severability

The provisions of this Ordinance are declared to be separable and if any section, sentence, clause or phrase of this Ordinance shall for any reason be held to be invalid or unconstitutional, such decision shall not effect the validity of the remaining sections, sentences, clauses or phrases of this Ordinance, but they shall remain in effect, it being the legislative intent that this Ordinance shall stand nothwithstanding the invalidity of any part.

Section 11. Inclusion in the Town of Lady Lake Code

It is the intention of the Town Commission of the Town of Lady Lake that the provisions of this Ordinance shall become and be made a part of the Town of Lady Lake Code of Ordinances and that the sections of this Ordinance may be renumbered or re-lettered and the word "ordinance" may be changed to "section", "article" or such other appropriate word or phrase to accomplish such intentions

Section 12. Effective Date

This ordinance shall become effective immediately upon final reading and adoption by the Town Commission of Town of Lady Lake, Florida as provided by law.

PASSED AND ORDAINED in regular session of the Town Commission of the Town of Lady Lake, Lake County, Florida, this 20th day of July, 2006.

HONORABLE MAX PULLEN, MAYOR
Town of Lady Lake, Florida

ATTEST:

Kristen Straka
Town Clerk

Derek Schroth
Interim Town Attorney

Passed First Reading _____

Passed Second Reading 7/20/06

Town of Lady Lake

CFN 2005172417
Bk 02994 Pgs 0834 - 835; (2pgs)
DATE: 11/02/2005 11:15:03 AM
JAMES C. WATKINS, CLERK OF COURT
LAKE COUNTY
RECORDING FEES 18.50

ORDINANCE NO. 2005-49

AN ORDINANCE OF THE TOWN COMMISSION OF THE TOWN OF LADY LAKE, FLORIDA, TO EXPRESSLY PROVIDE FOR THE ABILITY TO ALLOCATE SUPPLEMENTAL EDUCATION ASSISTANCE FEES TO CHARTER SCHOOLS OR SUCH OTHER LEGALLY PERMISSIBLE CAUSES, PROVIDING FOR SEVERABILITY; PROVIDING AN EFFECTIVE DATE.

WHEREAS, the Town of Lady Lake has adopted an Ordinance providing for Supplemental Education Assistance Fees and the retention of such fees by the Town in a separate and distinct trust account for use as determined by the Town Commission; and

WHEREAS, the Lake County School Board has attempted to prohibit municipalities from collecting Supplemental Education Assistance Fees and allocating such fees to Charter Schools and thus, specific authorization for use of Supplemental Education Assistance Fees to Charter Schools or such other legally permissible causes is necessary to assist in avoiding costly litigation by the Lake County School Board; and

WHEREAS, the Town expressly desires to have the flexibility to allocate its Supplemental Education Assistance Fees to Charter Schools or such other legally permissible causes should the Town Commission determine that it is in Lady Lake's best interests and promotes the good welfare of the Town.

NOW, THEREFORE, BE IT ORDAINED BY THE TOWN COMMISSION OF THE TOWN OF LADY LAKE THAT:

Section 1. Permissible Allocation of Funds

All funds held in the Supplemental Education Assistance Fee Trust Account may be allocated to fund Charter Schools or allocated to other such legally permissible causes as the Town Commission directs. The Town of Lady Lake is not required to remit any fees to the Lake County School Board, but may should it decide to do so.

Section 2. Conflicting Provisions Repealed

Should a Court of competent jurisdiction determine that this Ordinance conflicts with any provision of Ordinance 2005-41 which established Supplemental Education Assistance Fees, this Ordinance shall control and supersede the conflicting provision of Ordinance 2005-41, if any. It was and remains the express intent of the Town of Lady Lake to allocate all funds held in the Supplemental Education Assistance Fee Trust Account to whatever legally permitted uses the Town Commission desires.

Section 3. Severability

The provisions of this Ordinance are declared to be separable and if any section, sentence, clause or phrase of this Ordinance shall for any reason be held to be invalid or unconstitutional, such decision shall not effect the validity of the remaining sections, sentences, clauses or phrases of this Ordinance, but they shall remain in effect, it being the legislative intent that this Ordinance shall stand nothwithstanding the invalidity of any part.

Section 4. Inclusion in the Town of Lady Lake Code

It is the intention of the Town Commission of the Town of Lady Lake that the provisions of this Ordinance shall become and be made a part of the Town of Lady Lake Code of Ordinances and that the sections of this Ordinance may be renumbered or re-lettered and the word "ordinance" may be changed to "section", "article" or such other appropriate word or phrase to accomplish such intentions.

Section 5. Effective Date

This ordinance shall become effective immediately upon final reading and adoption by the Town Commission of Town of Lady Lake, Florida as provided by law.

PASSED AND ORDAINED in regular session of the Town Commission of the Town of Lady Lake, Lake County, Florida, this 20th day of October, 2005.

Ty Miller, Mayor Pro-Tem
Town of Lady Lake, Florida

ATTEST:

Sue Gay
Town Clerk

Derek Schroth
Town Attorney

Passed First Reading 10-6-05

Passed Second Reading 10-20-05

CFN 2005136505
OR 02935 Pgs 0717 - 722; (6pgs)
DATE: 08/31/2005 02:11:55 PM
JAMES C. WATKINS, CLERK OF COURT
LAKE COUNTY
RECORDING FEES 52.50

TOWN OF LADY LAKE
409 FENNELL BOULEVARD
LADY LAKE, FL 32159

ORDINANCE NO. 2005-41

AN ORDINANCE OF THE TOWN COMMISSION OF THE TOWN OF LADY LAKE, FLORIDA, TO PROVIDE FOR SUPPLEMENTAL EDUCATION ASSISTANCE FEES, FINDING A NEED FOR SUPPLEMENTAL EDUCATION ASSISTANCE FEES; PROVIDING FOR THE SETTING OF SUPPLEMENTAL EDUCATION ASSISTANCE FEE RATES; PROVIDING FOR SEVERABILITY; PROVIDING AN EFFECTIVE DATE.

WHEREAS, the Town of Lady Lake continues to develop and expand by annexation and by increased development of property currently within the municipal boundaries; and

WHEREAS, the Lake County School Board has undertaken a reasonable analysis for the determination of the impact of new development on the need for and costs of additional educational facilities and capital improvements in Lake County; and

WHEREAS, the Town of Lady Lake has adopted a comprehensive plan which requires the Town to plan for the financial requirements of growth and intensified uses:

WHEREAS, the imposition of education assistance fees is seen as a proper means of requiring growth to help defray the capital expenditures necessary by such growth.

NOW, THEREFORE, BE IT ORDAINED BY THE TOWN COMMISSION OF THE TOWN OF LADY LAKE THAT:

Section 1. Findings

1. The Board of County Commissioners of Lake County has adopted an educational system impact fee which requires future residential construction to contribute its fair share of the cost of capital improvements and additions to the educational system which are necessary to accommodate such growth.

2. The Lake County School Board has determined that the Lake County educational system impact fee, ad valorem tax revenue and other revenues will not be sufficient to provide the capital improvements and additions to the educational system which are necessary to accommodate such growth.

3. The implementation of a Supplemental Education Assistance Fee to require future growth to contribute its fair share of the cost of growth necessitated capital improvements to the educational system promotes the general welfare of the citizens of the Town of Lady Lake. The provision of educational facilities, which are adequate for the needs of growth, is in the general welfare of all Town residents and constitutes a public purpose.

4. The implementation of a Supplemental Educational Assistance Fee to require future growth to contribute its fair share of the cost of required capital

improvements and additions is an integral and vital element of the regulatory plan of growth management in the Town.

5. The required improvements and additions to the educational system needed to eliminate any existing deficiencies shall be financed by revenue sources of the school board other than educational system impact fees.

6. The imposition of fees has been identified as one of the preferred methods of ensuring that development bears a proportionate share of the cost of capital facilities necessary to accommodate such development. Allocation of a proportionate share of costs for new development promotes and protects the public health, safety and welfare of the citizens of the Town of Lady Lake.

7. The report entitled "Impact Fees for Educational Facilities in Lake County, Florida: prepared by Henderson, Young & Company" sets forth a reasonable methodology and analysis for the determination of the impact of new residential development on the need for and costs for additional educational facilities and capital improvements in Lake County.

Section 2. The Town of Lady Lake Supplemental Education Assistance Fee

1. Levy and Purpose

For the purpose of helping to defray the costs of new or expanded educational facilities and equipment attributable to new residential construction within the town limits, Supplemental Educational Assistance Fees are hereby levied on new residential construction within the town limits in accordance with the Schedule of Fees and other provisions of this Article.

2: Applicability

This Article shall apply to all new residential construction within the town limits except the following:

(A) Remodeling, rebuilding or making additions to a residential structure that does not create an additional dwelling unit;

(B) Construction of any public-purpose structure by the Town of Lady Lake or any agency, subdivision or instrumentality thereof; and construction of any other public-purpose structure by Federal, State, or local government with legislative exemption from such fee;

(C) Construction of accessory buildings not containing bedrooms;

(D) The replacement of a destroyed or partially destroyed dwelling unit on the same site with a new dwelling unit of the same size and use;

(E) The installation of a replacement mobile home on the same site when a fee for such mobile home site has previously been paid;

(F) Non-residential buildings or structures or the installation of a non-residential mobile home;

(G) The replacement of a conventionally built home with a conventionally built home when a conventionally built home legally existed on such site and has been moved to another site;

(H) Any Residential Construction that qualifies as Housing for Older Persons and meets the following requirements shall be exempt from payment of the Supplemental Education Assistance Fee imposed:

1. Any Person seeking an exemption from the Supplemental Education Assistance Fee as Housing for Older Persons shall file with the Town an application for exemption prior to receiving a building permit, or if no building permit is required, prior to receiving a development permit for the proposed residential construction. The application for exemption shall contain the following:

   (i) The name and address of the owner or authorized agent;

   (ii) The legal description of the residential construction;

   (iii) Evidence that the residential construction is within a community or subdivision that is operated as a Housing for Older Persons in compliance with the terms and provisions of the Federal Fair Housing Act Title VIII of the Civil Rights Acts of 1968, as amended by the Fair Housing Amendments Act of 1988 and the Housing for Older Persons Act of 1995, 42 D.S.C. 99 3601-19 or its statutory successor in function; and

   (iv) A copy of the recorded declaration of covenants and restrictions that run with the land, cannot be revoked or amended for a period of at least 30 years from recording, and that prohibit any person under the age of 18 years of age from residing within any dwelling unit on the property as a permanent resident.

2. If the residential construction meets the requirements for the Housing for Older Persons exemption, the Town Attorney shall issue an exemption. The exemption shall be presented in lieu of payment of the Supplemental Education Assistance Fee.

   (i) The amount of the Supplemental Education Assistance Fee shall not be increased to replace any revenue lost due to the Housing for Older Persons Exemption.

   (ii) In the event the recorded declaration of covenants and restrictions is breached or otherwise modified following recording such that persons under the age of 18 are allowed to reside as permanent residents in any residential dwelling unit receiving a Housing for Older Persons exemption, the Supplemental Education Assistance Fee in effect at the time of the change in circumstances shall be due for all Dwelling Units within the community.

3: Review of Fee Amounts

The Supplemental Education Assistance Fee shall be determined and reviewed every year in accordance with the cost of any expanded or new capital facilities and equipment for education facilities and capital improvement generated by new residential construction and the money otherwise available to meet such costs. The Town Commission may annually adjust the established fee rate to reflect changes in the costs of relevant capital facilities and equipment. All changes or adjustments in the established fee rate shall be made by Ordinance or Resolution after advertising and public hearings and shall apply only to residential construction for which building permits are issued after the effective date of such ordinance.

4: Rates

All residential construction occurring within the Town shall pay the following Supplemental Education Assistance Fee:

$3,000 per dwelling unit

The payment of the Supplemental Education Assistance Fee shall be in addition to all other fees, charges or assessments due for the issuance of a building permit or final development order.

The obligation for payment of the Supplemental Education Assistance Fee shall run with the land.

5: Use of Supplemental Education Assistance Fees

(A) Any Supplemental Education Assistance Fee collected by the Town shall be held by them in a trust account separate and distinct from all other revenues. The Supplemental Education Assistance Fee funds shall be held by the Town until a request for funds is received from the Lake County School Board and approved by the Town Commission. Any transfer of funds to the school board shall be subject to Town Commission approval. All transferred funds shall be held by the school board in the Supplemental Education Assistance Fee Trust Account. Five (5%) percent of the funds collected shall be retained by the Town as an administrative fee for collecting and transmitting the funds.

(B) Supplemental Education Assistance Fees shall, upon receipt by the school board, be deposited in a separate trust account established and maintained by the school board. Such account shall be designated as the "Supplemental Education Assistance Fee Trust Account" and shall be maintained separate and apart from all other accounts of the school board.

(C) The school board shall maintain adequate records to justify all expenditures from the Supplemental Education Assistance Fee Trust Account. Upon reasonable notice, the Town shall have access to such books, records and documents relating to the Supplemental Education Assistance Fee Trust Account for the purpose of inspection or audit. The Town has the right, but not the duty, to audit the school board's Supplemental Education Assistance Fee Trust Account at the Town's sole cost and expense.

(D) The monies deposited into the Supplemental Education Assistance Fee Trust Account shall be used solely in the Town of Lady Lake's utility service area boundary for the purpose of providing growth-necessitated capital improvements to educational plants and ancillary plants of the educational system including, but not limited to:

1. Land acquisition, including any cost of acquisition;

2. Fees for professional services, including but not limited to architecture, engineering, surveying, landscaping, soils and material testing, legal appraisals, and construction management;

3. Design and construction documents;

4. Site development, site–related improvements and improvements incidental to the construction thereto; on-site and off-site.

5. Any permitting or application fees necessary for the construction;

6. Design and construction of educational plants and ancillary plants;

7. Design and construction of drainage facilities required by the construction of educational plants and ancillary plants or improvements thereto;

8. Relocating utilities required by the construction of educational plants and ancillary plants or improvements or additions thereto;

9. Acquisition of furniture and equipment necessary to accommodate students, faculty, administrators, staff and the activities of the educational programs and services at educational plants which are necessitated by growth;

10. Payment of principal and interest, necessary reserves and costs of issuance under any bonds or other indebtedness issued by the school board to fund growth-necessitated improvements and additions to the educational system.

6: Time of Payment; Remedies for Nonpayment

The Supplemental Education Assistance Fee shall be due and payable at the time of issuance by the Town Growth Management Department of a building permit or mobile home tie down permit and shall not be refundable once such permit has been issued. No building permit or mobile home tie down permit shall be issued until all applicable fees have been received by the Town of Lady Lake.

Section 4. Severability

The provisions of this Ordinance are declared to be separable and if any section, sentence, clause or phrase of this Ordinance shall for any reason be held to be invalid or unconstitutional, such decision shall not effect the validity of the remaining sections, sentences, clauses or phrases of this Ordinance, but they shall remain in effect, it being

the legislative intent that this Ordinance shall stand nothwithstanding the invalidity of any part.

Section ~~4~~ 5. Inclusion in the Town of Lady Lake Code

The Town Commission of the Town of Lady Lake intends that the provisions of this Ordinance shall become and be made a part of the Town of Lady Lake Code of Ordinances and that the sections of this Ordinance may be renumbered or re-lettered and the word "ordinance" may be changed to "section", "article" or such other appropriate word or phrase to accomplish such intentions

Section ~~5~~ 6. Effective Date

This ordinance shall become effective immediately upon final reading and adoption by the Town Commission of Town of Lady Lake, Florida as provided by law.

PASSED AND ORDAINED in regular session of the Town Commission of the Town of Lady Lake, Lake County, Florida, this 25th day of August, 2005.

HONORABLE MAX PULLEN, MAYOR
Town of Lady Lake, Florida

ATTEST:

Sue Gay
Town Clerk

Derek Schroth
Town Attorney

Passed First Reading 8-4-05

Passed Second Reading 8-25-05

M-12

TOWN COMMISSION AGENDA ITEM

REQUESTED COMMISSION MEETING DATE: March 2, 2015

SUBJECT: Consideration of One Appointment/Reappointment to the Parks, Recreation and Tree Advisory Committee

DEPARTMENT: Clerk's Office

STAFF RECOMMENDED MOTION: Appointment/Reappointment of One Member to the Parks, Recreation and Tree Advisory Committee

SUMMARY: The Town Commission approved the second/final reading of Ordinance No. 2014-04 at the July 7, 2014 meeting which resulted in a merger of the Parks & Recreation Advisory Board and the Tree & Beautification Advisory Committee into one board – the Parks, Recreation and Tree Advisory Committee. As a result of the merge, there were seven members, which was to be reduced to five through attrition. Since that time, two members have resigned and one member's term (Connie Merrell-Kasch) expired in February, 2015.

Ms. Connie Merrell-Kasch wishes to be reappointed, and there is also one new application from Richard Jones on file for consideration for appointment to this board.

FISCAL IMPACT: N/A

[ ] **Capital Budget**
[ ] **Operating**
[ ] **Other**

ATTACHMENTS: [ ] **Ordinance** [ ] **Resolution** [ ] **Budget Resolution**

[ ] **Other** [X] **Support Documents – Applications**

DEPARTMENT HEAD	**Submitted**	**Date**
HR	**Approved as to form**	**Date**
FINANCE DEPARTMENT	**Approved as to Budget Requirements**	**Date**
TOWN MANAGER	**Approved Agenda Item for:** 3-2-15	**Date** 2-24-15

COMMISSION ACTION:

[ ] **Approved as Recommended** [ ] **Disapproved** [ ] **Tabled Indefinitely**

[ ] **Continued to Date Certain** [ ] **Approved with Modification**

TOWN OF LADY LAKE
BOARDS/COMMITTEES APPLICATION

Date: 2/8/11

Name: Connie Merrell-Kasch

Mailing Address: 623 Fourth Ave Lady Lake FL 32159

Location of residence: Lady Lake

Business Location (if applicable): _____
(Economic Development Advisory Committee only) 787-5032

Home Phone: (352) 217-8863 **Work Phone:** (352) 360-7228 ~~750-3311~~

Cell Phone: (352) 217-8863 **E-Mail Address:** CMerrell-Kasch@bbandt.com

Check below the Committees or Boards that you are willing to serve on:

- [ ] Economic Development Advisory Committee
- [ ] Library Board
- [ ] Planning & Zoning Board
- [✓] Parks & Recreation Advisory Board
- [✓] Police Pension Board
- [ ] Tree & Beautification Advisory Committee

Occupation: Financial Center Leader

Training or experience related to activities of boards or committees to which appointment is sought: Bank officer, National Licensed Mortgage lender, Licensed Insurance Agent, 16 years in financial Industry, former Board member, Treasurer

Member of the following professional or business organizations: _____
United way volunteer, March of Dimes Volunteer, NCSAA

Have you served on a Town board or committee in the past? yes
If yes – name of committees/boards and dates Parks + Rec 2010-2011

Nationality: (optional) Caucasian (This information is for use in the Annual Florida Department of State Report only.)

Have you ever been convicted of a felony? (optional) NO

Please list three references that the Town may contact (excluding Town employees) – name, address and phone number:

1. Mike Burske
2. Carrie Jo Walls (352) 233-4128
3. Dawn Alexander (352) 787-5032

Additional information may be attached to this form.

I will attend meetings in accordance with the adopted policies of the Town. If at any time my business or professional interests conflict with the interests of this board or committee, I will not participate in such deliberations of the board or committee.

Connie Merrell Kasch

Signature of Applicant

Please return application to:

Town Clerk's Office
Lady Lake Municipal Complex
409 Fennell Blvd
Lady Lake FL 32159

Please note: You may be required to fill out a financial disclosure form.

THIS APPLICATION WILL BE KEPT ON FILE FOR ONE YEAR

Updated: 01-30-12

TOWN OF LADY LAKE
BOARDS/COMMITTEES APPLICATION

Date: 8-18-14

Name: Richard A. (Rick) Jones
(Doc)

Mailing Address: 725 Agua Way - Lady Lake, Fl. 32159

Location of residence: EL Cortez Village

Business Location (if applicable): NA
(Economic Development Advisory Committee only)

Home Phone: 352 409-0888 Work Phone: Same

Cell Phone: Same E-Mail Address: [redacted] peggyandricky@comcast.net

Check below the Committees or Boards that you are willing to serve on:

- [ ] Economic Development Advisory Committee
- [ ] Library Board
- [ ] Planning & Zoning Board
- [✓] Parks & Recreation Advisory Board
- [✓] Police Pension Board
- [ ] Tree & Beautification Advisory Committee

Occupation: Retired School Admnst Ed Consultant

Training or experience related to activities of boards or committees to which appointment is sought: Served on several boards in West Va. Supervise 39 Summer Playground sites for two summers work with many Law Enf. Agencies in WVA & Fl. Served on Lake Co. Grant Committees.

Member of the following professional or business organizations: NASSP (Ret.) Villages Rotary Club, National Notary Assoc.

Have you served on a Town board or committee in the past? Not in Fla.

If yes – name of committees/boards and dates Served on many committees in Char. West Va.

Nationality: (optional) Caucasian (This information is for use in the Annual Florida Department of State Report only.)

Have you ever been convicted of a felony? (optional) No

Please list three references that the Town may contact (excluding Town employees) – name, address and phone number:

1. Pete Wahl – Allende Ave – 751-0322
2. Randy McDaniel – Villages Charter School – 352-840-3027
3. Gary Lester – Lake Sumter Landing – 352-753-6706

Additional information may be attached to this form.

I will attend meetings in accordance with the adopted policies of the Town. If at any time my business or professional interests conflict with the interests of this board or committee, I will not participate in such deliberations of the board or committee.

Richard A. Jones

Signature of Applicant

Please return application to:

Town Clerk's Office
Lady Lake Municipal Complex
409 Fennell Blvd
Lady Lake FL 32159

Please note: You may be required to fill out a financial disclosure form.

THIS APPLICATION WILL BE KEPT ON FILE FOR ONE YEAR

Updated: 01-30-12

PARKS & RECREATION ADVISORY COMMITTEE

- VOTING FORM -

Date: March 2, 2015

Please mark your selection (1) and sign your name at the bottom.

Thank you.

Re-Appointment:

	Yes	No
Connie Merrell-Kasch	☐	☐

or

Appointment:

Richard (Rick) Jones	☐	☐

Selection made by: _____

(Name of Commissioner)

VOTED